Fiber Distributed Antenna System (Fiber DAS)

Operation Manual

©Copyright 2017 by Bird Technologies, Inc.
Instruction Book Part Number 920-Fiber-DAS Rev. P3

Delta Node® is a registered trademark of Delta Node Solutions Ltd. and Bird Technologies, Inc.

Safety Precautions

The following are general safety precautions that are not necessarily related to any specific part or procedure, and do not necessarily appear elsewhere in this publication. These precautions must be thoroughly understood and apply to all phases of operation and maintenance.

WARNING
Keep Away From Live Circuits
Operating Personnel must at all times observe general safety precautions. Do not replace components or make adjustments to the inside of the test equipment with the high voltage supply turned on. To avoid casualties, always remove power.

WARNING
Shock Hazard
Do not attempt to remove the RF transmission line while RF power is present.

WARNING
Do Not Service Or Adjust Alone
Under no circumstances should any person reach into an enclosure for the purpose of service or adjustment of equipment except in the presence of someone who is capable of rendering aid.

WARNING
Safety Earth Ground
An uninterruptible earth safety ground must be supplied from the main power source to test instruments. Grounding one conductor of a two conductor power cable is not sufficient protection. Serious injury or death can occur if this grounding is not properly supplied.

WARNING
Resuscitation
Personnel working with or near high voltages should be familiar with modern methods of resuscitation.

WARNING
Remove Power
Observe general safety precautions. Do not open the instrument with the power applied.

Safety Symbols

WARNING
Warning notes call attention to a procedure, which if not correctly performed, could result in personal injury.

CAUTION
Caution notes call attention to a procedure, which if not correctly performed, could result in damage to the instrument.

Note: *Calls attention to supplemental information.*

The laser used in this system is a Class 3b laser that produces invisible infra-red coherent light. Avoid looking into connected fibers and receptacles. Not safe to view with optical instruments. Always put the protection caps on unused fibers and receptacles.

Warning Statements

The following safety warnings appear in the text where there is danger to operating and maintenance personnel and are repeated here for emphasis.

WARNING
This is NOT a consumer device.
It is design for installation by **FCC LICENSEES** and **QUALIFIED INSTALLERS.** You **MUST** have an **FCC LICENSE** or express consent of an FCC licensee to operate this device. You MUST register Class B signal boosters (as defined in 47 CFR 90.219) online at www.fcc.gov/signal-boosters/registration. Unauthorized use may result in significant forfeiture penalties, including penalties in excess of $100,000 for each continuing violation.

See page 40

For CMRS 817-824MHz Applications and American Cellular Applications:

WARNING
This is NOT a consumer device.
It is design for installation by **FCC LICENSEES** and **QUALIFIED INSTALLERS.** You **MUST** have an **FCC LICENSE** or express consent of an FCC licensee to operate this device. Unauthorized use may result in significant forfeiture penalties, including penalties in excess of $100,000 for each continuing violation.

See page 40

WARNING
This is NOT a consumer device.
It is designed for installation by an installer approved by an ISED licensee.
You MUST have an ISED LICENCE or the express consent of an ISED licensee to operate this device.

See page 40

WARNING
Avoid looking into connected fibers and receptacles.
The laser used in this system is a Class 3b laser that produces invisible infra-red coherent light. Not safe to view with optical instruments. Always put the protection caps on unused fibers and receptacles.

See page 15

Caution Statements

The following equipment cautions appear in the text and are repeated here for emphasis.

CAUTION
Turn Off Test Tone
Do not forget to turn off the test tone when you are done with your uplink. Better check one extra time. They will otherwise interfere with the normal operation of the system by causing noise to the base station.

See page 114

CAUTION
Unauthorized antennas, cables, and/or coupling devices may cause non-conformity with national or international regulations, could cause damage, or non-conforming ERP/EIRP.

See page 41.

CAUTION
When mating RF connectors, ensure that they are properly aligned and not cross threaded.
Tighten SMA connectors to 8 in.-lbs.
Do over torque RF connectors, this could result in damage to the Unit.
Do not under torque RF connectors, this could result in poor signal transmission.

See page 47

Safety Statements

USAGE

ANY USE OF THIS INSTRUMENT IN A MANNER NOT SPECIFIED BY THE MANUFACTURER MAY IMPAIR THE INSTRUMENT'S SAFETY PROTECTION.

USO

EL USO DE ESTE INSTRUMENTO DE MANERA NO ESPECIFICADA POR EL FABRICANTE, PUEDE ANULAR LA PROTECCIÓN DE SEGURIDAD DEL INSTRUMENTO.

BENUTZUNG

WIRD DAS GERÄT AUF ANDERE WEISE VERWENDET ALS VOM HERSTELLER BESCHRIEBEN, KANN DIE GERÄTESICHERHEIT BEEINTRÄCHTIGT WERDEN.

UTILISATION

TOUTE UTILISATION DE CET INSTRUMENT QUI N'EST PAS EXPLICITEMENT PRÉVUE PAR LE FABRICANT PEUT ENDOMMAGER LE DISPOSITIF DE PROTECTION DE L'INSTRUMENT.

IMPIEGO

QUALORA QUESTO STRUMENTO VENISSE UTILIZZATO IN MODO DIVERSO DA COME SPECIFICATO DAL PRODUTTORE LA PROZIONE DI SICUREZZA POTREBBE VENIRNE COMPROMESSA.

SERVICE

SERVICING INSTRUCTIONS ARE FOR USE BY SERVICE - TRAINED PERSONNEL ONLY. TO AVOID DANGEROUS ELECTRIC SHOCK, DO NOT PERFORM ANY SERVICING UNLESS QUALIFIED TO DO SO.

SERVICIO

LAS INSTRUCCIONES DE SERVICIO SON PARA USO EXCLUSIVO DEL PERSONAL DE SERVICIO CAPACITADO. PARA EVITAR EL PELIGRO DE DESCARGAS ELÉCTRICAS, NO REALICE NINGÚN SERVICIO A MENOS QUE ESTÉ CAPACITADO PARA HACERIO.

WARTUNG

ANWEISUNGEN FÜR DIE WARTUNG DES GERÄTES GELTEN NUR FÜR GESCHULTES FACHPERSONAL.

ZUR VERMEIDUNG GEFÄHRLICHE, ELEKTRISCHE SCHOCKS, SIND WARTUNGSARBEITEN AUSSCHLIEßLICH VON QUALIFIZIERTEM SERVICEPERSONAL DURCHZUFÜHREN.

ENTRENTIEN

L’EMPLOI DES INSTRUCTIONS D’ENTRETIEN DOIT ÊTRE RÉSERVÉ AU PERSONNEL FORMÉ AUX OPÉRATIONS D’ENTRETIEN. POUR PRÉVENIR UN CHOC ÉLECTRIQUE DANGEREUX, NE PAS EFFECTUER D’ENTRETIEN SI L’ON N’A PAS ÉTÉ QUALIFIÉ POUR CE FAIRE.

ASSISTENZA TECNICA

LE ISTRUZIONI RELATIVE ALL’ASSISTENZA SONO PREVISTE ESCLUSIVAMENTE PER IL PERSONALE OPPORTUNAMENTE ADDESTRATO. PER EVITARE PERICOLOSE SCOSSE ELETTRICHE NON EFFETTUARRE ALCUNA RIPARAZIONE A MENO CHE QUALIFICATI A FARLA.

About This Manual

This manual covers the operating & maintenance instructions for the following models:

Fiber-DAS

Changes to this Manual

We have made every effort to ensure this manual is accurate. If you discover any errors, or if you have suggestions for improving this manual, please send your comments to our Solon, Ohio factory. This manual may be periodically updated. When inquiring about updates to this manual refer to the part number: 920-Fiber-DAS; and revision: P3.

Chapter Layout

Introduction — Describes the fundamentals of the Bird Fiber-DAS and provides a list of commonly used abbreviations and acronyms.

System Description — Describes the Major components that make up a Bird Fiber-DAS system.

Installation Guidelines — Provides FCC requirements and safety considerations when installing a Bird Fiber-DAS.

Commissioning — Lists the preparations and equipment required to successfully install and commission the Bird Fiber-DAS.

RF Commissioning — Chapter contains useful advice on how to design a well working system as well as examples for fine tuning link a budget and controlling noise in a Bird Fiber-DAS.

Model Identification — Provides a breakdown of the Bird part numbers for the Fiber-DAS systems. A table of part numbers used for Remote Units is also provided.

Table of Contents

Safety Symbols . . . ii
Warning Statements . . . iii
Caution Statements . . . iv
Safety Statements . . . v
Changes to this Manual . . . vii
Chapter Layout . . . vii

Chapter 1 Introduction . . . 1
RF on fiber . . . 1
Definitions . . . 2

Chapter 2 System Description. . . . 4
Gateways . . . 4
Central Gateway (CGW) . . . 4
Base Station Gateway (BGW) . . . 4
Remote Gateway (RGW) . . . 6
Headend . . . 6
DCS - Network Switch . . . 6
Master Frame Unit (MFU) . . . 7
Base Station Interface Unit (BIU) . . . 8
Interconnect Unit (ICU) . . . 13
Fiber Optic Interface (FOI) unit . . . 15
PSU – the rack power supply . . . 20
Remote Unit (RU) . . . 21
DDR . . . 22
DDS . . . 26
DDH . . . 28
DDU . . . 31
Remote Unit Frequency Summary . . . 32
DMU – Remote head end . . . 33
Repeaters . . . 34
DMR 400 Series Rack Mount Repeater . . . 34
DLR 600 Series Low Power Repeater . . . 36
DMR600 Series Medium Power Repeater . . . 37
DHR 800 Series High Power Repeater . . . 38
Bird Repeater Frequency Summary . . . 39

Chapter 3 Installation guidelines . . . 40
Health and Safety . . . 40
Cable Routing/Antenna Selection . . . 41
Antenna Installation . . . 41
Safety and Care for Fibers . . . 41
Tools and Material Requirements . . . 42
Fiber Optics . . . 42
Tools . . . 42
Miscellaneous Material . . . 42
Installing Headend Equipment . . . 43
BGW . . . 43
Ethernet Switch . . . 43
Master Unit . . . 44

Power Supply Unit . . . 45
BIU . . . 47
ICU . . . 48
FOI . . . 48
RFU . . . 49
Powering Up the Head End . . . 49
Installing Remote Units . . . 50
Single Remote Unit Wall Mounting . . . 50
Double Remote Unit Wall Mounting . . . 51
Remote Unit Pole Mounting . . . 51
Solar Shield . . . 52
Cabling . . . 52
Remote Unit Verification . . . 55
Installing the DHR Repeater . . . 56
Single Repeater Wall Mounting . . . 56
Double Repeater Wall Mounting . . . 57
Repeater Pole Mounting . . . 57
Solar Shield . . . 58
Cabling . . . 58

Chapter 4 DAS Software Configuration . . . 62

Ethernet Connection . . . 62
BGW Configuration . . . 63
BGW Naming . . . 63
EXT Ethernet . . . 63
VPN Settings . . . 64
Time Zone . . . 64
NTP Servers . . . 65
Email Server . . . 66
BIU Configuration . . . 67
BIU RF1 Status . . . 67
BIU RF1 Settings . . . 69
BIU Hardware Test Points . . . 70
BIU Alarm List . . . 70
BIU Change History . . . 71
BIU Alarm configuration RF1 . . . 71
BIU Advanced Network Setup . . . 72
BIU Advanced Menus . . . 72
BIU Application Handling . . . 73
BIU Reset to Factory Default . . . 73
FOI Configuration . . . 74
FOI Opto Status . . . 75
FOI Opto and Attenuator Settings . . . 77
FOI Fiber Network Subunits . . . 79
FOI Network Setup . . . 80
FOI Reset to Factory Default . . . 81
FOR . . . 81
RF Strip 1 XXX MHz Status . . . 82
RF Strip 1 XXX MHz Configuration . . . 83
FOR Opto Status . . . 85
FOR Opto Gain and Attenuation Settings . . . 87
FOR Fiber Network Settings . . . 88

FOR Application Handling . . . 89
Slave FOR . . . 89
Naming Components . . . 90
Moving Remotes to Different FOI Port . . . 92
Replacing Master Unit Cards . . . 92
Moving Master Unit Cards . . . 92

Chapter 5 Commissioning . . . 94
Preparations . . . 94
Necessary tools . . . 94
Software . . . 94
System Commissioning . . . 95
Pre-requisites . . . 95
Commissioning Process . . . 95
Bird VPN Access . . . 98
VPN Settings . . . 98
Wireless Modem Setup . . . 102
Modem DHCP . . . 102
Modem VPN Tunnels . . . 102
Modem Port Forwarding . . . 102
BGW Configuration . . . 102
Rolling Back Modem Configuration . . . 105
Setup local Network UDP Ports for CGW Access . . . 106
Local Connection to Remote Unit . . . 106
Local Connection to Remote Unit with Two FOR's . . . 107
Connection to BGW from Remote Unit . . . 108

Chapter 6 RF Commissioning . . . 109
Setting up the uplink . . . 109
Noise load on Radio Base Station . . . 110
Practical approach . . . 112

Chapter 7 Model Identification . . . 115
System Model Numbers . . . 115
Remote End Unit Part Numbers . . . 116
Public Safety DDR Module Numbers . . . 116
Cellular DDR Module Numbers . . . 116

Chapter I Introduction

The Bird fiber distributed antenna system (Fiber-DAS) was developed from the start with fiber-optic cable as the distribution medium. This allows for excellent radio performance and best in class system noise figure of less than 3 dB, from the remote unit antenna port to the base station interface port.

The Bird Fiber-DAS system is a flexible and scalable solution, meaning the system can be tailored for almost any requirement. This flexibility provides the user the ability to adjust many of the systems parameters to fit their specific needs.

This manual contains design, installation, and commissioning guidelines, as well as system maintenance practices. It also contains information regarding general practices within in the industry as well.

Fiber-DAS calculator — In addition to this manual, the Fiber-DAS calculator is an indispensable tool, this Excel spreadsheet includes the following features, providing insight to how well the system will perform:

- ✓ System Noise Figure calculator
- ✓ Intermodulation performance calculator
- ✓ Uplink / Downlink Balance
- ✓ Dynamic headroom

RF on fiber

A fiber distributed antenna system (Fiber-DAS) is an efficient method of transmitting radio signals over large distances. Our Fiber-DAS can provide as much as 30 km of fiber between the head-end and the remote unit, providing that the radio access technology used in the Radio Access Network (RAN) does not suffer timing issues and that the fiber loss is within the specification.

The Fiber-DAS uses an infra-red light source, modulated with the combined radio signals that need to be propagated. The fiber channel system is ultra wide-band, ranging from 88 MHz up to 2600 MHz, thus covering most types of radio communication systems including as FM broadcast, VHF communication radios, LTE, TETRA, GSM, CDMA, WCDMA and many other radio access technologies.

Most land mobile radio and cellular systems use Frequency Division Duplex (FDD) which means:

- Two separate fibers, one for the uplink (signals from the terminal towards the base station) and one for the downlink (signals from the radio base station towards the terminal)
- Or a single fiber and the signals must be multiplexed using different wavelengths.

Bird's Fiber-DAS uses wave-length division multiplexing (WDM) as the standard configuration featuring the following:.

- ✓ Single mode fiber
- ✓ Angled connectors
- ✓ Up to 15 dB optical loss

Note: *Separate UL/DL fibers can be used if it is necessary or desired.*

The dynamic of the fiber is good enough to tolerate multi-carrier, multi-band and multi-operator solutions, but they share the available dynamics and if there is a large number of carriers the fiber attenuation needs to be considered.

Because the modulation is analog the system requires the fibers to be of single mode type. All connectors used in Bird's Fiber-DAS equipment are SC-APC type with a 7° angle. It is important that all connectors (i.e. patches) between the Master Unit (MU) and the Remote Units (RU) be angled, otherwise reflections could result causing problems with the quality of the signals through the system.

Definitions

The following abbreviations, industry standard lingo and acronyms are used in this document.

BGW	Base station Gateway, see "Base Station Gateway (BGW)" on page 4
BIU	Base station interface. Also known as the DIU. It is the electrical interface between the Master Frame Unit (MFU) and the operator radio base station or another source for the radio signals, such as a off-air repeater. See "Base Station Interface Unit (BIU)" on page 8
BTS	See RBS.
DAS	A distributed antenna system. Several antennas connected together in a coaxial network so that several antennas can be fed a signal from a central location.
DL	See “Downlink”
Downlink	The signals that are transmitted from a base station towards a terminal (phone).
Fiber	In this document it refers to the telecommunication fibers used to transmit modulated light as pulses or analog variations on a glass fiber. The Bird Fiber-DAS system should use single-mode fiber always.
Fiber-DAS	A general name for distribution systems using radio frequency on fiber (RF on Fiber) technology. DAS means “Distributed Antenna System” which refers to the practice of building “spreading nets” with coaxial cables, splitters and antennas to cover larger structures.
FOI	Fiber-optic interface. See "Fiber Optic Interface (FOI) unit" on page 15
FOR	Fiber-optic remote interface, part of the Remote Unit connecting to the fiber.
GSM	Global System for Mobile Communications
iDEN	Integrated Digital Enhanced Network
LTE	Long Term Evolution
MFU	Master Frame Unit. This is a rack that contains all the modules that builds up to the head end in the system. This is where the radio base stations interface to the Fiber-DAS system. This is also where the downlink signals from the base stations are converted into laser light and sent over the fiber-optics to the Remote Unit (RU) and the uplink signals from the RU are converted to radio frequency signals and transmitted to the radio base station (RBS, BTS).
ICU	Interconnect Unit, RF splitter/combiner unit, see "Interconnect Unit (ICU)" on page 13
QMA	Quick connect/disconnect type of RF Connector. Replacement for SMA RF Connectors. See SMA
RBS	Radio Base Station. The infrastructure unit normally connected to the antennas in the radio access network (RAN) and sometimes called just Base Station or Base Transceiver Station (BTS).
RGW	Remote Gateway Unit, see "Remote Gateway (RGW)" on page 6
RU	Remote Unit. This is the unit closest to the antenna that converts the downlink signal from the fiber to radio frequencies and distributes it over the antenna system. In the reverse, the uplink radio frequencies are converted to modulated laser light and transmitted back to the MFU.
SC-APC	The type of connector used for all Bird optical equipment. It is recommended that all connectors between the MFU and the RU are of this type. SC-AP can also be accepted in patch panels. All connectors MUST BE ANGLED to avoid signal reflections that are detrimental to the signal quality. Fibers need to be of single-mode type.
Single mode fiber	A fiber where the light at a specified range of wavelengths only have a single path through. This is required for analogue modulated systems such as the Bird Fiber-DAS system
SMA	Sub-miniature version A. A Type of RF Connector.
Switch	A network switch is a computer networking device that connects devices together on a computer network.

TETRA	Terrestrial Trunked Radio. TETRA uses Time Division Multiple Access (TDMA) with four user channels on one radio carrier and 25 kHz spacing between carriers.
UL	See “Uplink”
UMTS	Universal Mobile Telecommunications System is a system where broadband signaling and packeted data are used. The standards are handled in the 3GPP group and the most common type of modulation is WCDMA.
Uplink	The signals that are transmitted from the terminal (phone) towards the base station.
SC-PC	A type of fiber-optic connector which is not angled and should not be used with Bird Fiber-DAS
SC-UPC	Ultra-polished fiber-optic connector. Not recommended with Bird Fiber-DAS
RF	Radio Frequencies, denominates the range of transversal electromagnetic waves with a frequency from 3 kHz to 300 GHz. The upper end of the spectrum is often referred to as microwave frequencies.
WCDMA W-CDMA	Wideband Code Division Multiple Access is a technology employed by base station manufacturers who make UMTS base stations. This technology is commonly used in 3G networks and the main modulation employed in Europe.

The Fiber-DAS system typically consists of three main segments:

Gateway — The Gateway acts as a firewall ensuring internal traffic on the system remains internal and at the same time allowing a web interface for monitoring and supervision. The gateway also handles SNMP traps.

Headend — The Headend serves as the interface with the operator's base station, housing the units required to transmit and receive communications between the operator's base station and the remote units of the Fiber-DAS system.

Remote Units — the remote units are located near the distributed antennas and house the equipment necessary to transmit and receive communications between the antenna and the headend.

Figure 1 Fiber-DAS System

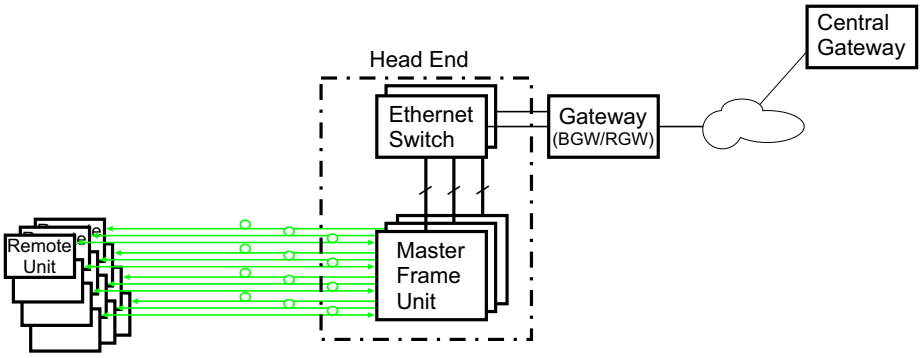

Gateways

The gateways offered include the Central Gateway (CGW), Base Station Gateway (BGW) and Remote Gateway (RGW).

For remote supervision of a Fiber-DAS a gateway (RGW or BGW) is installed. BGWs and RGWs are typically located with the headend equipment, the RGW is a smaller compact embedded solution while the BGW is a full featured Linux server that can be set up in many different ways.

CGWs are used for monitoring multiple Fiber-DAS systems, communicating with the BGWs and RGWs.

Central Gateway (CGW)

The CGW is used to provide a single remote access point and to compile alarms from multiple BGW/RGW networks. The unit is a self-powered Linux based server.

Base Station Gateway (BGW)

The BGW assigns IP addresses to all the modules in the Fiber-DAS system, including the Headend and Remote Units as well as their components.

The BGW is a self-powered Linux based server.

Features of the BGW:

- ✓ Web interface configuration
- ✓ Automatic detection of modules
- ✓ Automatic detection of Remote Units
- ✓ Capable of handling large systems
- ✓ Functions for statistics

- ✓ Northbound communication to CGW
- ✓ Includes firewall to protect local net
- ✓ Portal to your Master Unit
- ✓ User-provided certificate based security via HTTPS

Figure 2 Base Station Gateway

The BGW has two Ethernet ports - INT and EXT.

- The INT port is connected to the internal network in the headend's Master Unit to provide the local network for all the modules and the Remote Units. It also provides, via the built-in switch in the Master Unit, a way of locally configuring the network. It provides the web interface for all the settings of the system as well as many other functions.
- The EXT port is a "northbound" Ethernet port that allows the BGW to connect to the Internet, or a WAN/ MAN type of larger network. This means that the system can be monitored and managed remotely.

The BGW is the unit responsible for alarm handling and remote forward of alarms either by SMTP mail forwarding or by SNMP traps. A MIB file for your SNMP system is available from Bird upon request as well as documentation regarding SNMP.

If the BGW is replaced the Remote Units may not show up immediately. This is due to the lease time on the address they have. Eventually they will request a new address and when this is done they will show up.

The BGW can also launch VPN tunnels to a remote supervision center, the CGW. The CGW makes it possible to manage multiple systems from a single location.The CGW can handle a large number of such tunnels, providing a central point for supervising all the installations and collecting alarms and statistics from all the systems as well as centralized alarm management. The BGW can support a second VPN tunnel to the Bird management center providing supervision and management assistance, if needed.

Table 1 BGW Specifications

Parameter	Value
Input power voltage	100-240 VAC
Input power frequency	50 / 60 Hz
Operating temperature	10 to 30 °C (50 to 100 °F)
Power rating, Typical	< 100 W
Height	1 U
Width	19" (48.26 cm)
Depth	14.2" (36 cm
Weight	< 11 lbs. (5 kg)

Remote Gateway (RGW)

The RGW is a small unit similar to the BGW but intended for small systems where there are only a few remotes or where there is no headend. The RGW has a form factor that allows it to be mounted inside a repeater casing.

The RGW can be used to run up to 4 Remote Units from a single Repeater on a single Fiber. The RGW has the capability to connect northbound to a CGW, just like the BGW, and it can also forward alarms through a VPN tunnel to a CGW.

The memory capacity and features are reduced compared to the BGW but for a small system with a single fiber this is an option.

In remote locations without Ethernet, the RGW can be equipped with a modem to allow remote access to the system. Typically a 3G modem is used allowing a VPN tunnel from the RGW to a CGW, enabling supervision, monitoring and control of the system.

Headend

The headend consists of a 19-inch rack with modules that are selected depending on the system design. Generally all headend Units contain:

- Network switch - connects communication paths between the modules
- Interconnect Unit (ICU) - RF splitter/combiner (rack-mount unit or module in the MFU)
- Master Frame Unit (MFU), may contain some or all of the following:
  - ✓ Power supply
  - ✓ Base Station Interface Unit (BIU)
  - ✓ Fiber-Optic Interface card (FOI)
  - ✓ Repeater
  - ✓ ICU

A DHCP server built into the RGW and BGW will assign IP addresses to all the headend subunits in the rack and the Remote Units when they are connected to the system. The configuration is automatic and creates a protected sub-net for the system.

DCS - Network Switch

The network switch is an AC powered, 24-port switch with Spanning Tree Protocol (STP). The network switch provides an Ethernet link between the MFU and the BGW. Each card slot in the MFU has a dedicated Ethernet port, each port is connected to the network switch and the network switch is connected to the BGW.

A DC powered option is also available.

Actual network switch may be different from the image.

Master Frame Unit (MFU)

The Master Frame Unit (MFU) houses the Power Supplies, Base Station Interface Units (BIU), Interconnection Units (ICU), and Fiber-Optic Interface (FOI) cards. Figure 3 shows an MFU equipped with 3 BIUs, 6 FOIs and one Power Supply.

Figure 3 Master Frame Unit

Functional description

One MFU supports several modules, or combination of module types. The modules can be placed anywhere in the frame. There are 16 single slot card positions in each MFU, however module widths vary (see each module's specifications) so the number of module that will fit in an MFU depends on the module type. One MFU can house up to 4 power supplies, 8 ICUs, 8 wide BIUs, 16 slim BIUs, 16 FOIs, or combination of modules. See Table 2.

Each MFU requires at least one power supply, although the power supply does not need to be housed within the MFU. Quite often a system has more than one power supply and they are usually placed together in one MFU for easy access. Each MFU has two power input connectors, one primary and one redundant. A redundant power supply connected to an MFU ensures continued operation if one of the power supplies should fail.

The MFU contains two ventilation fans circulating ambient air through the units housed in the frame. These are high quality fans with a high mean time between failure (MTBF).

Each Module in the MFU are assigned an IP addresses via DHCP leases, modules inherit the MAC address from the backplane, this ensures that a new module inserted in the rack receives the same IP address as the one it is replacing, without the need of manual configuration.

Table 2 MFU Specifications

Parameter	Value
Power connector	Molex, 10 Pin
Ethernet connector	RJ45
Weight (without modules)	5.5 lbs (2.5 kg)
Temperature range, Operational	0 to 45 °C (32 to 113 °F)
Width	19" (48.3 cm)
Height	3 U, 5.25" (13.34 cm)
Depth	11.8" (30 cm)
Maximum number of each type of modules supported	
PSU	4
BIU (DBI3xx, DBI3xxC(compact))	8, 16
FOI (DOI401, DOI30x)	8, 16
ICU	8

Base Station Interface Unit (BIU)

The Base Station Interface Unit (BIU) is the interface between the operator's base station and the Fiber-DAS system. The primary purpose of the BIU is to adjust uplink and downlink signal levels.The BIU is powered from the MFU backplane and communicates via Ethernet with the BGW.

Figure 4 BIU Signal Flow

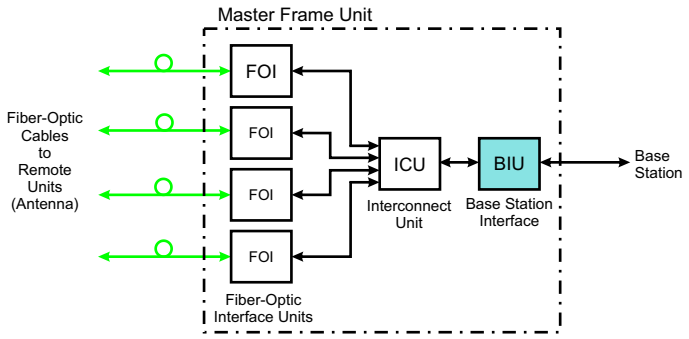

The BIU has uplink and downlink RF connectors on the front panel and is available in two variants, one containing duplex filters or one with separate uplink/downlink paths, depending on the needs for the connection to the base station. In most cases the duplexed version with a combined DL/UL ports is used.

In addition to duplexing options, there is a single slot and a dual version of the BIU:

- The DBI3xx (wide version) includes an external alarm connector (DB9) and requires two MFU slots.
- The DBI3xxC (compact version) does not have an external alarm connector (DB9) , and uses only one MFU slot.

Figure 5 Base Station Interface Unit (BIU)

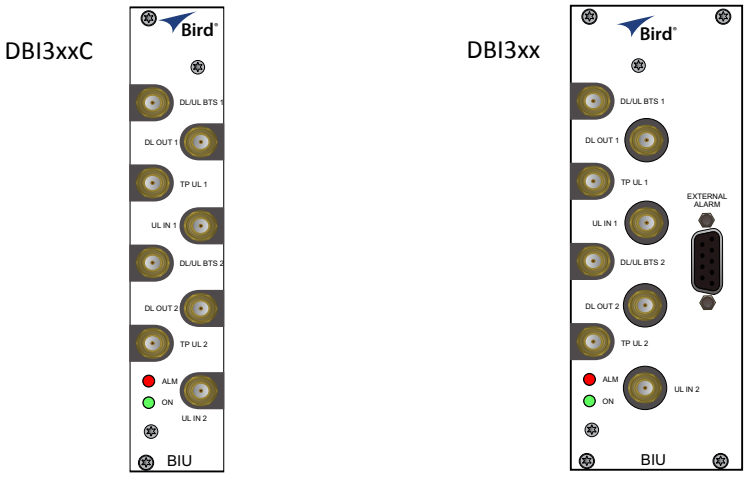

Functional description

The BIU has four SMA ports (female type) to connect the RBS/BTS.

- Duplexed versions have combined DL/UL connectors used to connect to the RBS, and there are UL test (TP) connectors that can be used to monitor the signal out from the BIU.
- Non-duplexed (simplex) versions have the test connectors replaced by UL connectors and the normally combined UL/DL connectors are replaced by DL only connectors.

The BIU has four QMA ports (female type) that are normally used to connect it to an ICU.

- There are two uplink (input) ports and two downlink (output, TX) ports.
- These are two separate paths, the isolation between DL 1 and DL 2 ports and the isolation between the UL 1 and UL 2 ports is > 50 dB.

There are two separate RF paths in the BIU. The BIU is configured for the specific frequency band it will serve. The two paths in the BIU cannot have different frequencies; a GSM 900 BIU will have two GSM 900 paths and cannot be combined with an 1800 path. Separate frequencies require the use of an additional BIU.

RF patch cables are used to patch the DL and UL paths (QMA) to the ICU.

The DBI 3xx (dual slot) BIU has an alarm output port (DB9 female connector) on the BIU which can be used to connect external alarms.

Table 3 Alarm Port Pinout

Pin	Signal (A)	Signal (B)
1	RS485+	RS485+
2	Alarm out 1	Alarm out 1
3	Ground	Ground
4	Not connected	Alarm in 2
5	Not connected	Alarm in 4
6	RS485+	RS485+
7	Alarm out 2	Alarm out 2
8	G	Alarm in 3
9	Not connected	Alarm in 1

The BIU is technology neutral and the downlink path contains settable attenuators that can be used to adjust the signal strength to proper levels before feeding them into the ICU. In the uplink there is an amplifier followed by a settable attenuator used to adjust the signal and the noise level into the base station uplink.

CAUTION

Overdriving the RF source input into the BIU will cause permanent equipment failure and will void the warranty. The installer must ensure that input levels are not exceeded. Plan for maximum power out of the RF source and attenuate accordingly with external attenuators if needed.

All RF connections are made on the front of the BIU. The maximum recommended input power to the BIU is 30 dBm. A high power alarm is activated at > 30 dBm and a low power alarm at < 10 dBm input power.

Input power above the recommended level can cause permanent unit failure. For high power base stations, an attenuator should be used to ensure that the input power to the BIU can never exceed specifications.

There is a 0 dBm input version of the BIU available on request.

BIU Type	Minimum DL Input	Maximum DL Input
Low Level	-7dBm	+7dBm
High Level	+20dBm	+33dBm

CAUTION

The UL from the FOI card is capable of damaging the UL port on the BIU. Maximum input to the BIU UL should be no higher than +13dBm. Use care to properly set FOI levels prior to enabling RF.

The schematic in Figure 6 shows one of the channels in the BIU. The signal detector for the downlink level alarms is shown in the top right corner.

The UL1 and UL2 uplink test ports are 3 dB lower than the signal on the corresponding DL/UL BTS port.

Figure 6 Schematic of One BIU RF Path

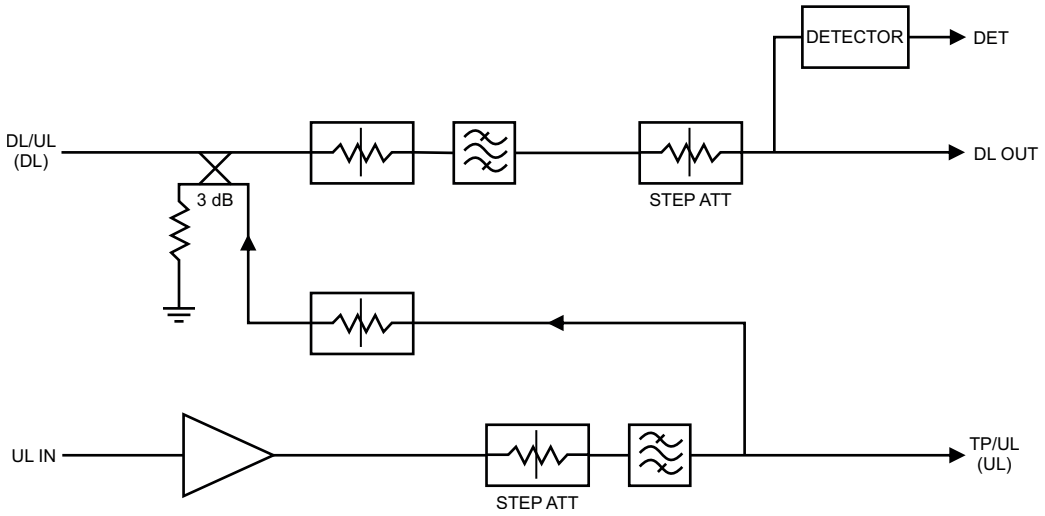

Table 4 lists standard cellular BIU's. Other configurations are available upon request as well as units without internal duplex filtering.

Table 4 Standard Variants of the BIU

Configuration	UL MHz	DL MHz	RF Input	High Level P/N	Low Level P/N
2 x VHF	136-174	136-174	Duplex	DBI312	DBI412
2 x TETRA 390 MHz†	380-385	390-395	Duplex	DBI301	DBI401
2 x UHF	450-470	450-470	Duplex	DBI313	DBI413
2 x 700 MHZ ABC-band	698-716	728-746	Duplex	DBI307	DBI407
2 x 700 Upper C	777-756	746-756	Duplex	DBI304	DBI404
2 x 700 Public Safety	799-805	769-775	Duplex	DBI314	DBI414
2 x SMR 800	806-824	851-869	Duplex	DBI303	DBI403
2 x 850 MHz	824-849	869-894	Duplex	DBI308	DBI408
2 x 800	832-862	791-821	Simplex	DBI305	DBI405
2 x GSM-R 900	876-880	921-925	Duplex	DBI310	-
2 x 900 MHz	880-915	925-960	Duplex	DBI309	DBI409
2 x 1800 MHz	1710-1785	1805-1880	Duplex	DBI318	DBI408
2 x 1900 MHz	1850-1915	1930-1995	Duplex	DBI319	DBI419
2 x UMTS 2100 MHz	1920-1980	2110-2170	Duplex	DBI320	DBI420
2 x AWS 2100 MHz	1710-1755	2110-2155	Duplex	DBI321	DBI421
2 x LTE 2600	2500-2570	2620-2690	Duplex	DBI326	DBI426

† Several options exists for 5 MHz standard bands for TETRA

Table 5 RF and Electrical Performance of the BIU

Parameter		Value	Unit
Downlink attenuation	Settable	10-30 ± 3	dB
Uplink Gain for modules < 1000 MHz	Settable	10 to 20 ± 3	dB
Uplink Gain for modules > 1000 MHz	Settable	-10 to 10 ± 3	dB
IM3 performance		> 55	dB
Max input non-destructive		> 36	dBm
High input alarm threshold level		33	dBm
Low input alarm threshold level		10	dBm
Input return loss		> 20	dB
Impedance for all RF ports		50	Ω
Isolation between ports		> 60	dB
Power consumption		< 15	W
Temperature range		0-45	°C

Table 6 BIU Mechanical Specifications

Parameter	Value
Base station RF ports	SMA, Female
Test ports uplink (if present)	SMA, Female
Interconnecting RF ports to ICU	QMA, Female
Alarm connector (optional)	DB9, Female
Module Width DBI3xx DBI3xxC(compact)	 2 Slots 1 slot

BIU Indicator Operation

There are two LEDs located on the BIU front panel. One is the power LED (green), the other is the alarm LED (red). Both LEDs indicate a number of states by different flashing sequences, see Table 7.

In an error state the web interface should be used to check the actual condition of the BIU but the LEDs can give a quick indication on the state of the unit. The LEDs are also useful for locating the physical unit if several BIUs are installed in the same rack.

Table 7 Indicator Behavior

State	ON LED	ALM LED	Note
Booting	2 Hz	Off	Normal boot
Booting standalone mode	2 Hz	2 Hz	Not attached to rack
Booting read of MAC address failed	2 Hz	On	Error
Starting	0,1 Hz 90%	0,1 Hz 90%	Kernel startup
Operation	0,5 Hz 10%	Off	Normal operation
Operation	0,5 Hz 10%	1 Hz 10%	Minor alarm state
Operation	0,5 Hz 10%	2 Hz 25%	Major alarm state
Operation	0,5 Hz 10%	On	Critical alarm state

Figure 7 BIU Interfaces

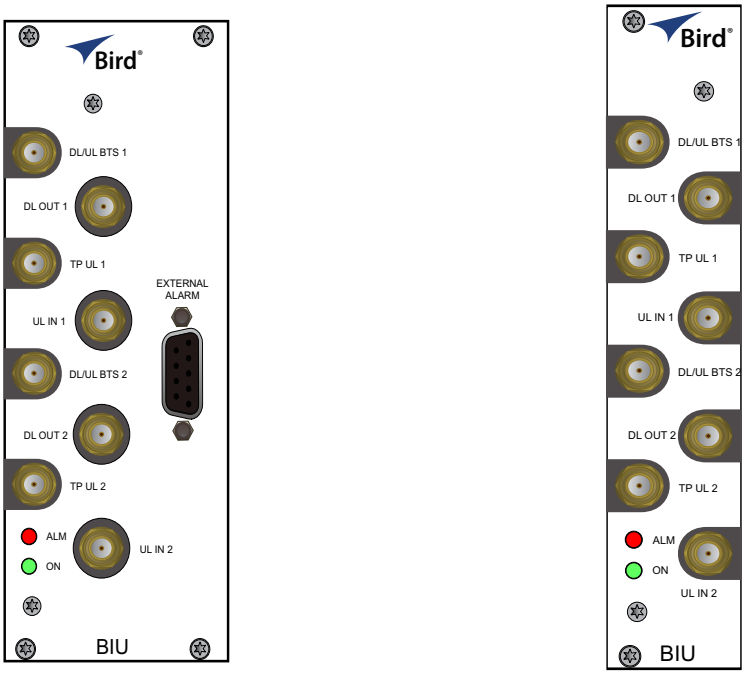

Item	Description
DL/UL BTS 1 / 2	Connection from the radio base station (RBS).
TP UL 1/2	Test port for the uplink of the DL/UL BTS port - 6 dB. The signal will be 3dBm below the DL/UL BTS port. Port is not valid on the simplex BIU.
DL OUT 1/2	Simplex downlink feed to the FOI.
UL IN 1/2	Simplex uplink from the FOI. The BIU will attenuate and/or amplify the signal and then route to the DL/UL BTS port.
EXTERNAL ALARMS	Used for external alarm monitoring (DBI3xx, two slot version only).
ON/ALM LED	The LEDs indicate various states, see Table 7.

Interconnect Unit (ICU)

Interconnect units (ICU) are used to couple signals between the BIUs and the FOIs.

The functional purpose of the ICU is:

- Downlink - Split the signal from the BIU and route the balanced signals (minus insertion loss) to the FOIs.
- Uplink - Combine the signals from the FOIs and route the sum of the signals (minus insertion loss) to the BIU.

The RF ports on the ICU are QMA.

Figure 8 Interconnect Unit Signal Flow

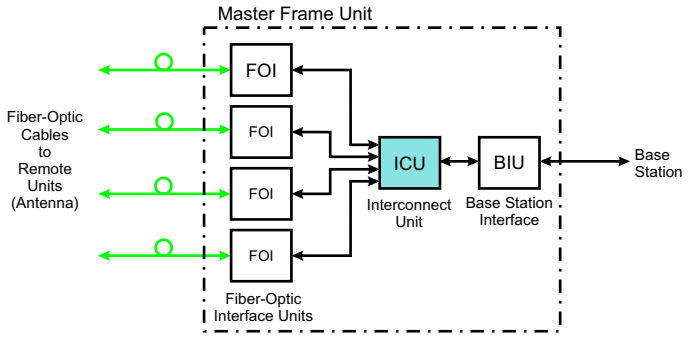

MFU ICU

The MFU ICUs are available in several different configurations to support a variety of system configurations. These units are inserted into the MFU and provide signal routing to and from the BIUs and FOIs.

Figure 9 MFU ICU

Rack-mount ICU (DIU301, DIU302)

The Rack-mount ICU is a 1U unit that contains four fields containing splitters/combiners. Each field is capable of splitting one input into eight outputs or combining eight inputs into one output.

Figure 10 Rack-mount ICU

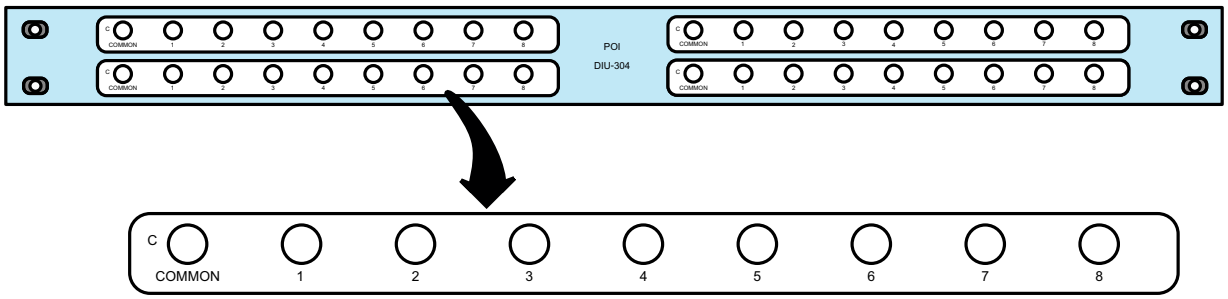

Each of the 4 fields has a COMMON port and ports 1-8.

- When used as a combiner, the signals to combine are connected to input ports 1-8, the sum of the signals (minus insertion loss) will be output on the COMMON port.
- When used as a splitter, the combined signal is input on the COMMON port and output on ports 1-8, with the output ports having balanced signals (minus insertion loss).

Table 8 Rack-mount ICU Specifications

Parameter	Value
Insertion loss (nominal) - DIU301	37 dB
Insertion loss (nominal) - DIU302	21 dB
Bandwidth - DIU301	88-2700 MHz
Bandwidth - DIU302	88-2700 MHz
Operating Temperature	-25 to +55 C (-13 to +131F)
Impedance	50 Ohm
IM3 performance	> 50 dB
Return loss performance	> 20 dB
Maximum common port power	20 dBm
Isolation between ports in same strip	> 15 dB
Isolation between ports in different strips	> 50 dB

QMA cable kit

A QMA cable kit (Bird part number DCC320) is available for use with the ICU. The kit contains 32 QMA to QMA cables (see Table 9) that can be used to patch between the BIU to the ICU, BIU to the FOI or ICU to FOI.

Table 9 QMA Cable Kit

Length	Quantity
250 mm (9.8”)	13
350 mm (13.8”)	13
500 mm (19.7”)	6

Fiber Optic Interface (FOI) unit

The FOI converts the RF signals in the downlink to fiber-optical laser output that is transmitted on the fiber to the remote unit. It also receives the laser light transmitted by the Remote Unit and converts it back to RF signals that are then routed to the ICU and/or BIU.

Figure 11 FOI Signal Flow

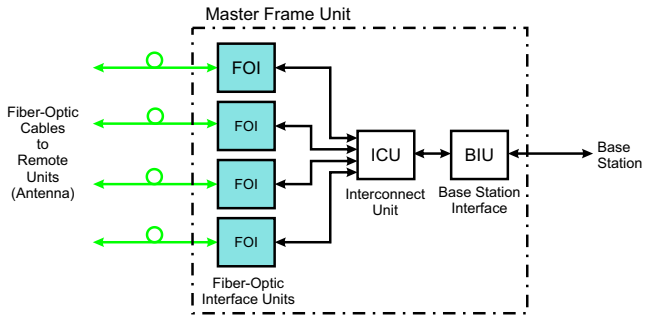

The FOI is powered from the MFU backplane and communicates via Ethernet with the BGW.

Figure 12 Fiber Optic Interface (FOI) Unit

WARNING

Avoid looking into connected fibers and receptacles.

The laser used in this system is a Class 3b laser that produces invisible infra-red coherent light. Not safe to view with optical instruments. Always put the protection caps on unused fibers and receptacles.

This interface is designed to work with SC-APC connectors (8° angled physical connector) and single mode fibers only. All connectors between the master unit and the remote unit must be APC, otherwise problems with reflections will arise, which could cause severe problems in the system.

The Ethernet communication between the Headend and the Remote Units takes place on two sub-carriers in the FOI where the Ethernet signals are superimposed on the RF signals.

As shown in Table 10, Bird offers two styles of FOI cards. The "DOI300 Series FOI" on page 16 and the "DOI401Series FOI" on page 19.

Table 10 FOI Variants

Parameter	Fiber Ports	Wavelength
DOI 301	2	1310 nm
DOI 302 (WDM)	1	1310 nm
DOI 308x	1	various wavelengths available
DOI401	4	1550 nm

DOI300 Series FOI

The DOI300 series supports a single fiber optic link. The fiber-optic interface can either be a WDM (DOI302) which is most commonly used or an optional duplex feed with separate UL and DL fibers (DOI301). Bird also offers a WDM option (DOI380x). The WDM utilizes the duplex feed style card but the wavelength for the downlink are defined by the "x" in the DOI380x part number. Note that the Remote Unit will need to be ordered with the correct WDM uplink wavelength. Refer to the chart for the WDM wavelengths offered.

DOI300 Series Serving Multiple Remotes

The DOI300 Series FOI can serve up to 4 Remote Units on a single fiber run when using an optical splitter in the first Remote Unit. When utilizing the DOI302 WDM module each Remote Unit in the series must have different optical wavelengths in the uplink path to avoid interference.

When utilizing optical splitters, the optical loss of the splitter must be accounted for in the optical link budget. The DOI300 series FOI has a maximum link budget of 15 dBo.

Figure 13 shows the allowed FOI to FOR/Remote configurations. Bird offers various splitter options for the FOR/Remote to help account for optical losses. The standard optical splitter will have balanced outputs for each path. Consult with Bird engineering for special applications.

Figure 13 FOI to Remote Unit Configurations

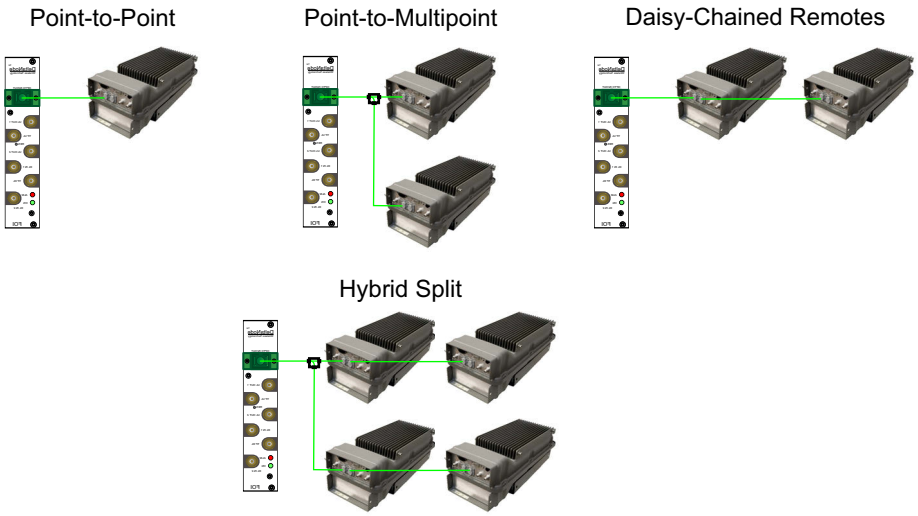

Functional description

The FOI has a nominal gain of 35 dB and the laser transmitter should see a maximum composite input power of 0 dBm. This means that for 0 dB attenuation in the downlink a maximum input of -35 dBm composite power is recommended (when attenuators are set to 0 dBm). If the downlink attenuator is set to a higher value the maximum recommended input is adjusted accordingly.

The output power of the laser is calibrated to 3000 µW. This can be used to check the loss over fiber in the remote because the remote reports the received optical levels. The loss may be different in the uplink compared to the downlink because of different wavelengths on the laser.

The FOI contains several adjustable attenuators which are used to compensate for loss before the FOI (e.g. in the ICU) and for loss on the fiber in the uplink. There are two sets of RF ports on the FOI that can be used to connect signals from two different strips in the rack-mount ICU, or two different MFU ICUs.

Figure 14 is a block diagram showing the downlink path in the FOI and how the test port is connected. There are two attenuators that can be set in the downlink path. This allows for balancing the input signals from two different signal sources so that they can share the dynamics of the laser properly.

Figure 14 FOI Downlink Block Diagram

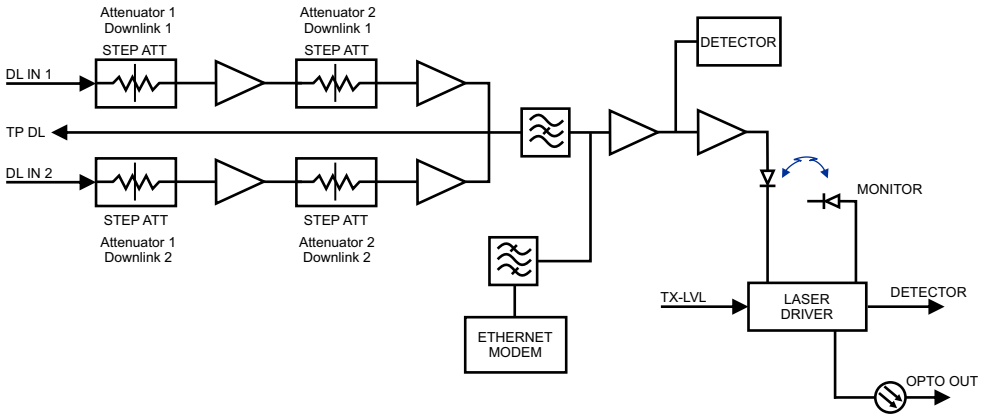

The RF drive levels are measured and accessible in the web interface.

TP DL is a test point measurement port for the downlink path. The RF level at TP DL will be the same as the input to the DL ports minus the GUI attenuator settings.

TP DL = “DL IN 1" minus “Att. 1 Downlink 1" minus “Att. 2 Downlink 1".

TP DL = “DL IN 2" minus “Att. 1 Downlink 2" minus “Att. 2 Downlink 2".

Example: Input into DL is -25dBm with the GUI setting for “Att. 1 Downlink 1" of 10 and a GUI setting for “Att 2 Downlink 1" of 0. The test point measurement will be: -25dB (input) minus 10dB (attenuator #1) minus 0dB (attenuator #2) = -35dBm.

Figure 15 is a block diagram showing the uplink path in the FOI and how the test port is connected. There are two common attenuators, and two uplink attenuators that can be set in the uplink path.

Figure 15 FOI Uplink Block Diagram

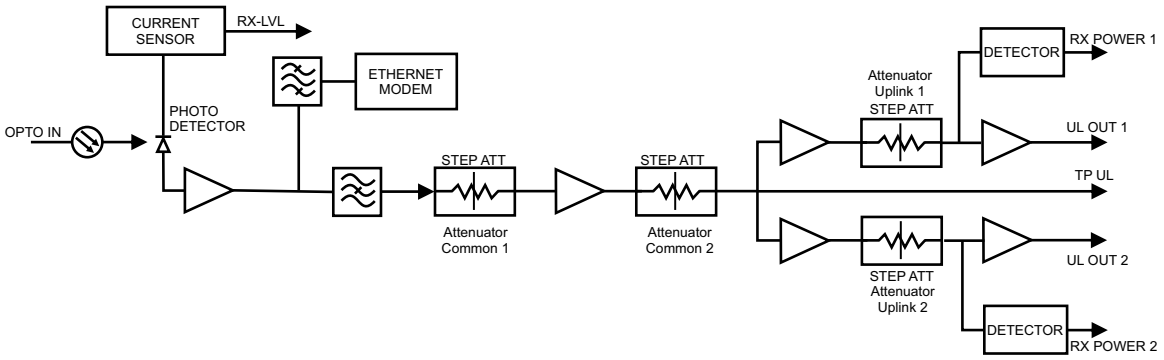

The UL test port on the FOI is tapped before the individual uplink path attenuators. The output level of TP UL will be:

TP/UL[dB] = “Att. Uplink 1" setting - 20dB

TP/UL[dB] = “Att. Uplink 2" setting - 20dB

Example: If the FOI GUI setting for “Att. Uplink 1" is 0, the test port uplink path 1 signals will be 20dB lower than the uplink signal on the “UL Out 1" port.

Example: If the FOI GUI setting for “Att. Uplink 2" is 20, the test port uplink path 2 signals will be equal to the uplink signals on “UL Out 2" port.

Figure 16 DOI301/302 Interfaces

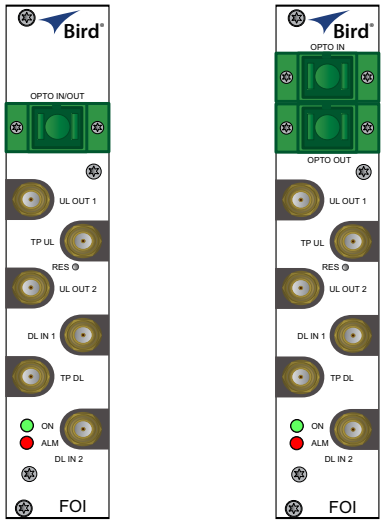

DOI302
With WDM

DOI301
Without WDM

Item	Description
OPTO IN/OUT	SC-APC connection for the optical fiber. DOI302 module with built in WDM has a single connector (combined RX/TX). DOI301 module without WDM has two connectors, one for TX and one for RX.
UL OUT 1/2	Uplink ports (QMA) to the ICU.
DL IN 1/2	Downlink ports (QMA) to the ICU.
TP UL/DL	Test ports (QMA) used to check the signal levels or noise in the system.

The two LEDs on the unit provide FOI status as shown in Table 11.

Table 11 FOI LED Indicators

State	ON LED	ALARM LED	Note
Booting	2 Hz	Off	Normal boot
Booting standalone mode	2 Hz	2 Hz	Not attached to rack
Booting read of MAC address failed	2 Hz	On	Error
Starting	0,1 Hz 90%	0,1 Hz 90%	Kernel startup
Operation	0,5 Hz 10%	Off	Normal operation
Operation	0,5 Hz 10%	1 Hz 10%	Minor alarm state
Operation	0,5 Hz 10%	2 Hz 25%	Major alarm state
Operation	0,5 Hz 10%	On	Critical alarm state

Table 12 DOI302 Specifications

Parameter	Value
Maximum fiber loss from MU to RU, Optical,	15 dBo
Optical output power, Calibrated	3 000 µW
Maximum number of RU supported on single fiber	4
Input RF power recommended, Composite	-50 to -35 dBm
Power consumption	< 15 W
Operational Temperature range	0 to 45 °C (32 to 133 °F)
Module Width	1 card slot
Optical connector type	SC-APC
RF connector type	QMA Female

DOI401Series FOI

The DOI401 four port FOI is very similar to DOI302 expect that it has four WDM optical ports instead of one. This allows the user to install dedicated fibers to each Remote Unit without having to balance optical splitter link budgets for each remote in a group. The balanced splitter loss is accounted for in the 7 dBo link budget of the DOI401. Unlike the DOI302, the DOI401 does not require the UL optical signals to be on different wavelengths.

Figure 17 DOI401 Interfaces

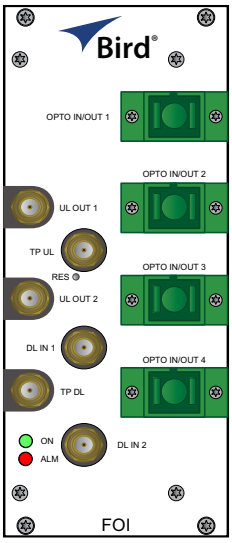

Item	Description
OPTO IN/OUT	SC-APC connections for the optical fiber.
UL OUT 1/2	Uplink ports to the ICU/BIU.
DL IN 1/2	Downlink ports to the ICU/BIU.
TP UL/DL	Test ports used to check the signal levels or noise in the system.

Table 13 DOI401 Specifications

Parameter	Value
Maximum fiber loss from MU to RU, Optical,	7 dBo
Optical output power, Calibrated	3 000 µW
Maximum number of RU supported on single fiber	1
Input RF power recommended, Composite	-50 to -35 dBm
Power consumption	< 20 W
Operational Temperature range	0 to 45 °C (32 to 133 °F)
Module Width	2 card slot
Optical connector type	SC-APC
RF connector type	QMA Female

PSU – the rack power supply

The Power Supply Unit provides DC power to the Master Unit backplane. The unit is shipped as 240 VAC or 115 VAC units depending on the country. A -48 VDC input is offered as an option.

Figure 18 PSU

AC Power Supply

DC Power Supply

Functional description

The AC power supply can handle up to 16 cards or one chassis full of cards. The DC power supply is capable of handling 11 cards or one full chassis that includes the DC power supply.

All connectors are on the front side of the power supply. Figure 18 shows the PSU equipped with European power inlet.

The PSU outputs are two 10-pin Molex connectors, these are connected to the chassis to supply power. One connector should always be connected to the chassis holding the PSU (for driving the fans).

One chassis can hold up to 4 power supplies. Two PSU's may be connected to a chassis to provide redundancy.

Table 14 PSU Specifications

Parameter	Value
Input power voltage, Mains	86-264 VAC
Input power frequency, Mains	50 / 60 Hz
Operating temperature	0 to 45 °C (32 to 113 °F)
Power rating	240 W
Width	4 card slots

Remote Unit (RU)

Remote units are available in a wide range of frequencies, gain and output power to cater to support a variety of requirements. Remote units are also capable of supporting more than one frequency band in a single unit.

Chassis types

Remote units (RUs) are available in two chassis, a single compact chassis for 1-2 bands and a dual chassis for up to 4 bands (Figure 19). There are multiple configurations that allow for various power level of amplifiers to be placed into the chassis. Table 15 shows how the chassis may be configured:

Table 15 Chassis Types

Chassis type	Low	Medium	High
Single chassis	1-2	1-2	1
Dual chassis	3-4	3-4	2

It is possible to have combinations of the above. For example it is possible to build a dual chassis with 2 medium power bands and 1 high power band in the same remote. Each side of a dual chassis is virtually identical to a single chassis remote unit. This ensures unparalleled flexibility when building multiple operator / multiple band solutions.

A dual chassis may have 1-2 fiber optical remote units (FOR). This allows for redundant fiber feeds, multiple-input and multiple-output (MIMO) applications, and dedicated amplifiers.

Figure 19 Remote Unit Chassis Types

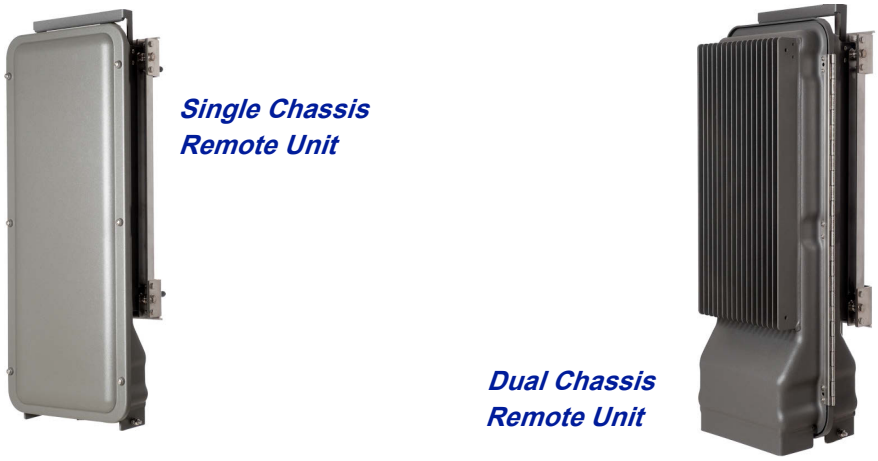

All Remote Units have an excellent noise figure, contributing to an overall noise figure for the whole system from remote to head-end into the base station of < 3 dB for the RF link.

Both chassis comply with IP65 protection for use in any environment. The durable coating assists in convection cooling. No fans are used for the Remote Units.

> **Note:** *The heat generated by the Remote Units when powered up is used to prevent water ingress into units. Remote units must remain powered on when mounted outdoors.*

Both wall or pole mounting kits are available for chassis mounting.

Table 16 contains a list of the most common remote units that are used with the Bird Fiber-DAS system. Variants are available upon request.

Table 16 Remote Comparison Table

Product code	Pout (ETSI)†	Pout (FCC)	Bands
DDR (medium power). See "DDR" on page 22.	26-30	36	1-4
DDS (High power quad band). See "DDS" on page 26.		41	1-4
DDH (high power). See "DDH" on page 28.	32-43	43	1-2
DDU (high power). See "DDU" on page 31.		46	1-2

† Actual power determined by frequency band and spectrum demands.

DDR

ETSI standard

Bird's Distributed Radio head is a high performing wideband radio head equipped with a linear power amplifier supporting all modulations. The light weight, convection cooled IP65 chassis secures the performance in almost any environment.

Table 17 General Specifications

Noise Figure, Typical	3 dB
Delay excluding optical fiber	< 0.5 µs
Power Supply Standard Optional	 85 to 264 VAC -32 to -100 VDC
Operating Temperature	-25 to 55 °C (32 to 113 °F)
Casing	IP65

Table 18 Specifications DDR100 (Single Band) & DDR200 (Dual band)

Power Consumption, max, DDR 100 (200)	90 (180) W
Dimensions, W x D x H	11.8 x 5.1 x 27.6 in. 30 x 13 x 70 cm
Weight	< 26.4 lbs (12 kg)

Table 19 Specifications DDR300(Triple Band) & DDR400(Quad Band)

Power Consumption, max, DDR 300 (400)	270 (360) W
Dimensions, W x D x H	11.8 x 8.7 x 27.6 in. 30 x 22 x 70 cm
Weight	< 52.9 lbs (24 kg)

Cellular Products

Table 20 Available Products, ETSL

System	UL Frequency MHz	DL Frequency MHz	Pout (DL) dBm/c, 1 Carrier	Pout (DL) dBm/c, 2 Carriers	Standard
TETRA, Public Safety	380 - 385	390 - 395	26	23	ETSI
TETRA, Commercial	410 - 415	420 - 425	26	23	ETSI
TETRA, Commercial	415 - 420	425 - 430	26	23	ETSI
CDMA450	452.5 - 457.5	462.5 - 467.5	33	28	FCC
GSM-R	876 - 880	921 - 925	26	23	ETSI
EGSM900	880 - 915	925 - 960	26	23	ETSI
GSM1800	1710 - 1785	1805 - 1880	28	25	ETSI
UMTS	1920 - 1980	2110 - 2170	30	25	3GPP

FCC/IC standard

Bird's Distributed Radio head is a high performing wideband radio head equipped with a linear power amplifier supporting all modulations. The light weight, convection cooled IP65 chassis secures the performance in almost any environment.

Table 21 General Specifications

Noise Figure, Typical	3 dB
Delay excluding optical fiber	< 0.5 µs
Power Supply Standard Optional	 85 – 264 VAC -32 to -100 VDC
Operating Temperature	-25 to 55 °C (32 to 113 °F)
Casing	IP65

Table 22 Specifications DDR100 (Single Band) & DDR200 (Dual band)

Power Consumption, max, DDR 100 (200)	90 (180) W
Dimensions, W x D x H	11.8 x 5.1 x 27.6 in. 30 x 13 x 70 cm
Weight	< 26.4 lbs (12 kg)

Table 23 Specifications DDR300 (Triple Band) & DDR400 (Quad Band)

Power Consumption, max, DDR 300 (400)	270 (360) W
Dimensions, W x D x H	11.8 x 8.7 x 27.6 in. 30 x 22 x 70 cm
Weight	< 52.9 lbs (24 kg)

Cellular Products

Table 24 Available Products, FCC/IC

System	UL Frequency MHz	DL Frequency MHz	Pout, DL, dBm (Composite)	Standard
LTE LB	698 - 716	728 - 746	33	FCC/IC
LTE UB	746 -776†	776 – 806†	33	FCC/IC
iDEN	806 - 824	851 - 869	33	FCC/IC
Cellular	824 - 849	869 - 894	33	FCC/IC
PCS1900	1850 - 1915	1930 - 1995	33	FCC/IC
AWS	1710 - 1780	2110 - 2180	33	FCC/IC
WCS 2300	2305 - 2315	2350 - 2360	33	FCC/IC
IMT-E	2500 - 2570	2620 - 2690	33	FCC/IC

† Sub-bands available

Class B Industrial Booster — This equipment is a Class B Industrial Booster and is restricted to installation as an In-building Distributed Antenna System (DAS).

FCC RF Exposure — This equipment complies with the FCC RF radiation exposure limits set forth for an uncontrolled environment. This equipment should be installed and operated with the following minimum distances between the radiator and your body:

LTE 700 MHz (DDR700)	204.7 cm
iDEN 800MHz (DDR850)	173.0 cm
PCS 1900MHz (DDR1900)	142.9 cm
AWS-1 2100MHz (DDR2100)	134.9 cm
AWS-3 2155MHz (DDRAWS3)	97.7 cm
WCS 2300 MHz	97.7 cm

If system will operate on multiple bands, the separation distance required shall be equal to, or greater than, the band with the largest separation distance.

IC RF Exposure — Equipment operating in the Cellular band should be installed and operated with the following minimum distance of between the radiator and your body:

LTE 700 MHz (DDR700)	269.0 cm
iDEN 800MHz (DDR850)	269.7 cm
PCS 1900MHz (DDR1900)	197.3 cm
AWS-1 2100MHz (DDR2100)	171.4 cm
AWS-3 2155MHz (DDRAWS3)	138.6 cm
WCS 2300 MHz	135.5 cm
IMT-E 2600MHz (DDR2600)	166.1 cm

If system will operate on multiple bands, the separation distance required shall be equal to, or greater than, the band with the largest separation distance.

The Manufacturer's rated output power of this equipment is for single carrier operation. For situations when multiple carrier signals are present, the rating would have to be reduced by 3.5 dB, especially where the output signal is re-radiated and can cause interference to adjacent band users. This power reduction is to be by means of input power or gain reduction and not by an attenuator at the output of the device.

IC RF exposition — FL'équipement fonctionnant dans la bande cellulaire doit être installé et utilisé avec la distance minimale suivante entre le radiateur et votre corps:

LTE 700 MHz (DDR700)	269.0 cm
iDEN 800MHz (DDR850)	269.7 cm
PCS 1900MHz (DDR1900)	197.3 cm
AWS-1 2100MHz (DDR2100)	171.4 cm
AWS-3 2155MHz (DDRAWS3)	138.6 cm
WCS 2300 MHz	135.5 cm
IMT-E 2600MHz (DDR2600)	166.1 cm

Si le système fonctionne sur plusieurs bandes, la distance de séparation requise est égale ou supérieure à la bande avec la plus grande distance de séparation.

Nominale de puissance de sortie du fabricant de cet équipement est pour un fonctionnement à une seule porteuse. Pour des situations où les signaux porteurs multiples sont présents, la cote devrait être réduite de 3,5 dB, en particulier lorsque le signal de sortie est re-rayonnée et peut provoquer des interférences avec les utilisateurs de bandes adjacentes. Cette réduction de puissance est effectuée au moyen d'une puissance d'entrée ou la réduction de gain, et non par un atténuateur à la sortie du dispositif.

Public Safety Products

Table 25 Available Products, FCC/IC

System	UL Frequency MHz	DL Frequency MHz	Pout, DL, dBm (Composite)	Nominal Bandwidth MHz	Nominal Passband Gain dB	Input/ Output Impedance Ohms	Standard
VHF	138-174	138-174	33	24(FCC); 36 (IC)†	70	50	FCC/IC
UHF	450-512	450-512	33	62††	70	50	FCC/IC
700	793-805	763-775	33	12	70	50	FCC/IC
800	806-824	851-869	33	18	70	50	FCC/IC

† 2MHz with required external duplexers

†† 3MHz tor 1.5 MHz with required external duplexers

Class B Industrial Booster — This equipment is a Class B Industrial Booster and is restricted to installation as an In-building Distributed Antenna System (DAS).

FCC RF Exposure — This equipment complies with the FCC RF radiation exposure limits set forth for an uncontrolled environment. This equipment should be installed and operated with the following minimum distances between the radiator and your body.

VHF public safety band	69.1 cm - This distance must be maintained when a 10.5dBi antenna is used.
UHF public safety band	20.0 cm
700MHz public safety band	36.2 cm - This distance must be maintained when a 5.5dBi antenna is used.
800MHz public safety band	20.0 cm

If system will operate on multiple bands, the separation distance required shall be equal to, or greater than, the band with the largest separation distance.

IC RF Exposure — Equipment operating in the public safety band should be installed and operated with the following minimum distance of between the radiator and your body:

VHF public safety band (DDR-V)	261.5 cm - This distance must be maintained when a 10.5dBi antenna is used.
UHF public safety band (DDR-U)	224.0 cm
700MHz public safety band (DDR-F)	187.0 cm - This distance must be maintained when a 5.5dBi antenna is used.
800MHz public safety band (DDR-S)	181.0 cm

If system will operate on multiple bands, the separation distance required shall be equal to, or greater than, the band with the largest separation distance.

The Manufacturer's rated output power of this equipment is for single carrier operation. For situations when multiple carrier signals are present, the rating would have to be reduced by 3.5 dB, especially where the output signal is re-radiated and can cause interference to adjacent band users. This power reduction is to be by means of input power or gain reduction and not by an attenuator at the output of the device.

IC RF exposition — L'équipement fonctionnant dans la bande de sécurité publique doit être installé et utilisé avec la distance minimale suivante entre le radiateur et votre corps:

VHF bande de sécurité publique (DDR-V)	261.5 cm - Sa distance doit être maintenue lorsqu'une antenne de 10,5 dBi est utilisée.
UHF bande de sécurité publique (DDR-U)	224.0 cm
700MHz bande de sécurité publique (DDR-F)	187.0 cm - Sa distance doit être maintenue lorsqu'une antenne de 10,5 dBi est utilisée.
800MHz bande de sécurité publique (DDR-S)	181.0 cm

Si le système fonctionne sur plusieurs bandes, la distance de séparation requise est égale ou supérieure à la bande avec la plus grande distance de séparation.

Nominale de puissance de sortie du fabricant de cet équipement est pour un fonctionnement à une seule porteuse. Pour des situations où les signaux porteurs multiples sont présents, la cote devrait être réduite de 3,5 dB, en particulier lorsque le signal de sortie est re-rayonnée et peut provoquer des interférences avec les utilisateurs de bandes adjacentes. Cette réduction de puissance est effectuée au moyen d'une puissance d'entrée ou la réduction de gain, et non par un atténuateur à la sortie du dispositif.

DDS

Bird's DDS series distributed high power radio head is a high performing wideband radio head equipped with a Pre Distortion power amplifier that supports all modulations. The light weight, convection cooled IP65 chassis secures the performance in almost any environment.

FCC/IC Standard

Table 26 General Specifications

Noise Figure, Typical	3 dB
Delay excluding optical fiber	< 0.5 µs
Instantaneous Band Width, Max	15 MHz
Power Supply Standard Optional	 85 – 264 VAC -32 to -100 VDC
Operating Temperature	-25 to 55 °C (32 to 113 °F)
Casing	IP65

Table 27 Specifications DDS100 (Single Band) & DDS200 (Dual band)

Power Consumption, max, DDS100 (200)	90 (180) W
Dimensions, W x D x H	11.8 x 5.1 x 27.6 in. 30 x 13 x 70 cm
Weight	< 26.4 lbs (12 kg)

Table 28 Specifications DDS300 (Triple Band) & DDS400(Quad Band)

Power Consumption, max, DDS300 (400)	270 (360) W
Dimensions, W x D x H	11.8 x 8.7 x 27.6 in. 30 x 22 x 70 cm
Weight	< 52.9 lbs (24 kg)

Cellular Products

Table 29 Available Products, FCC/IC

System	UL Frequency MHz	DL Frequency MHz	Downlink Power RMS	Standard
LTE LB	698 - 716	728 - 746	41	FCC/IC
LTE UB	746 -776†	776 – 806†	41	FCC/IC
850	824 - 849	869 - 894	41	FCC/IC
PCS1900	1850 - 1915	1930 - 1995	41	FCC/IC
AWS	1710 - 1755	2110 - 2155	41	FCC/IC

† Sub-bands available

Class B Industrial Booster — This equipment is a Class B Industrial Booster and is restricted to installation as an In-building Distributed Antenna System (DAS).

FCC RF Exposure — This equipment complies with the FCC RF radiation exposure limits set forth for an uncontrolled environment. This equipment should be installed and operated with the following minimum distances between the radiator and your body:

LTE LB 700 MHz	310.9 cm
LTE UB 700 MHz	349 cm
850MHz	323 cm
PCS 1900MHz	246 cm
AWS 2100MHz	246 cm

If system will operate on multiple bands, the separation distance required shall be equal to, or greater than, the band with the largest separation distance.

IC RF Exposure — Equipment operating in the Cellular band should be installed and operated with the following minimum distance of between the radiator and your body:

LTE LB 700 MHz	445.1 cm
LTE UB 700 MHz	501 cm
850MHz	475 cm
PCS 1900MHz	362 cm
AWS 2100MHz	351 cm

If system will operate on multiple bands, the separation distance required shall be equal to, or greater than, the band with the largest separation distance.

The Manufacturer's rated output power of this equipment is for single carrier operation. For situations when multiple carrier signals are present, the rating would have to be reduced by 3.5 dB, especially where the output signal is re-radiated and can cause interference to adjacent band users. This power reduction is to be by means of input power or gain reduction and not by an attenuator at the output of the device.

IC RF exposition — FL'équipement fonctionnant dans la bande cellulaire doit être installé et utilisé avec la distance minimale suivante entre le radiateur et votre corps:

LTE LB 700 MHz	445.1 cm
LTE UB 700 MHz	501 cm
850MHz	475 cm
PCS 1900MHz	362 cm
AWS 2100MHz	351 cm

Si le système fonctionne sur plusieurs bandes, la distance de séparation requise est égale ou supérieure à la bande avec la plus grande distance de séparation.

Nominale de puissance de sortie du fabricant de cet équipement est pour un fonctionnement à une seule porteuse. Pour des situations où les signaux porteurs multiples sont présents, la cote devrait être réduite de 3,5 dB, en particulier lorsque le signal de sortie est re-rayonnée et peut provoquer des interférences avec les utilisateurs de bandes adjacentes. Cette réduction de puissance est effectuée au moyen d'une puissance d'entrée ou la réduction de gain, et non par un atténuateur à la sortie du dispositif.

DDH

Bird's Distributed High power radio head is a high performing wideband radio head equipped with a feed forward multi carrier power amplifier that supports all modulations. The light weight, convection cooled IP65 chassis secures the performance in almost any environment.

ETSI standard

Table 30 General Specifications

Noise Figure, Typical	3 dB
Delay excluding optical fiber	< 0.5 µs
Power Supply Standard Optional	 85 – 264 VAC -32 to -100 VDC
Operating Temperature	-25 to 55 °C (32 to 113 °F)
Casing	IP65

Table 31 Specifications DDH100 (Single Band)

Power Consumption, max, DDH100	210 W
Dimensions, W x D x H	11.8 x 5.1 x 27.6 in. 30 x 13 x 70 cm
Weight	< 30.8 lbs (14 kg)

Table 32 Specifications DDH200 (Dual Band)

Power Consumption, max, DDS200	420 W
Dimensions, W x D x H	11.8 x 8.7 x 27.6 in. 30 x 22 x 70 cm
Weight	< 61.7 lbs (28 kg)

Cellular Products

Table 33 Available Products, ETSI

SYSTEM	Number of carriers					
	2		4		8	
	Composite Power	Power per carrier	Composite Power	Power per carrier	Composite Power	Power per carrier
TETRA	32	29	33	27		
CDMA450	32	29	33	27		
GSM-R	37	34	40	34		
DD 800	37	34	33	27		
EGSM900	40	34	40	34	40	31
GSM1800	40	37	40	34	40	31
UMTS	43	40	43	37	43	34
2600	43	40	43	37	43	34

FCC standards

Table 34 General Specifications

Noise Figure, Typical	3 dB
Delay excluding optical fiber	< 0.5 µs
Instantaneous Band Width, Max	15 MHz
Power Supply Standard Optional	 85 – 264 VAC -32 to -100 VDC
Operating Temperature	-25 to 55 °C (32 to 113 °F)
Casing	IP65

Table 35 Specifications DDH100 (Single Band)

Power Consumption, max, DDH100	210 W
Dimensions, W x D x H	11.8 x 5.1 x 27.6 in. 30 x 13 x 70 cm
Weight	< 30.8 lbs (14 kg)

Table 36 Specifications DDH200 (Dual Band)

Power Consumption, max, DDS200	420 W
Dimensions, W x D x H	11.8 x 8.7 x 27.6 in. 30 x 22 x 70 cm
Weight	< 61.7 lbs (28 kg)

Cellular Products

Table 37 Available Products, FCC/IC

System	UL Frequency MHz	DL Frequency MHz	Pout, DL, dBm (RMS)	Standard
LTE LB	698 - 716	728 - 746	43	FCC/IC
LTE UB	746 -776†	776 – 806†	43	FCC/IC
iDEN	806 - 824	851 - 869	40	FCC/IC
Cellular	824 - 849	869 - 894	43	FCC/IC
PCS1900	1850 - 1915	1930 - 1995	43	FCC/IC
AWS	1710 - 1780	2110 - 2180	43	FCC/IC
2600 LTE	2620 - 2690	2500 - 2570	43	FCC/IC

† Sub-bands available

Note: *All specifications subject to change without notice.*

Class B Industrial Booster — This equipment is a Class B Industrial Booster and is restricted to installation as an In-building Distributed Antenna System (DAS).

Note: *RF exposure distances are calculated using a 17 dBi antenna*

FCC RF Exposure — This equipment complies with the FCC RF radiation exposure limits set forth for an uncontrolled environment. This equipment should be installed and operated with the following minimum distances between the radiator and your body:

2600 LTE (DDH 2600)	309 cm
AWS3 (DDHAWS3)	309 cm

If system will operate on multiple bands, the separation distance required shall be equal to, or greater than, the band with the largest separation distance.

IC RF Exposure — Equipment operating in the Cellular band should be installed and operated with the following minimum distance of between the radiator and your body:

2600 LTE (DDH 2600)	410.1 cm
AWS3 (DDHAWS3)	438.4 cm

If system will operate on multiple bands, the separation distance required shall be equal to, or greater than, the band with the largest separation distance.

The Manufacturer's rated output power of this equipment is for single carrier operation. For situations when multiple carrier signals are present, the rating would have to be reduced by 3.5 dB, especially where the output signal is re-radiated and can cause interference to adjacent band users. This power reduction is to be by means of input power or gain reduction and not by an attenuator at the output of the device.

IC RF exposition — FL'équipement fonctionnant dans la bande cellulaire doit être installé et utilisé avec la distance minimale suivante entre le radiateur et votre corps:

2600 LTE (DDH 2600)	410.1 cm
AWS3 (DDHAWS3)	438.4 cm

Si le système fonctionne sur plusieurs bandes, la distance de séparation requise est égale ou supérieure à la bande avec la plus grande distance de séparation.

Nominale de puissance de sortie du fabricant de cet équipement est pour un fonctionnement à une seule porteuse. Pour des situations où les signaux porteurs multiples sont présents, la cote devrait être réduite de 3,5 dB, en particulier lorsque le signal de sortie est re-rayonnée et peut provoquer des interférences avec les utilisateurs de bandes adjacentes. Cette réduction de puissance est effectuée au moyen d'une puissance d'entrée ou la réduction de gain, et non par un atténuateur à la sortie du dispositif.

DDU

Bird's Distributed High power radio head is a high performing wideband radio head equipped with a feed forward multi carrier power amplifier that supports all modulations. The light weight, convection cooled IP65 chassis secures the performance in almost any environment.

FCC standards

Table 38 General Specifications

Noise Figure, Typical	3 dB
Delay excluding optical fiber	< 0.5 µs
Instantaneous Band Width, Max	15 MHz
Power Supply Standard Optional	 85 – 264 VAC -32 to -100 VDC
Operating Temperature	-25 to 55 °C (32 to 113 °F)
Casing	IP65

Table 39 Specifications DDU100 (Single Band)

Power Consumption, max, typical	225 W
Dimensions, W x D x H	11.8 x 5.1 x 27.6 in. 30 x 13 x 70 cm
Weight	31 lbs (14 kg)

Table 40 Specifications DDU200 (Dual Band)

Power Consumption, max, typical	450 W
Dimensions, W x D x H	11.8 x 8.7 x 27.6 in. 30 x 22 x 70 cm
Weight	62 lbs (28 kg)

Cellular Products

Table 41 Available Products, FCC/IC

System	UL Frequency MHz	DL Frequency MHz	Pout, DL, dBm (RMS)	Standard
LTE LB	698 - 716	728 - 746	46	FCC/IC
LTE UB	777 - 787	746 - 756	46	FCC/IC
LTE FB	690 - 716/777 - 787	728 - 756	46	FCC/IC
Cellular	824 - 849	869 - 894	46	FCC/IC
PCS1900	1850 - 1915	1930 - 1995	46	FCC/IC
AWS	1710 - 1780	2110 - 2180	46	FCC/IC

Note: *All specifications subject to change without notice.*

Class B Industrial Booster — This equipment is a Class B Industrial Booster and is restricted to installation as an In-building Distributed Antenna System (DAS).

Remote Unit Frequency Summary

Table 42 ETSI Bands

Band	3GPP Band	UL Frequency	DL Frequency	DDR Max Composite	DDH Max Composite
TETRA, Public Safety		380-385	390-395	26	33
TETRA, Commercial		410-415	420-425	26	33
TETRA, Commercial		415-420	425-430	26	40
CDMA 450	Band 31	452.5-457.5	462.5-467.5	33	40
DD800	Band 20	832-862	791-821	26	40
E-GSM 900	Band 8	880-915	925-960	26	40
GSM 1800	Band 3	1710-1785	1805-1880	28	40
UMTS	Band 1	1920-1980	2110-2170	30	43
LTE 2600	Band 7	2500-2570	2620-2690	30	43

Table 43 FCC/IC Bands

Band	3GPP Band	UL Frequency	DL Frequency	DDR Max Composite	DDS Max Composite (15MHz)	DDH Max Composite	DDU Max Composite
VHF		136-174	136-174	33	N/A	N/A	N/A
UHF		450-470	450-470	33	N/A	N/A	N/A
700 Lower	Band 12	698-716	728-746	33	N/A	43	46
700 Upper	Band 13 & 14	776-806	746-756	33	N/A	43	46
700 Combined	Band 12, 13 & 14	698-716 776-806	728-756	33	41	43	46
700 Public Safety		769-775	799-805	33	-	-	N/A
800 iDEN	Band 27	806-824	851-869	33	41	40	N/A
850 Cellular	Band 5	824-849	869-894	33	41	43	46
1900 PCS	Band 25	1850-1915	1930-1995	33	41	43	46
AWS	Band 4	1710-1755	2110-2155	33	41	43	46
2600 LTE	Band 7	2500-2570	2620-2690	33	N/A	43	N/A

DMU – Remote head end

Bird's DMU100 series is a compact head end that can function as a low power repeater or BTS interface. The unit can directly support up to 4 remotes or can fiber feed a Headend Master Unit. Remote access is provided by either the Bird RGW or via Ethernet connection. The unit is a rugged convection cooled, IP65 chassis designed for outdoor locations.

It is possible to build the DMU to support more than one band, however, the types of bands and the necessary duplexers for a configuration must be verified to ensure compatibility with the RGW.

Figure 20 DMU – Remote Head End

In Figure 21, the DMU is used to pick up the signal at a remote location and then it is transmitted on the fiber to four different locations that need coverage. The RU can be connected to coaxial spreading networks if needed.

Figure 21 DMU Feeding Remote Units

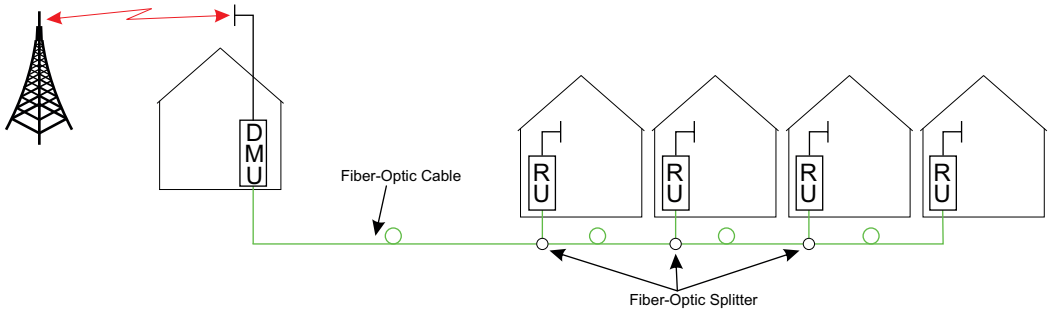

In Figure 22, the DMU is feeding a Headend Master Unit which in turn feeds the Remote Units (RU). This is a far more flexible solution and would be preferred when possible.

Figure 22 DMU Feeding BMU

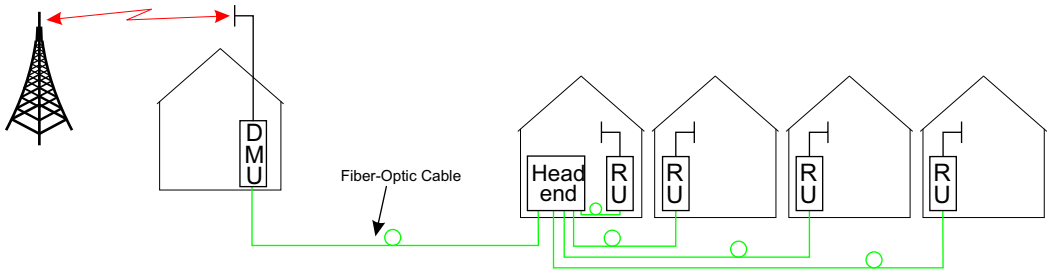

The DMU is equipped with a low power uplink amplifier. The unit should be used in a location that has adequate signal so that power level of a mobile phone will suffice.

Repeaters

Bird Technologies offers a wide variety of repeaters to boost off air signals. The repeated signals can feed passive DAS or can be used as an input into the active DAS.

DMR 400 Series Rack Mount Repeater

The DMR 400 is designed to fit in the Headend Master Frame along with the BIU and FOI cards. The system was originally designed to be used in moving coverage areas such as ships and trains that require active control over the downlink gain (link symmetry) to compensate for wide variations in the off-air signals, but the system can easily be implemented in traditional fixed locations such as offices and hospitals.

Figure 23 DMR 400 Rack Mount Repeater

Although the DMR repeaters are rack mounted with the active DAS components, the DMR repeater can function as a stand alone unit to provide coverage to a passive DAS.

The DMR repeater family offers link symmetry settings. This function is used to automatically adjust the uplink gain based on the downlink signal. When installed in moving coverage areas such as trains, the feature prevents the repeater from desensitizing the donor site by automatically controlling uplink levels.

The DMR repeater also offers self-oscillation protection. This function is used to detect problems with isolation between the donor and service antenna. The repeater will intervene and lower the gain to a level equal to the isolation minus the stability margin. The settings are separate for UL and DL.

- On/Off
- Stability margin: Value setting of how much lower the gain should be than the calculated isolation. Range of 0.0 to 20.0dBm.
- Recovery time: Time that should pass before the repeater reset the gain to the value specified level in “RF Config” (set gain). Range of 30 to 86,400 seconds.
- Recovery margin: Set value of gain level above the gain specified in “RF Config” (set gain) that is used when the repeater recovers after the “Recovery Time”. Range of 0.0 to 20.0dBm.

The DMR400 offers variable bandwidths up to 35Mhz, depending on the configuration.

Remote access can be provided via an Ethernet connection or through the Bird Remote Gateway. SNMP is a standard on the units. No proprietary software is required. Operational parameters are set via a web browser.

Table 44 DMR400 Specifications

Gain	50-80 dBm in 1 dB steps
Noise Figure - Typical	< 5 dB
Delay	<6 s
Dimensions	2 card slots
Weight (module)	0.7 kg (1.5 lbs)
Operating Temperature	-25 to 55 °C (13 to 131 °F)

Table 45 Available Products, Cellular, FCC

	Band	Uplink	Downlink	Pout, DL & UL	Standard
DMR407	iDEN	806-824	851-869	28dBm	FCC
DMR408	Cellular	824-849	869-894	28dBm	FCC
DMR419	PCS1900	1850-1915	1930-1995	28dBm	FCC
DMR420	AWS	1710-1755	2110-2155	28dBm	FCC

Table 46 Available Products, Cellular, ETSI

	Band	Uplink	Downlink	Pout, DL & UL	Standard
DMR401	TETRA, Public Safety	380-385	390-395	20dBm	ETSI
DMR402	TETRA, Commercial	410-415	420-425	20dBm	ETSI
DMR403	TETRA, Commercial	415-420	425-430	20dBm	ETSI
DMR404	CDMA450	453-457.5	463-467.5	25dBm	FCC
DMR406	GSM-R	876-880	921-960	25dBm	ETSI
DMR409	EGSM900	880-915	925-960	19dBm	ETSI
DMR418	GSM1800	1710-1785	1805-1880	21dBm	ETSI
DMR421	UMTS 2100	1920-1980	2110-2170	23(DL)/20(UL)	3GPP

DLR 600 Series Low Power Repeater

The DLR 600 low power repeater is designed for environments where low signal levels are required. Although small, the unit still offers Bird's feature rich functions such as self-oscillation protection, fast AGC, link symmetry functionality, SNMP and remote access via Ethernet or the Bird Remote Gateway.

Figure 24 DLR 600 Low Power Repeater

Table 47 DLR600 Specifications

Gain	40-70 dBm in 1 dB steps
Noise Figure	<5 dB
Delay	<6 s
Power Supply Standard optional	 100 to 240 VAC 12 to 28 VDC
Dimension (W x D x H)	30 x 5 x 21 cm (11.8x2x8.3 inches)
Weight	<1.4 Kg (3.1 lbs)
Operating Temp (DC)	-25 to 55 °C (13 to 131 °F)
Operating Temp (AC)	0 to +40 °C (+32 to +104 °F)
Casing	IP42
Bandwidth	0-15 MHz
Connectors	SMA or N-type

Table 48 Available Products, Cellular, FCC

	Band	Uplink	Downlink	Pout, DL & UL	Standard
DLR607	iDEN	806-824	851-869	16dBm	FCC
DLR608	Cellular	824-849	869-894	16dBm	FCC
DLR619	PCS1900	1850-1915	1930-1995	16dBm	FCC
DLR620	AWS	1710-1755	2110-2155	16dBm	FCC

Table 49 Available Products, Cellular, ETSI

	Band	Uplink	Downlink	Pout, DL & UL	Standard
DLR609	EGSM900	880-915	925-960	13dBm	ETSI
DLR618	GSM1800	1710-1785	1805-1880	23dBm	ETSI
DLR621	UMTS 2100	1920-1980	2110-2170	15dBm	3GPP

DMR600 Series Medium Power Repeater

The DMR 600 is a medium power repeater with band selective capabilities. Although small, the unit still offers Bird's feature rich functions such as self-oscillation protection, fast AGC, link symmetry functionality, SNMP and remote access via Ethernet or the Bird Remote Gateway

Figure 25 DMR 600 Low Power Repeater

Table 50 DMR600 Specifications

Gain	50-80 dBm in 1 dB steps
Noise Figure	<5 dB
Delay	<6 s
Power Supply Standard optional	 100 to 240 VAC 12 to 30 VDC
Dimension (W x D x H)	30 x 5 x 21 cm (11.8x2x8.3 inches)
Weight	<1.4 Kg (3.1 lbs)
Operating Temp (DC)	-25 to 55 °C (13 to 131 °F)
Operating Temp (AC)	0 to +40 °C (+32 to +104 °F)
Casing	IP42
Bandwidth	35 MHz
Connectors	SMA or N-type

Table 51 Available Products, Cellular, FCC

	Band	Uplink	Downlink	Pout, DL & UL	Standard
DMR607	iDEN	806-824	851-869	16dBm	FCC
DMR608	Cellular	824-849	869-894	16dBm	FCC
DMR619	PCS1900	1850-1915	1930-1995	16dBm	FCC
DMR620	AWS	1710-1755	2110-2155	16dBm	FCC

Table 52 Available Products, Cellular, ETSI

	Band	Uplink	Downlink	Pout, DL & UL	Standard
DMR604	CDM450	453-457.5	463-467.5	25dBm	FCC
DMR606	GSM-R	876-880	921-925	19dBm	ETSI
DMR609	EGSM900	880-915	925-960	19dBm	ETSI
DMR618	GSM1800	1710-1785	1805-1880	29dBm	ETSI
DMR621	UMTS 2100	1920-1980	2110-2170	23 (DL)/20(UL)	3GPP

DHR 800 Series High Power Repeater

The DHR 800 offers a high power solution in a light weight, convection cooled IP65 chassis. The unit offers Bird's feature rich functions such as self-oscillation protection, fast AGC, link symmetry functionality, SNMP and remote access via Ethernet or the Bird Remote Gateway all in a rugged IP65 chassis.

Figure 26 DHR 800 Series High Power Repeater

The DHR repeater family offers link symmetry settings. This function is used to automatically adjust the uplink gain based on the downlink signal. When installed in moving coverage areas such as trains, the feature prevents the repeater from desensitizing the donor site by automatically controlling uplink levels.

The DHR repeater also offers self-oscillation protection. This function is used to detect problems with isolation between the donor and service antenna. The repeater will intervene and lower the gain to a level equal to the isolation minus the stability margin. The settings are separate for UL and DL.

- On/Off
- Stability margin: Value setting of how much lower the gain should be than the calculated isolation. Range of 0.0 to 20.0dBm.
- Recovery time: Time that should pass before the repeater reset the gain to the value specified level in “RF Config” (set gain). Range of 30 to 86,400 seconds.
- Recovery margin: Set value of gain level above the gain specified in “RF Config” (set gain) that is used when the repeater recovers after the “Recovery Time”. Range of 0.0 to 20.0dBm.

Table 53 DHR800 Specifications

Gain	50-88 dBm in 1 dB steps
Noise Figure	<5 dB
Delay	<6 s
Power Supply	85 to 264 VAC
Power Consumption	<130 W
Dimension (WxDxH)	30 x 13 x 70 cm (11.8 x 5.1 x 27.6 inches)
Weight	<12 kg (26.4 lbs)
Operating Temp	-25 to 55 °C (13 to 131 °F)
Casing	IP65
Bandwidth	35 MHz
Connectors	N-type or DIN 7/16

Table 54 Available Products, Cellular, FCC

	Band	Uplink	Downlink	Pout, DL & UL	Standard
DHR807	iDEN	806-824	851-869	33(DL)/25(UL)	FCC
DHR808	Cellular	824-849	869-894	33(DL)/25(UL)	FCC
DHR819	PCS1900	1850-1915	1930-1995	33(DL)/25(UL)	FCC
DHR820	AWS	1710-1755	2110-2155	33(DL)/25(UL)	FCC

Table 55 Available Products, Cellular, ETSI

	Band	Uplink	Downlink	Pout, DL & UL	Standard
DHR801	TETRA, Public Safety	380-385	390-395	26(DL)/20(UL)	ETSI
DHR802	TETRA, Commercial	410-415	420-425	26(DL)/20(UL)	ETSI
DHR803	TETRA, Commercial	415-420	425-430	26(DL)/20(UL)	ETSI
DHR804	CDMA450	453-457.5	463-467.5	33(DL)/25(UL)	FCC
DHR806	GSM-R	876-880	921-960	26(DL)/19(UL)	ETSI
DHR809	EGSM900	880-915	925-960	26(DL)/19(UL)	ETSI
DHR818	GSM1800	1710-1785	1805-1880	28(DL)/21(UL)	ETSI
DHR821	UMTS 2100	1920-1980	2110-2170	30(DL)/21(UL)	3GPP

Bird Repeater Frequency Summary

Table 56 ETSI Bands

	DL Frequency	UL Frequency	DMR 400	DLR 600	DMR 600	DHR 800
TETRA Public Safety	390-395	380-385	✓			✓
TETRA, Commercial	420-425	410-415	✓			✓
TETRA, Commercial	425-430	415-420	✓			✓
CDMA 450	463-467.5	453-457.5	✓		✓	✓
GSM-R	921-925	876-880	✓		✓	✓
EGSM900	925-960	880-915	✓	✓	✓	✓
GSM 1800	1805-1880	1710-1785	✓	✓	✓	✓
UMTS	2110-2170	1920-1980	✓	✓	✓	✓

Table 57 FCC Bands

	DL Frequency	UL Frequency	DMR 400	DLR 600	DMR 600	DHR 800
Public Safety 800	851-869	806-824	✓	✓	✓	✓
Cellular 850	869-894	824-849	✓	✓	✓	✓
PCS 1900	1930-1995	1850-1915	✓	✓	✓	✓
AWS	2110-2155	1710-1755	✓	✓	✓	✓

WARNING
This is NOT a consumer device.
It is designed for installation by **FCC LICENSEES** and **QUALIFIED INSTALLERS.** You **MUST** have an **FCC LICENSE** or express consent of an FCC licensee to operate this device. You MUST register Class B signal boosters (as defined in 47 CFR 90.219) online at www.fcc.gov/signal-boosters/registration. Unauthorized use may result in significant forfeiture penalties, including penalties in excess of $100,000 for each continuing violation.

For CMRS 817-824MHz Applications and American Cellular Applications:

WARNING
This is NOT a consumer device.
It is designed for installation by **FCC LICENSEES** and **QUALIFIED INSTALLERS.** You **MUST** have an **FCC LICENSE** or express consent of an FCC licensee to operate this device. Unauthorized use may result in significant forfeiture penalties, including penalties in excess of $100,000 for each continuing violation.

This device complies with part 15 of the FCC rules. Operation is subject to the following two conditions: (1) This device may not cause harmful interference and (2) this device must accept any interference received, including interference that may cause undesired operation.

For installations subject to Industry Canada certification:

WARNING
This is NOT a consumer device.
It is designed for installation by an installer approved by an ISED licensee.
You MUST have an ISED LICENCE or the express consent of an ISED licensee to operate this device.

Health and Safety

Bird DAS system is an advanced system and should be handled by skilled staff. Bird is happy to offer training of installation service providers in the case this is necessary.

Read all available documentation and warnings before handling the equipment. Equipment failures due to improper handling are normally not covered by the product warranty.

Respect all warning signs on the equipment and in the documentation. Make sure to only operate the equipment on frequencies allowed to use. Do not modify the equipment.

WARNING
Avoid looking into connected fibers and receptacles.
The laser used in this system is a Class 3b laser that produces invisible infra-red coherent light. Not safe to view with optical instruments. Always put the protection caps on unused fibers and receptacles.

The equipment contains a Class 3B laser and the equipment is Class 1. Do never look into the Laser beam directly or indirectly, it is strong invisible light and may cause serious damage to human eyes.

Always use protective caps on fiber and connector ends when fiber is removed from socket. Always clean socket and connector after a fiber has been removed before it is reconnected.

Make sure to keep passwords and other operational information away from unauthorized personnel.

Cable Routing/Antenna Selection

Ensure all cables, e.g. power cable, fiber-optic cable, Antenna cables are routed and secured in accordance with local/national requirements while avoiding damage to the cables.

Antennas and coax cables are selected as part of the DAS system design and may vary with location, frequency, and power level requirements.

Use only authorized and approved antennas, cables and/or coupling devices. The use of unapproved antennas, cables or coupling devices could cause damage and may be of violation of FCC regulations.

Each individual antenna used with the DAS must be installed to provide the separation distance as specified in the RF exposure requirements (refer to specific Remote Unit RF Exposure limits in the system description section).

CAUTION

Unauthorized antennas, cables, and/or coupling devices may cause non-conformity with national or international regulations, could cause damage, or non-conforming ERP/EIRP.

Antenna Installation

The Bird Fiber DAS systems do not include remote or head end antenna. The remote end antenna must be selected during system design, the antenna manufacturer's data will be required when calculating link budgets.

Antenna installation instructions are provided by the antenna manufacturer.

External donor antennas that are most commonly used in combination with DDR or DDH Remote Unit family for outdoor environment are 17 dBi gain antennas.

Safety and Care for Fibers

WARNING

Avoid looking into connected fibers and receptacles.

The laser used in this system is a Class 3b laser that produces invisible infra-red coherent light. Not safe to view with optical instruments. Always put the protection caps on unused fibers and receptacles.

Every time a fiber is disconnected and re-connected care should be taken to avoid getting dust on the connector or in the receptacle. Clean with a dry fiber cleaning tool before reconnecting the fiber at all times. A single speck of dust can severely impact the transmission. Do not touch the fiber ends with your fingers. That will leave grease on the connectors and may cause severe problems.

Tools and Material Requirements

Fiber Optics

All fiber optic cables, including patch cords, must be SINGLE MODE. Multi-mode fiber is not supported.

Bird equipment is designed to be used with only SC/APC fiber connectors. All connection points in the fiber must either be fusion spliced or equipped with APC connectors. UPC connectors anywhere in the fiber path will cause degradation in the performance of the equipment. APC connectors can be identified by their green jacket.

- Total optical loss must be < 15dBo.
- Optical return loss -60 dB or greater.

Fiber panel inserts/couplings must be APC.

Tools

- Fiber Optic cleaner for SC/APC connectors
- T8 Torx bit for card cage modules
- Appropriate bit for rack screws
- Spectrum analyzer with RF power meter
- Appropriate jumper cables to connect spectrum analyzer to Bird equipment
- OTDR
- Optical power meter
- Optical visual fault finder
- Fiber splicer
- SMA torque wrench calibrate to 0.9 N-m
- ESD Strap - (Electrostatic Discharge): The BIU, FOI and Power Supplies contain highly sensitive components that can be destroyed by static.

NEVER open cards, BGW, CGW, repeaters or remotes!

Miscellaneous Material

- AC power cord(s) if using the DPU-301 power supply [AC to DC power supply]
- 18 AWG power wire if using the DPU-302 power supply [DC to DC power supply]
- Ferrite bead filter for the DC supply cable to the DPU-302. The ferrite bead filter must be installed close to the DPU-302. Follow manufacturer recommendations for proper installation of the ferrite bead filter.

Installing Headend Equipment

All equipment must be properly grounded. Ground peg in the main connector for both head-end gear (Master Unit) and remote gear (Remote Units) must be connected to Phase, Neutral and Ground in a proper way before power is connected.

The chassis of the remote and the rack of the master unit should be grounded to a potential bar or safety grounding bar when operated. All electrical installations should be done by a certified electrician only.

BGW

The BGW is designed to be installed in a 19" rack.

- The BGW is typically mounted near the top of the rack.
- Connect power to an available NEMA5-15R receptacle.
- Using installer provided Ethernet cable, connect the “Ext” port to the appropriate back-haul connection. The back-haul connection can be DSL, off air modem, LAN, WAN. See BGW set up instructions.

Figure 27 BGW Installation, Ethernet Connections

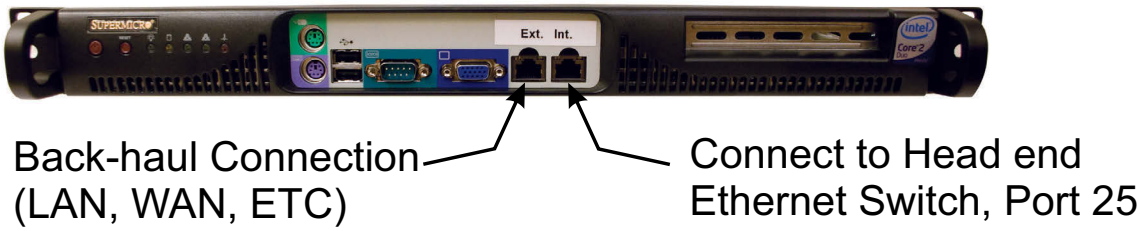

Ethernet Switch

The Ethernet switch, ETH, is designed to be installed in a 19" rack.

- Placement is typically between the BGW and the Master Frame Unit. Placement consideration should include proper routing of Ethernet cables and the installation of additional cables after the initial installation is complete. Mounting may with Ethernet ports to the front or rear of the rack.
- Connect power to an available NEMA5-15R receptacle.
- Using installer provided Ethernet cable, connect port 25 of the Ethernet switch to the “INT” port on the BGW.

Figure 28 Ethernet Switch

Master Unit

The Master Unit is designed to be installed in a 19" rack.

- Before installing, consider cable routing for all cards to be installed in the Master Unit. The installer may want to consider horizontal cable managers to be mounted above and below the Master Unit to aid in the installation and ongoing maintenance of the system.
- Each card in the Master Unit will require an Ethernet connection to the BGW in order to be programmed and monitored. Install contractor provided Ethernet cable between the appropriate Ethernet port and the Ethernet switch.

Note: *The port number on the Master Unit is in reverse order on the back of the Master Unit.*

Figure 29 Ethernet Port Numbering, Front and Rear Views

- Only the active port on the Master Unit requires an Ethernet connection.

  Example: The BIU will consume two slots in the Master Unit. If installed in slots #1 and #2, only slot #1 will make physical connection to the backplane. Install an Ethernet cable on the back of the Master Unit in port #1 to provide the BIU with BGW connectivity.
- All open slots on the Master Unit require a blank cover plate to allow for proper air circulation. Blank plates must be ordered separately.

Table 58 Available Blank Cover Plates

Part Number	Slots Covered
DB101	1 Slot
DB102	2 Slots
DB103	3 Slots
DB104	4 Slots

Power Supply Unit

Bird Technologies offers two different power supplies for the Master Unit: AC (DPU-301) and DC (DPU-302). The power supply can be located in a Master Unit other than the one it is powering. Each power supply is shipped with one Molex power supply jumper. If redundant power supplies are required additional power supply jumper(s) will need to be ordered.

The power supply uses four slots on the Master Unit.

- Prior to installing the PSU in the Master Unit chassis the red slide rails must be carefully removed from the slots that the PSU will occupy.

Figure 30 Slide Rail Removal

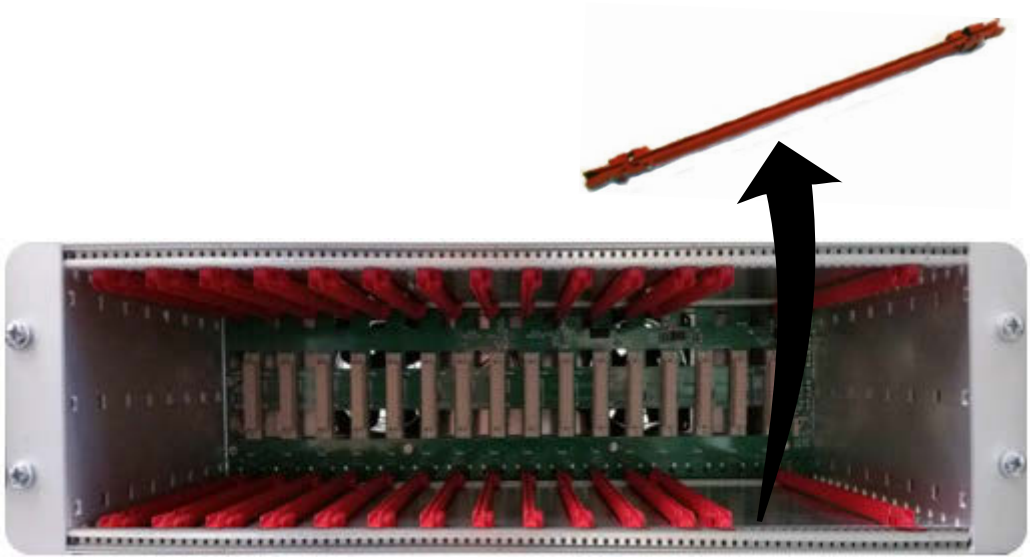

PSU DPU-301

The AC DPU-301 power supply has a standard C13 receptacle.

- The AC DPU-301 has an input range from 86-264 VAC with 50 or 60 Hz.
- Due to site-specific needs on length and varying standards of AC plug types, the AC power cord does not ship with the equipment. The installation contractor must provide the AC power cord.

The DPU-301 can support a single, fully loaded Master Frame Unit with up to 16 cards (BIU, FOI, ICU). The cards may be all of one type or a mixture of types.

Figure 31 Power Supply Units

DPU-301 DPU-302

PSU DPU-302

The DPU-302 uses a HAN four prong Heavy Duty Power Connector.

- The DC to DC DPU-302 power supply has in input rating of -36 VDC to -72 VDC.
- The DPU-302 requires the installer to provide 18 AWG wire for the HAN 3 A plug kit (Harting P/N 10 20 003 0002) that is provided with the power supply. See Table 59 for connector pinout.

The DC power supply can support a single Master Frame Unit with up to 12 cards (BIU, FOI, ICU). The cards may be all of one type or a mixture of cards.

Table 59 DPU-302 Connector Pinout

Han 3A Pinout	
Pin #1	(+) Positive
Pin #2	Not connected
Pin #3	(-) Negative
Pin #4	Earth/Ground

Primary Power Configuration

Connect the output of the power supply to the input of the Master Unit.

- Use P101 on the Master Unit as the main power supply feed. See Figure 32.

Note: *Note that although there are two output connections on the front of the PSU, the PSU can only power one Master Frame at a time.*

Figure 32 Primary Power Configuration

Primary Power for One Master Unit

Backup Power Configuration

It is not required to use a backup/redundant power supply, but if the primary PSU fails a backup PSU will allow the unit to continue operating without causing an outage.

The system designer may elect to have a single, redundant PSU act as a backup to two different Master Units simultaneously with the understanding that if the main PSU for each Master Unit fails during the same time period that the backup/redundant PSU can't support both Master Units.

- Use P102 on the Master Unit for a backup/redundant power supply. See Figure 33 on page 46.

Figure 33 Backup Power Configuration

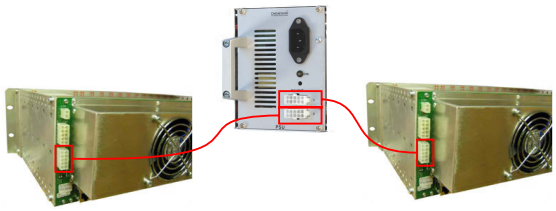

Backup Power for Two Master Units

BIU

CAUTION
Overdriving the RF source input into the BIU will cause permanent equipment failure and will void the warranty. The installer must ensure that input levels are not exceeded. Plan for maximum power out of the RF source and attenuate accordingly with external attenuators if needed.

The BIU serves as the RF interface between the RF source and the ICU/FOI. Each BIU is pre-set to a frequency band and is not field tunable.

The BIU has two sets of RF source connections. The units can accept two independent feeds (within the same band). The feeds can be from separate sources or A and B paths in a MIMO configuration.

Due to the high level of RF coming into BIU, use only quality RF cables.

BIU Type	Minimum DL Input	Maximum DL Input
Low Level	-7dBm	+7dBm
High Level	+20dBm	+33dBm

Figure 34 BIU Connections

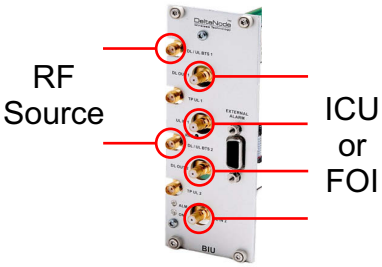

- Install the BIU in the Master Unit. The BIU uses two slots in the Master Unit.

CAUTION
When mating RF connectors, ensure that they are properly aligned and not cross threaded.
Tighten SMA connectors to 8 in.-lbs (0.9 N-m).
Do over torque RF connectors, this could result in damage to the Unit.
Do not under torque RF connectors, this could result in poor signal transmission.

Note: *The UL1 and UL2 uplink test ports are 3dB lower than the signal on the corresponding DL/UL BTS port.*

- Connect SMA to the RF source. Tighten to 8 in-pounds (0.9 N-m) with a calibrated torque wrench.
- Connect QMA to the ICU/FOI.

CAUTION
Excess tension on the cable or connectors may cause PIM issues.
Cables must be secured in the rack without applying tension to the connectors.

ICU

The ICU is designed to be installed in a 19" rack.

- The ICU is typically installed directly above or below the Master Unit chassis. Consider post installation changes and testing when selecting a slot to install the ICU.

Figure 35 ICU

The ICU has QMA connectors. QMA cable kit - Bird part number DCC320 is available for use with the ICU. The kit contains 32 QMA to QMA cables (see Table 60) that can be used to patch between the BIU to the ICU, BIU to the FOI or ICU to FOI.

Table 60 QMA Cable Kit

Length	Quantity
250 mm (9.8”)	13
350 mm (13.8”)	13
500 mm (19.7”)	6

The ICU is configured with two identical paths - uplink and downlink. The typical configuration [DIU301 (88MHz to 2700MHz)] is four 1:8 splitters/combiners (two for UL and two for DL). Note that the theoretical loss for each DIU301 is 35dBm.

FOI

The FOI is mounted in the Master Unit chassis. The FOI uses one slot in the Master Unit.

- The RF connections are QMA.
- The fiber connections are SC/APC.

The FOI can be ordered with an optional DCC330 jumper kit. The kit contains two SC/APC jumpers that are 5 meters (16.4 feet) in length.

Figure 36 FOI Connections

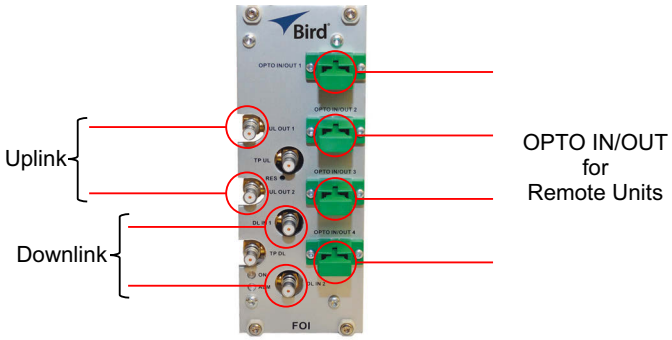

RFU

The integrated repeater unit, RFU, DMR400 is mounted in the Master Unit chassis. The DMR400 uses two slots in the Master Unit.

Figure 37 RFU Connections

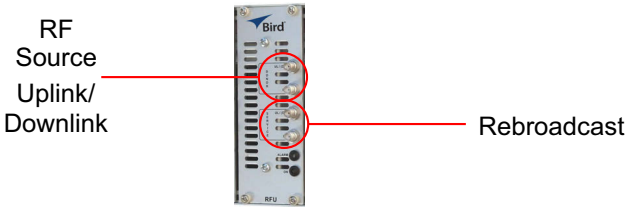

Powering Up the Head End

1. Apply power to the BGW by pressing the power button on the left side of the unit.
   The BGW requires approximately 5 minutes to completely boot up. During the BGW boot process, the modules in the Master Unit will flash Red and Green.
2. Apply power to the Ethernet Switch and the Master Unit.
3. Verify BGW boot cycle is complete,

   Note: *The BGW will have green LED's lit even when powered off. This is part of the LAN wake up feature. When the BGW is running there will be three LED's lit and the hard drive icon showing activity.*
4. See Table 61 for the LED alarm codes for the modules in the Master Unit.
   After the BGW boot process is complete, all modules in the Master Unit should have some LED indication. If not, see Table 62.

Table 61 Master Unit Module LED Indicators

Status	LED Indication
Normal	Green - slow flash
Incoming Alarm	Solid Red - Limited to 5 seconds
Warning	Red LED flashes 1 Hz 1/8 duty cycle
Error	Red LED flashes 2Hz ¼ duty cycle
Critical	Red LED remains solid

Table 62 Master Unit Troubleshooting

Malfunction	Corrective Action
If no modules have LED indications	Check Power cable to PSU.
	Check power source for Master Unit.
	Check connection from PSU to Chassis.
If a module does not have LED ON Indicator	Verify the module is properly seated into the chassis.
	Move a module to another slot on the Master Unit chassis.
	Replace module.

Installing Remote Units

The remote units are factory configured and should not be opened in the field.

WARNING
The Remote Units are heavy , use care and always properly support units during installation. If allowed to fall Remote Units can cause injury or death.

CAUTION
Ensure the surfaces being used to mount Remote Units can safely support the full weight of the remote.

The remotes must be mounted in a vertical position. There are two recommended methods for Remote Unit installation, wall mounting or pole mounting. Regardless of the mounting style selected, the remotes must be mounted so that airflow over the external heat sink is not obstructed.

Single Remote Unit Wall Mounting

The remotes are shipped with standard wall mounting brackets. These brackets can be used indoors and outdoors.

- Mount the bracket (p/n DMB301) without the remote attached.

  Note: Always check local building codes for proper mounting techniques!

- Once the bracket is properly mounted, the remote easily slides into the mount. See Figure 38.

  Note: ***Figure 38 Remote Wall Mount***

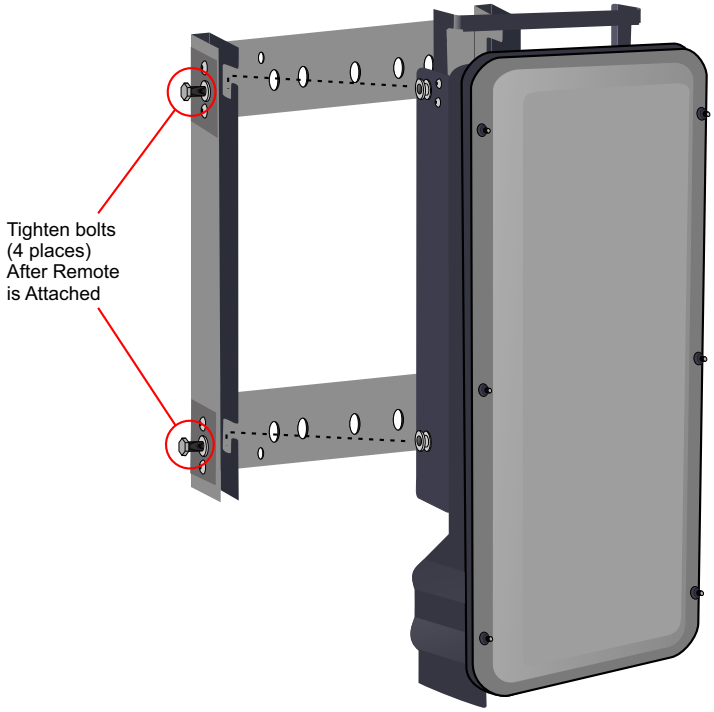

- Once the remote is attached to the wall mount, the remote must be properly secured to the mount by tightening bolts at each mounting point.

Double Remote Unit Wall Mounting

Bird Technologies offers a bracket that allows two wall mount racks to be mounted back to back. This reduces the amount of wall space required when two remotes are located together. The bracket is stainless steel and can be used indoors or outdoors.

Figure 39 Double Wall Mounting Bracket

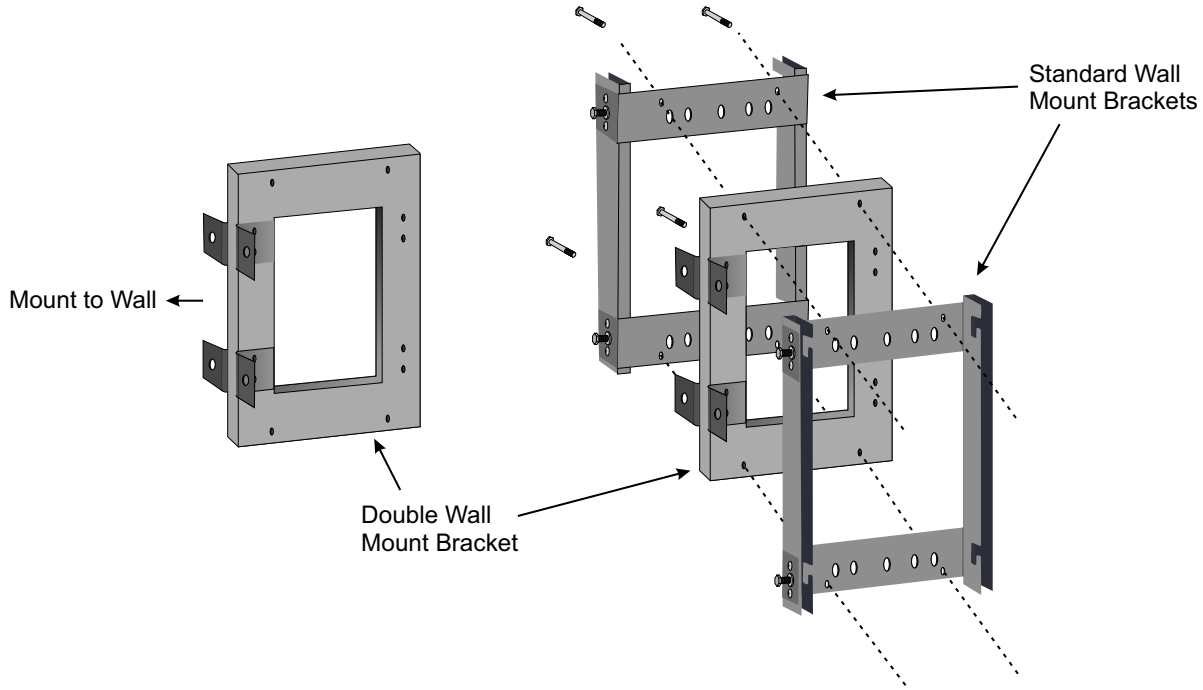

Remote Unit Pole Mounting

Bird Technologies also offers a pole mounting option. The pole mount brackets are designed to be used with the Double Remote Wall Mount bracket.

Figure 40 Remote Unit Pole Mounting Option

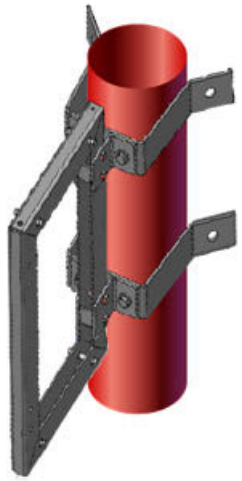

Solar Shield

Direct exposure to sun light can cause temperatures of the remote to exceed the 55 °C (131°F) rating. A simple solution offered by Bird is to attach an optional solar shield to the affected remotes. The solar shields (p/n DMA301) are sold separately.

Figure 41 Remote Unit Solar Shield

Cabling

There are many options for the Bird remotes which can affect the number of connections on the bottom of each remote. The standard connections are:

- Ethernet port
- RF Port (N, mini DIN or 7/16 DIN, Simplex or Duplex) - Number of ports varies
- Power (AC)
- External alarm port
- Grounding
- Fiber Optic

Figure 42 Remote Unit Cabling Connectors

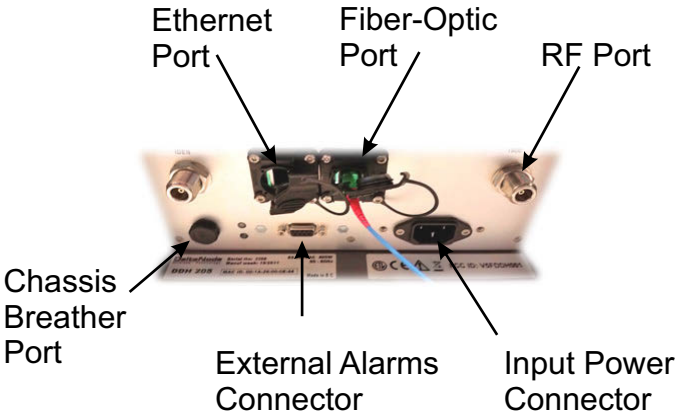

Ethernet Port

The RJ45 Ethernet port is located on the bottom panel of the remote unit. Connection of the Ethernet port is not required for normal operation of the DAS. The port offers convenient access to the system GUI during installation, commissioning and troubleshooting of the DAS. Ensure the provided IP67 rated protective cap is replaced when the Ethernet port is not in use.

If the Ethernet connection is to be long term or permanent, ensure that the appropriate Ethernet patch cable is utilized to prevent the ingress of moister into the port.

The Ethernet port will allows for two types of connections.

1. Remote unit is not connected to the FOI in the Master Unit
   - Access will be limited to the Remote Unit. User may change setting on the Remote Unit.
   - Static IP address for local access is https://169.254.48.1
     - ✓ Username: "extended"
     - ✓ Password: "admin"
2. Remote Unit is actively connected to the FOI in the Master Unit
   - Full access to all GUI features will be allowed
   - Access will require the Master Unit IP address: https://172.22.0.1
     - ✓ Username: "extended"
     - ✓ Password: "admin"

Fiber Optic Connection

The fiber connection on the bottom of the remote has an IP67 rated protective cap. The protective cap must remain in place until the fiber is to be inserted. This will help prevent foreign particles from degrading performance of the fiber.

The fiber connection has a keyed slot SC/APC connection. Care must be taken to ensure the fiber is installed correctly. It is possible to force the connection so that the fiber is installed at a 180 degree rotation causing performance issues.

Note: *The SC/APC key is at the top and bottom on the connection on the remote.*

Figure 43 Remote Fiber-Optic Connector

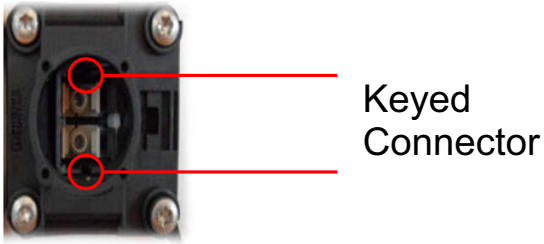

It is **highly recommended** that only the SCRJ fiber cables be used with the remotes. Not only does the SCRJ cable prevent the ingress of moisture and dust into to the fiber port but the cable also insures the fibers are correctly aligned in the connector. SCRJ fiber cables are ordered separately from Bird Technologies.

Figure 44 SCRJ Connector

AC Power Input

The Bird remote only comes with an AC input option. The voltage range will support 120VAC or 240VAC, 50 or 60 Hz. The remote ships with a weather proof C13 connector and weather proof strain relief housing. The unit does not ship with a power cord - only the power connector. The installation contractor will need to provide a power cable of at least 14AWG, 3 conductor cable.

Figure 45 Weatherproof AC Input Connector

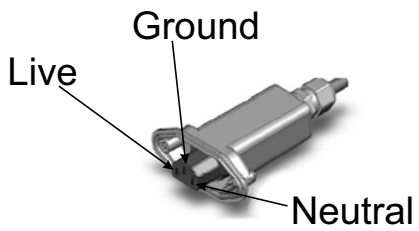

WARNING
Electrical installation should only be performed by a licensed electrician.

External Alarm Connection

The external alarm port on the Bird remote requires an IP 67 D-sub connector (not supplied by Bird).

Table 63 Alarm Definitions

Alarm Input	Level	Alarm Text
1 (Pin 9)	Error	Battery voltage low
2 (Pin 4)	Critical	Loss of main AC power
3 (Pin 8)	Warning	External alarm 3
4 (Pin 3)	Error	External alarm 4

Figure 46 External Alarm Connector

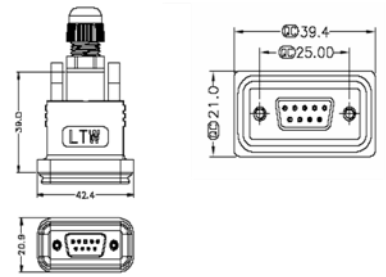

Use an IP 67 D-Sub connector for External connections

Table 64 External Alarm Connector Pinout

Pin	Function
1	Alarm relay output NC
2	Alarm relay output NO
3	Alarm input 4
4	Alarm input 2
5	Alarm input ground
6	Alarm relay output NC
7	Alarm relay output NO
8	Alarm input 3
9	Alarm input 1

Grounding

The remotes are furnished with a ground lug to be used if chassis grounding is required to meet local code or installation requirements. The external grounding lug must be used when the remote is installed in applications where it is susceptible to lightening strikes.

If the remote is mounted in areas with high EMF such as near high amperage transformers, turbines or broadcast antennas, properly grounding the chassis will provide reduce the likelihood interference.

Figure 47 Remote Ground Connection

Remote Unit Verification

Once the remote has been properly installed and all connections made the unit may be powered up. The unit is automatically powered up once power is applied to the AC plug on the bottom of the unit.

The typical power cycle of the remote is approximately 90 seconds. The red and green LED on the bottom of the remote will flash during the boot cycle.

- Once the boot cycle is complete, a solid red LED indicates there is no fiber connection or communication to the DAS head end.

Installing the DHR Repeater

The repeaters units are factory configured and should not be opened in the field.

WARNING
The Repeaters are heavy , use care and always properly support units during installation. If allowed to fall a Repeater can cause injury or death.

CAUTION
Ensure the surfaces being used to mount the Repeater can safely support the full weight of the Repeater.

The remotes must be mounted in a vertical position. There are two recommended methods for Remote Unit installation, wall mounting or pole mounting. Regardless of the mounting style selected, the remotes must be mounted so that airflow over the external heat sink is not obstructed.

Single Repeater Wall Mounting

The repeaters are shipped with standard wall mounting brackets. These brackets can be used indoors and outdoors.

- Mount the bracket without the repeater attached.

  Note: Always check local building codes for proper mounting techniques.

- Once the bracket is properly mounted, the repeater easily slides into the mount. See Figure 48.

Figure 48 Repeater Wall Mount

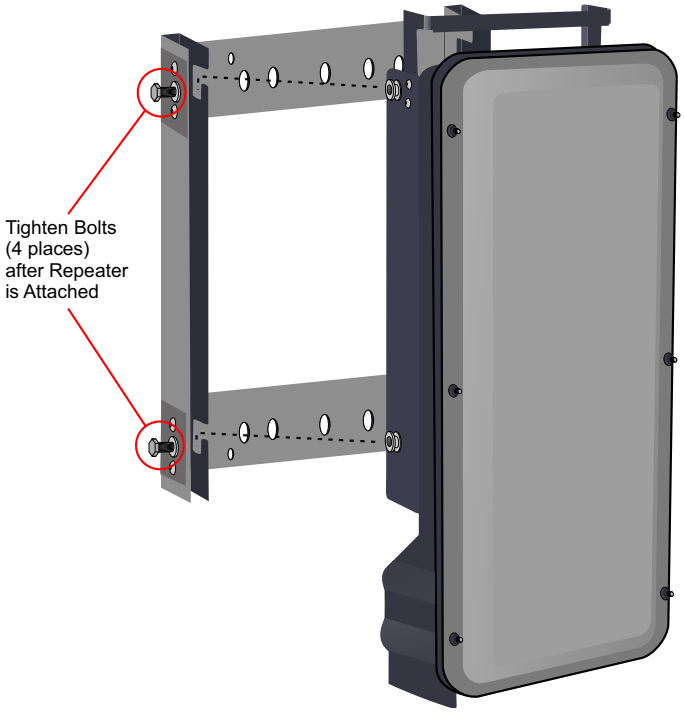

- Once the repeater is attached to the wall mount, the repeater must be properly secured to the mount by tightening bolts at each mounting point.

Double Repeater Wall Mounting

Bird Technologies offers a bracket that allows two wall mount racks to be mounted back to back. This reduces the amount of wall space required when two repeaters are located together. The bracket is stainless steel and can be used indoors or outdoors.

Figure 49 Double Wall Mounting Bracket

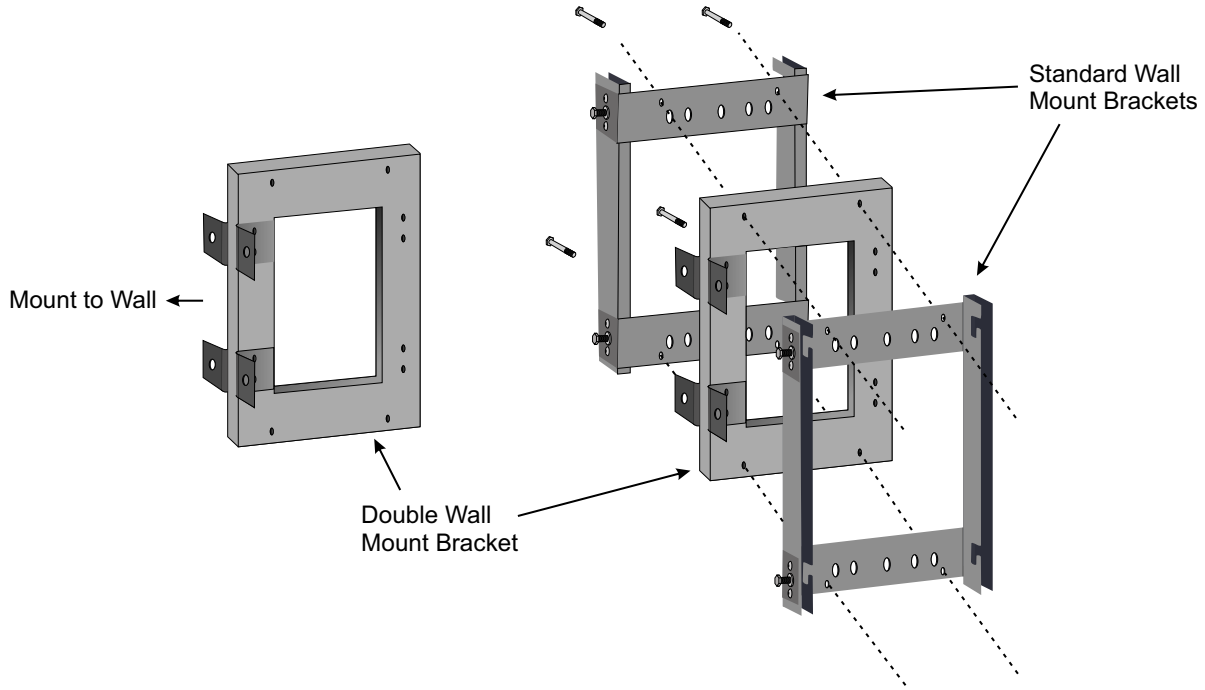

Repeater Pole Mounting

Bird Technologies also offers a pole mounting option. The pole mount brackets are designed to be used with the Double Wall Mount bracket.

Figure 50 Repeater Pole Mounting Option

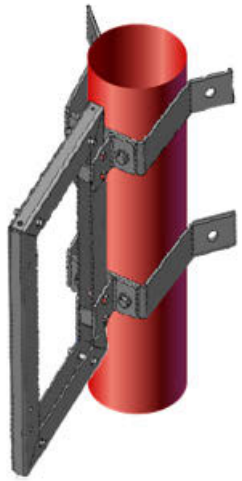

Solar Shield

Direct exposure to sun light can cause temperatures of the repeater to exceed the 55 °C (131°F) rating. A simple solution offered by Bird is to attach an optional solar shield to the affected repeaters. The solar shields are sold separately.

Figure 51 Remote Unit Solar Shield

Cabling

There are many options for the Bird repeaters which can affect the number of connections on the bottom of each repeater. The standard connections are:

- Ethernet port
- RF Ports (N-Type standard)
- Input Power
- External alarm port
- Grounding
- Fiber Optic (optional)

Figure 52 Repeater Cabling Connectors

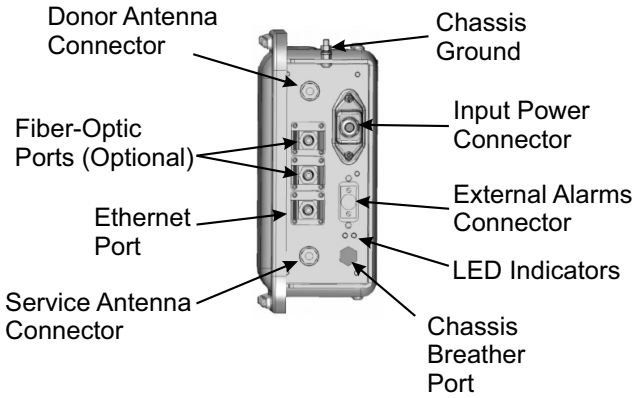

Ethernet Port

The RJ45 Ethernet port is located on the bottom panel of the repeater unit. Connection of the Ethernet port is not required for normal operation of the repeater. The port offers convenient access to the system GUI during installation, commissioning and troubleshooting. Ensure the provided IP67 rated protective cap is replaced when the Ethernet port is not in use.

If the Ethernet connection is to be long term or permanent, ensure that the appropriate Ethernet patch cable is utilized to prevent the ingress of moister into the port.

Fiber Optic Connection

If the fiber optic option is ordered, the fiber connection on the bottom of the repeater has an IP67 rated protective cap. The protective cap must remain in place until the fiber is to be inserted. This will help prevent foreign particles from degrading performance of the fiber.

The fiber connection has a keyed slot SC/APC connection. Care must be taken to ensure the fiber is installed correctly. It is possible to force the connection so that the fiber is installed at a 180 degree rotation causing performance issues.

Note: *The SC/APC key is at the top and bottom on the connection on the* repeater.

Figure 53 Remote Fiber-Optic Connector

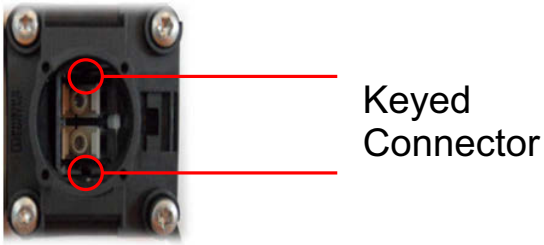

It is **highly recommended** that only the SCRJ fiber cables be used with the repeaters. Not only does the SCRJ cable prevent the ingress of moisture and dust into to the fiber port but the cable also insures the fibers are correctly aligned in the connector. SCRJ fiber cables are ordered separately from Bird Technologies.

Figure 54 SCRJ Connector

AC Power Input

The Bird repeater only comes with an AC input option. The voltage range will support 120VAC or 240VAC, 50 or 60 Hz. The remote ships with a weather proof C13 connector and weather proof strain relief housing. The unit **does not ship with a power cord** - only the power connector. The installation contractor will need to provide a power cable of at least 14AWG, 3 conductor cable.

Figure 55 Weatherproof AC Input Connector

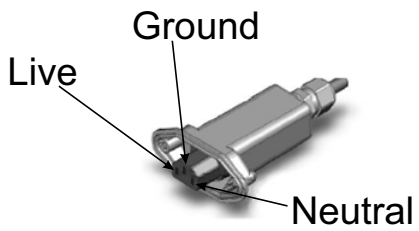

WARNING
Electrical installation should only be performed by a licensed electrician.

External Alarm Connection

The external alarm port on the repeater requires an IP 67 D-sub connector (not supplied by Bird).

Table 65 Alarm Definitions

Alarm Input	Level	Alarm Text
1 (Pin 9)	Error	Battery voltage low
2 (Pin 4)	Critical	Loss of main AC power
3 (Pin 8)	Warning	External alarm 3
4 (Pin 3)	Error	External alarm 4

Figure 56 External Alarm Connector

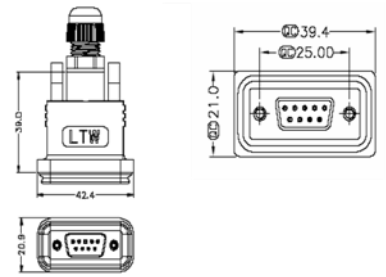

Use an IP 67 D-Sub connector for External connections

Table 66 External Alarm Connector Pinout

Pin	Function
1	Alarm relay output NC
2	Alarm relay output NO
3	Alarm input 4
4	Alarm input 2
5	Alarm input ground
6	Alarm relay output NC
7	Alarm relay output NO
8	Alarm input 3
9	Alarm input 1

Grounding

The repeaters are furnished with a ground lug to be used if chassis grounding is required to meet local code or installation requirements.

Figure 57 Remote Ground Connection

This section is focused on the GUI interface and initial software setting of the DAS. No special software is require to access the Bird DAS. Access is provided via most web browsers such as Mozilla Firefox or Google Chrome.

The BGW should be powered up and allowed about 5 minutes to fully boot prior to applying power to the Master Unit. The BGW will assign IP addresses to the Master Unit components. If the Master Unit is powered up prior to the BGW then it could take up to 30 minutes for the Master Unit components to get assigned an IP address. Master Unit cards will show a quick flash of the green LED when an IP address has been assigned.

Special Note: The following is based on version 3.5 software.

Ethernet Connection

1. Connect a laptop to any open port on the Headend Ethernet switch.
2. Ensure the laptop network settings have DHCP enabled and the “Obtain an IP address automatically” radio button checked.

Figure 58 Windows TCP/IP Settings

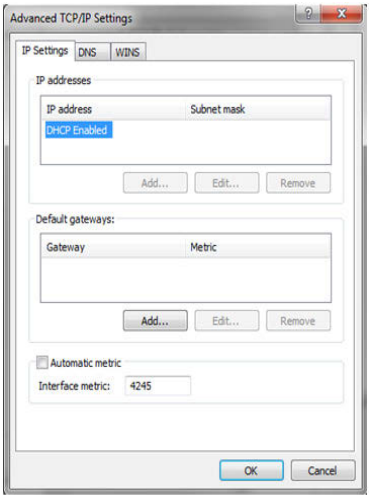

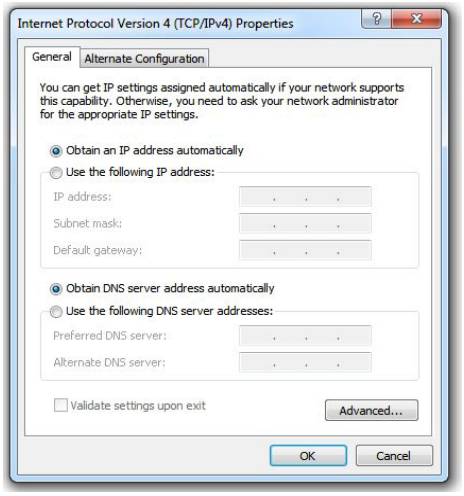

3. Using an Internet browser go to https://172.22.0.1 to access the BGW. A successful entry will show access to the login page.
4. Login to the BGW.
   - Username: "extended"
   - Password: "admin"

Figure 59 BGW Login page

BGW Configuration

BGW Naming

1. Select **Configuration** in top right corner. See Figure 60.
2. Select **External Comm** in left menu.
3. Select **BGW Name** tab in top menu.
4. Enter site name:
   a. You may use any combination of alphanumeric characters and the special character of dash "-". Do not use any other special characters or space.
      - ✓ 0 through 9
      - ✓ a through z
      - ✓ A through Z
      - ✓ -
      - ✓ Limit of 56 characters
   b. Use a site name that is descriptive enough to distinguish the BGW from other sites. Generic names may delay troubleshooting efforts.
5. Click **Submit**.

   Note: *After the new host name is entered, the unit must be restarted. This is the only change that requires a restart. Select the physical restart button on the left side of the BGW.*

Figure 60 BGW Site Name

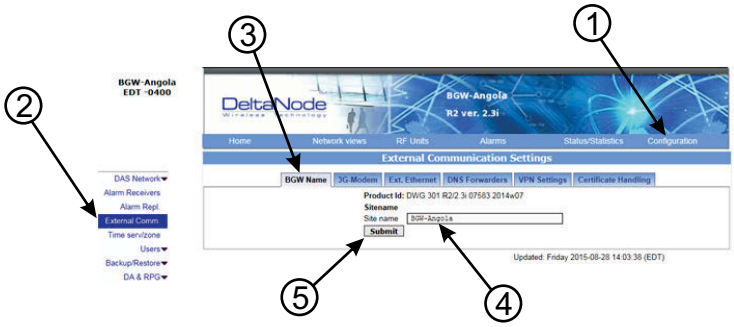

EXT Ethernet

In order for the BGW to be able to communicate outward, the Ext Ethernet connection has to be programmed. Consult with your Internet service provider or IT department for the IP address, Netmask and Gateway IP address settings.

Figure 61 BGW External Communications

VPN Settings

On occasions, the BGW will be set up behind a firewall. To be able to access the BGW from external locations the Primary BGW settings will need to be configured to allow access. Consult with your IT department for these parameters.

Bird Technologies offers monitoring services. When these services are contracted, enter the Bird parameters in the Secondary BGW settings so that system alarms are correctly forwarded to the Bird NOC.

Figure 62 BGW VPN Settings

Time Zone

To ensure that alarms are correctly labeled with the local time the time zone for the BGW will need to be set.

1. Select **Configuration**. See Figure 63.
2. Click **Time serv/zone**.
3. Select the **Time and Time zone** Tab.
4. Select the local time zone from the drop-down menu.
5. Click **Submit**.

Figure 63 BGW Time Zone Settings

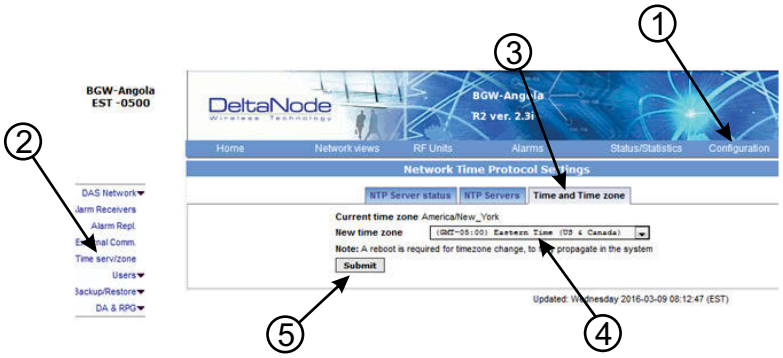

NTP Servers

NTP servers provide accurate clocks for the BGW. Utilizing multiple sources prevents clock issues as a result of one server becoming corrupt or dropping out of contact. The BGW is compatible with NTP version 4 servers. The NTP settings in the image below are the default for Redhat servers.

1. Select **Configuration**.
2. Click **Time serv/zone**.
3. Select the **NTP Servers** Tab.
4. Enter the NTP Server information. The FQDN settings are reserved for deployments utilizing the CGW.
5. Click **Submit**.

If no Internet access is available, the BGW will create its own clock to give the sub-nodes of the system a valid NTP service.

Figure 64 NTP Server Settings

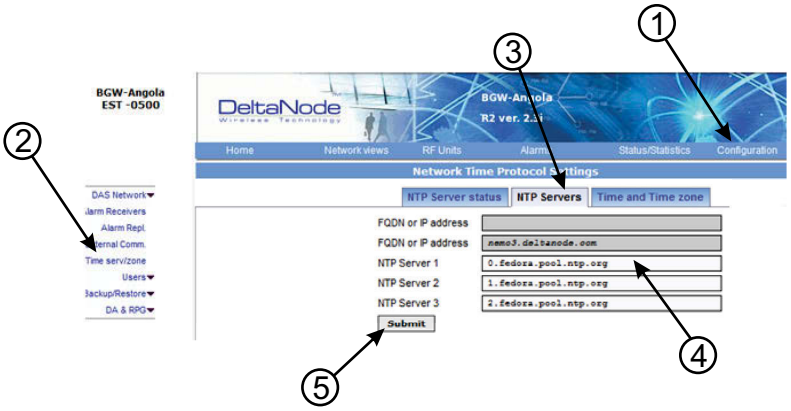

Email Server

The BGW is capable of emailing alarms directly to select email addresses. Access the set up function via Configuration, Alarm Receivers and Server Prop.

Consult with your IT department for configuration settings.

1. Select **Configuration**.
2. Click **Alarm Receivers**.
3. Select the **Server Prop.** Tab.
4. Enter the Email Server information. Consult with your IT department for configuration settings.
5. Click **Save and Apply**.

Figure 65 Email Server Settings

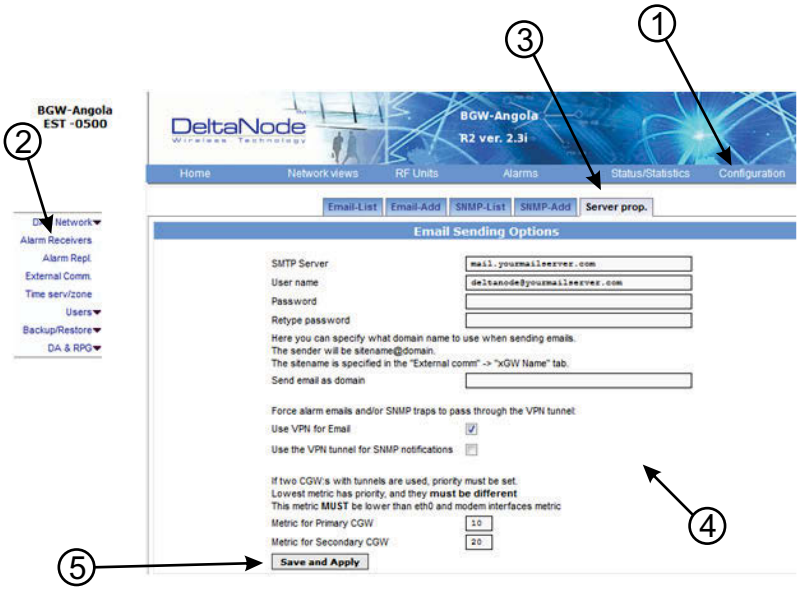

BIU Configuration

The initial screen for the BIU provides basic information such as name, serial number, part number and active alarms. The Locate me! button causes an LED to flash on the unit so that the module can be identified in the chassis.

In the left menu, notice the RF 1 and RF 2. The BIU has two RF paths or strips that are correlated to the two RF inputs on the BIU card. Each RF path has independent settings that can be accessed via the appropriate selection.

Figure 66 BIU Welcome Screen

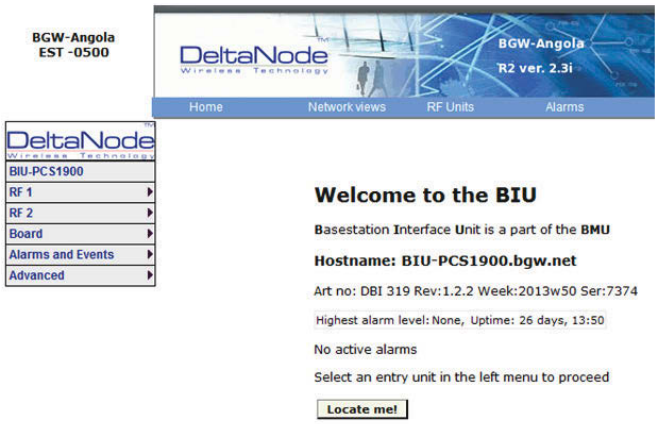

BIU RF1 Status

This page shows the current status and configuration of the BIU.

Figure 67 BIU RF1 Status

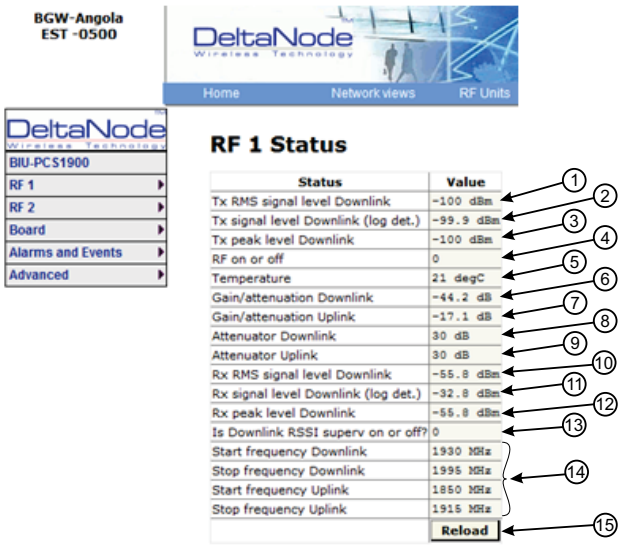

Item	Description
1	Downlink RMS value leaving the BIU card to the ICU/FOI. Good for measuring GSM and UMTS levels.
2	Downlink log detector signal leaving the BIU card to the ICU/FOI.
3	Peak downlink RF value exiting the BIU card on the select path.
4	0=RF is set to Off (attenuation is set to maximum). 1= RF is set to On. **Note**: This is only in reference to one of the two BIU RF paths/strips.
5	Temperature of the BIU card.
6	This measurement is the actual loss of the downlink RF signal in the BIU taking into account raw or inherent loss of the card plus the adjustable attenuator.
7	This measurement is the actual gain or loss on the uplink RF signal in the BIU taking into account raw or inherent gain of the card plus the uplink adjustable attenuator.
8	Adjustable downlink attenuator setting for the selected RF path. **Note**: If the downlink path is turned off (see #4) the attenuator value is automatically set to maximum attenuation. When RF is turned on, the setting of the adjustable attenuator will be shown.
9	Adjustable uplink attenuator setting for the selected RF path. **Note**: If the downlink path is turned off (see #4) the attenuator value is automatically set to maximum attenuation. When RF is turned on, the setting of the adjustable attenuator will be shown.
10	Calculated downlink RMS value entering the BIU card from the BTS. **Note**: This is the downlink into the BIU card and not an uplink value.
11	Calculated downlink value entering the BIU card from the BTS . **Note**: This is the downlink into the BIU card and not an uplink value.
12	Peak downlink RF value entering the BIU card on the select path. **Note**: This is the downlink into the BIU card and not an uplink value.
13	0=Downlink alarm is set to Off. 1= Uplink alarm is set to On.
14	Bandwidth of the BIU card
15	Pressing Reload will refresh the page

BIU RF1 Settings

This page will allow the user to change the attenuator values in the BIU for the path selected.

Figure 68 BIU RF1 Settings

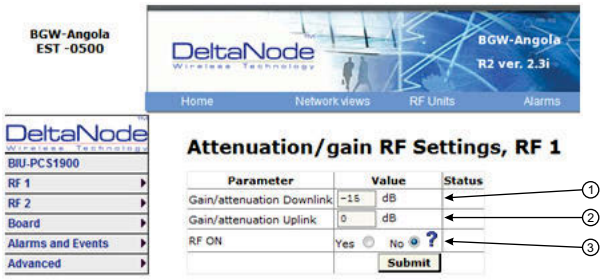

Item	Description
1	Attenuator setting for the downlink path. Enter a value from -14 to -44 (range varies depending of frequency band). **Note**: Click Submit after entering value.
2	Attenuator/Gain setting for the uplink path. Enter a value from -17 to 12 (range varies depending of frequency band). Note that the BIU has raw gain in the uplink path on certain BIU types (gain can be determined by positive value in the setting range. A selection of 12 indicates full gain of 12dB in the BIU. A selection of 9 will decrease the BIU uplink output by 3dB. A selection of 0 will decrease the BIU uplink output by 12dB. A selection of -17 will decrease the BIU uplink output by 29dB. **Note**: Click Submit after entering value.
3	This selection turns the uplink path On or Off (maximum attenuation setting).

BIU Hardware Test Points

This page shows various test point measurements used for status and troubleshooting purposes.

Figure 69 BIU Hardware Test Points

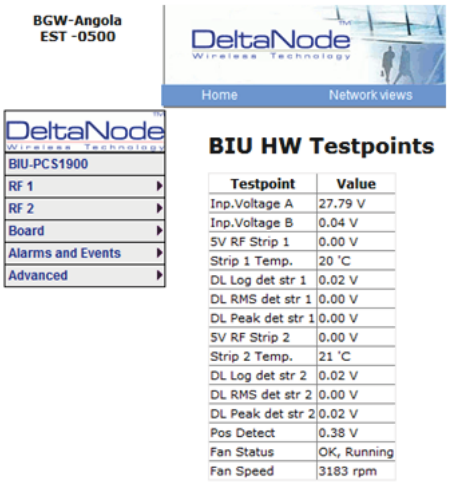

Testpoint	Value
Inp.Voltage A	27.79 V
Inp.Voltage B	0.04 V
5V RF Strip 1	0.00 V
Strip 1 Temp.	20 °C
DL Log det str 1	0.02 V
DL RMS det str 1	0.00 V
DL Peak det str 1	0.00 V
5V RF Strip 2	0.00 V
Strip 2 Temp.	21 °C
DL Log det str 2	0.02 V
DL RMS det str 2	0.00 V
DL Peak det str 2	0.02 V
Pos Detect	0.38 V
Fan Status	OK, Running
Fan Speed	3183 rpm

BIU Alarm List

This page show all current and past alarms.

- Green indicates that the alarm has cleared.
- Yellow indicates a warning alarm.
- Red indicates a service affecting alarm.

Figure 70 BIU Alarm List

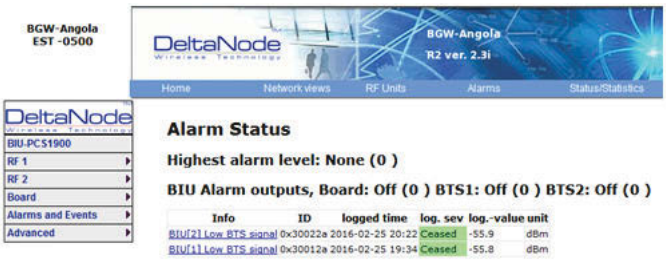

Info	ID	logged time	log. sev	log.-value	unit
BIU[2] Low BTS signal	0x30022a	2016-02-25 20:22	Ceased	-55.9	dBm
BIU[1] Low BTS signal	0x30012a	2016-02-25 19:34	Ceased	-55.8	dBm

BIU Change History

This page shows a history of all setting changes.

Figure 71 BIU Change History

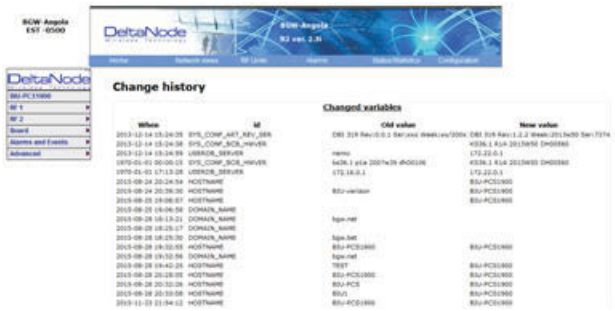

BIU Alarm configuration RF1

This page allows for certain alarm thresholds of the BIU to be changed.

Figure 72 BIU Alarm configuration

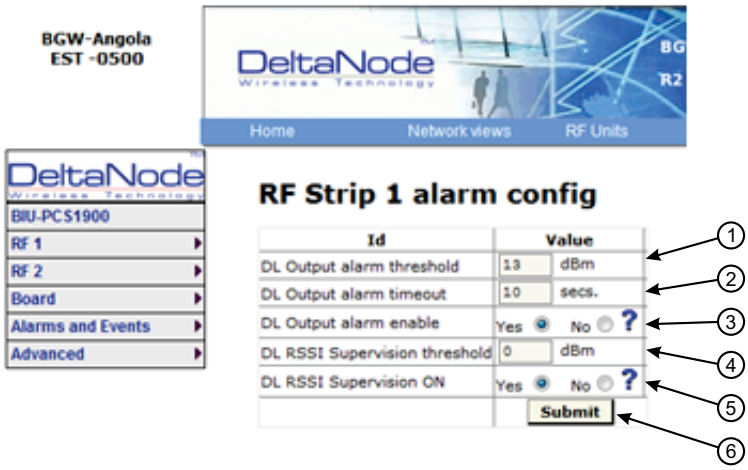

Item	Description
1	Set the value in dBm that the BIU downlink output has to exceed in order to create an alarm
2	Set the value in seconds for the amount of time that the BIU downlink output has to be above the threshold level in order to create an alarm.
3	Enables or disables BIU threshold/high power alarm.
4	Set the value in dBm that the BIU downlink output has to drop below in order to create an alarm.
5	Enables or disables BIU supervision/low level alarm.
6	Click Submit after entering value(s).

BIU Advanced Network Setup

This page allows for manual override of network settings.

Default configurations should be used with DHCP set to Yes.

> **Note:** *Changing DHCP to "No" can cause loss of communications to the BIU and should only be used in very specific situations.*

Figure 73 BIU Network Setup

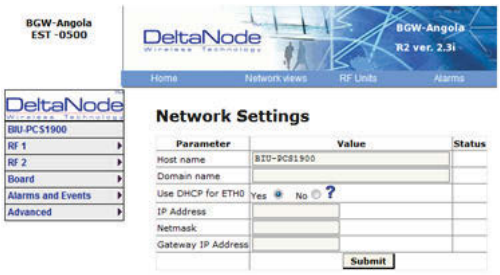

BIU Advanced Menus

These menus provide information only status and settings of the BIU that are typically used by the manufacturer.

BIU > Advanced>HW config

BIU > Advanced>AD-values RF1

BIU > Advanced>AD-values RF2

BIU > Advanced>ADC raw

BIU > Advanced>Software status

BIU > Advanced>Process status

BIU > Advanced>System status

BIU Application Handling

The application handling page allows for stopping software functions and rebooting software programs.

Alarm Handler: Selecting Reboot (circular icon) will clear all the alarms in the history for the card selected. This is helpful after turning a system up and wanting to clear alarm log created during the installation and turn up.

> **Note:** *Only the Reboot command should be used by the technician. All other functions should only be used under supervision of Bird engineering as they may cause data corruption if not initiated properly. The radio button will stop a process and can have negative affects on the function of the DAS.*

Figure 74 BIU Application Handling

BIU Reset to Factory Default

To reset the BIU to factory default, carefully press the “Reset” button [located below the **UL In 1** QMA connector] for 10 seconds. This is helpful when a card fails to appear in the Configuration menu.

Figure 75 BIU Reset

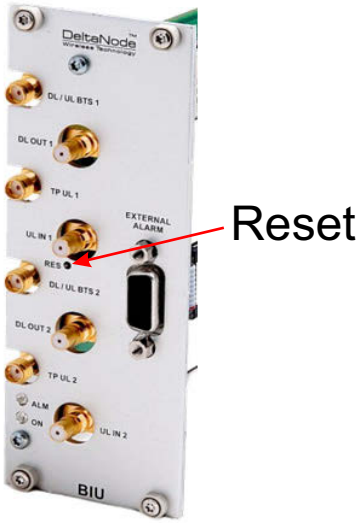

FOI Configuration

The initial screen for the FOI provides basic information such as name, serial number, part number and active alarms. The **Locate me!** button causes an LED to flash on the unit so that the module can be identified in the chassis.

Figure 76 FOI Welcome Screen

Figure 77 FOI Welcome Screen SW Version 3.9, DOI401

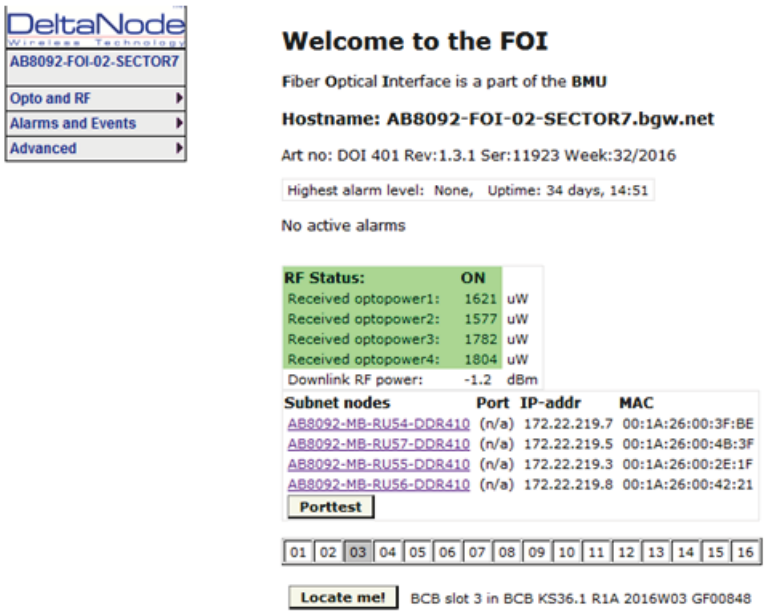

FOI Opto Status

This page will show the current status and configuration of the FOI.

Figure 78 FOI Opto Status

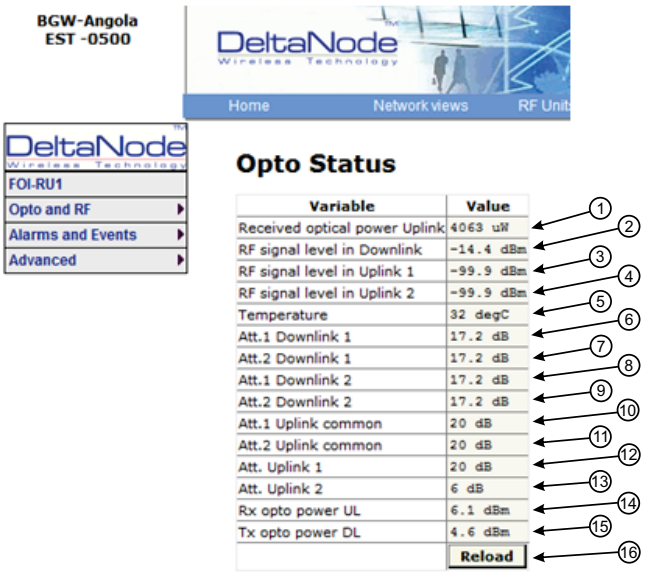

Item	Description
1	Fiber optic received optical power from the remote unit. See item 1 in Figure 79 for measurement location.
2	RF downlink power to the remote. See item 2 in Figure 80 for location on the FOI circuitry. Note that with no RF power into the BIU the FOR will still show signal in the downlink. This is the sub-carrier that is typically 10 dB below the anticipated RF level.
3	RF path 1 input power from the remote. See item 3 in Figure 79 for location on the FOI circuitry.
4	RF path 2 input power form the remote. See item 4 in Figure 79 for location on the FOI circuitry.
5	Temperature of the FOI card
6	Downlink path 1 attenuator #1 setting. See item 6 in Figure 80 for location on the FOI circuitry. Value may be slightly different than the value in Settings due to changes in temperature compensation.
7	Downlink path 1 attenuator #2 setting. See item 7 in Figure 80 for location on the FOI circuitry. Value may be slightly different than the value in Settings due to changes in temperature compensation.
8	Downlink path 2 attenuator #1 setting. See item 8 in Figure 80 for location on the FOI circuitry. Value may be slightly different than the value in Settings due to changes in temperature compensation.
9	Downlink path 2 attenuator #2 setting. See item 9 in Figure 80 for location on the FOI circuitry. Value may be slightly different than the value in Settings due to changes in temperature compensation.
10	Uplink common path attenuator #1 setting. See item 10 in Figure 79 for location on the FOI circuitry. Value may be slightly different than the value in Settings due to changes in temperature compensation.
11	Uplink common path attenuator #2 setting. See item 11 in Figure 79 for location on the FOI circuitry. Value may be slightly different than the value in Settings due to changes in temperature compensation.
12	Uplink path #1 attenuator setting. See item 12 in Figure 79 for location on the FOI circuitry. Value may be slightly different than the value in Settings due to changes in temperature compensation.
13	Uplink path #2 attenuator setting. See item 13 in Figure 79 for location on the FOI circuitry. Value may be slightly different than the value in Settings due to changes in temperature compensation.
14	Calculated uplink optical input from the remote unit. See item 14 in Figure 79 for location on the FOI circuitry.
15	Calculated downlink optical output. See item 9 in Figure 80 for location on the FOI circuitry.
16	Pressing Reload will refresh the page

Figure 79 FOI Uplink Measurement Locations

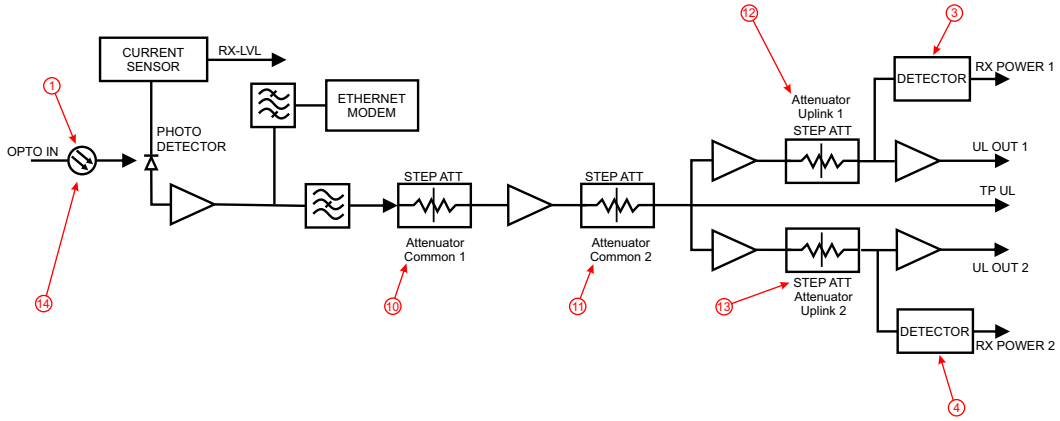

Figure 80 FOI Downlink Measurement Locations

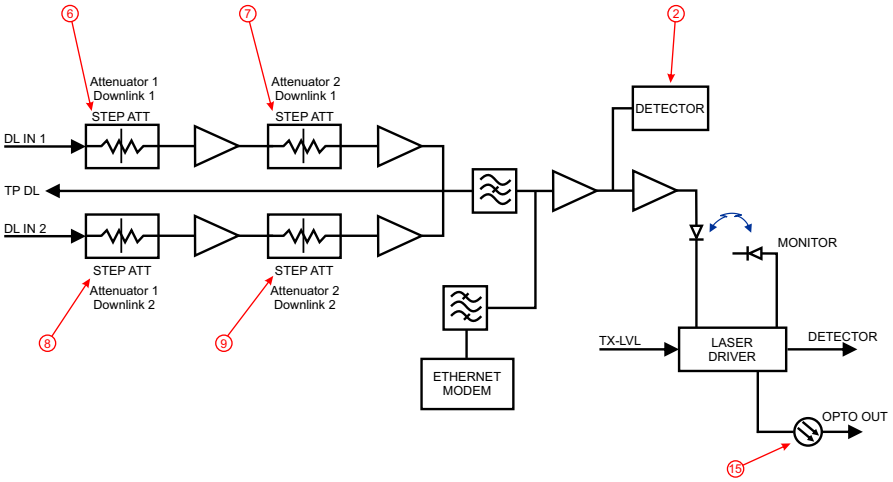

Figure 81 FOI Opto Status DOI401

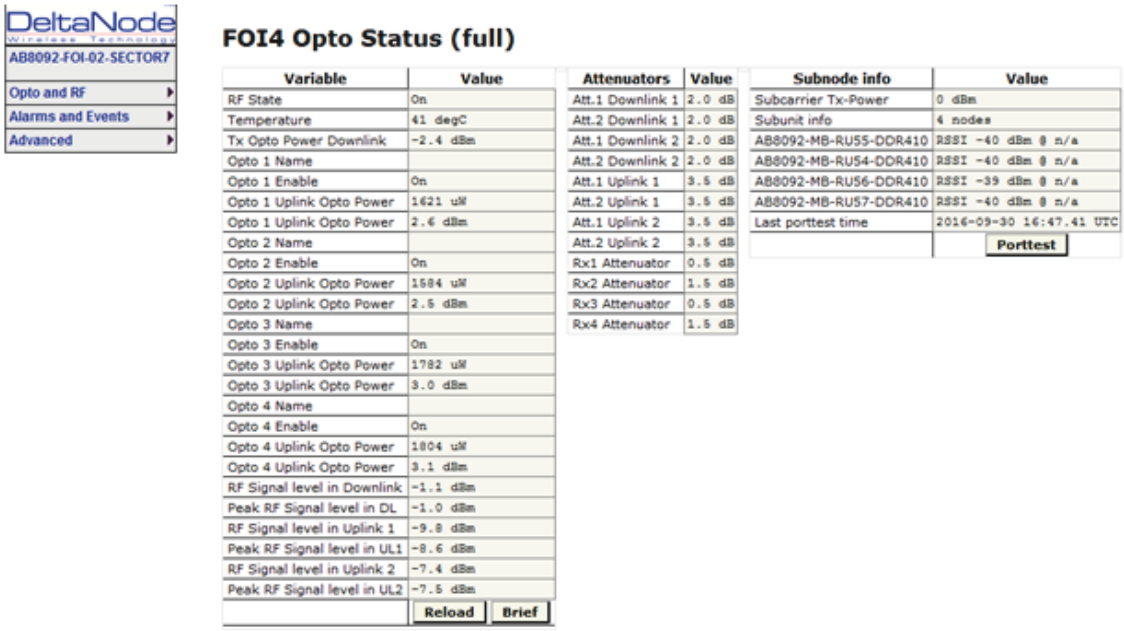

FOI Opto and Attenuator Settings

This page will allow changes to be made to the FOI values

Figure 82 FOI Opto and Attenuator Settings

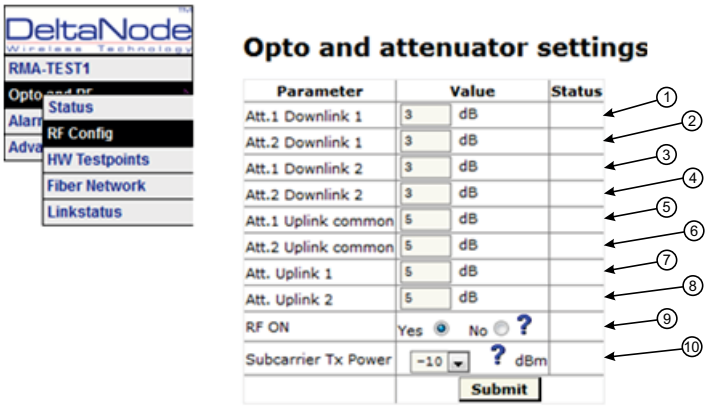

Item	Description
1	Downlink path 1 attenuator #1. See item 1 in Figure 83 for measurement location.
2	Downlink path 1 attenuator #2. See item 2 in Figure 83 for location on the FOI circuitry.
3	Downlink path 2 attenuator #1. See item 3 in Figure 83 for location on the FOI circuitry.
4	Downlink path 2 attenuator #2. See item 4 in Figure 83 for location on the FOI circuitry.
5	Uplink common path attenuator #1. See item 5 in Figure 84 for location on the FOI circuitry.
6	Uplink common path attenuator #2. See item 6 in Figure 84 for location on the FOI circuitry.
7	Uplink path 1 attenuator. See item 7 in Figure 84 for location on the FOI circuitry.

Item	Description
8	Uplink path 2 attenuator. See item 8 in Figure 84 for location on the FOI circuitry.
9	RF ON Yes set the UL values as selected above. RF No turns off laser. **Note:** *Setting to "No" will disconnect connectivity to the remote(s)*
10	Subcarrier TX Power is used for the communications and control signaling of the DAS. • Default setting is -10dBm for single port FOI cards and 0dBm for the 4-port FOI card. • The value may need to be changed in situations where fiber loss is near the maximum and communications issues arise. Unnecessarily increasing the subcarrier TX power may affect RF performance of the DAS.

Figure 83 Downlink Opto and Attenuator Settings

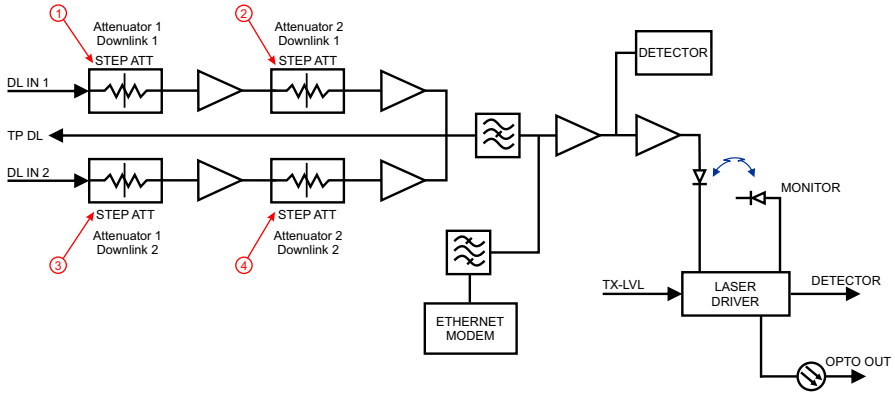

Figure 84 Uplink Opto and Attenuator Settings

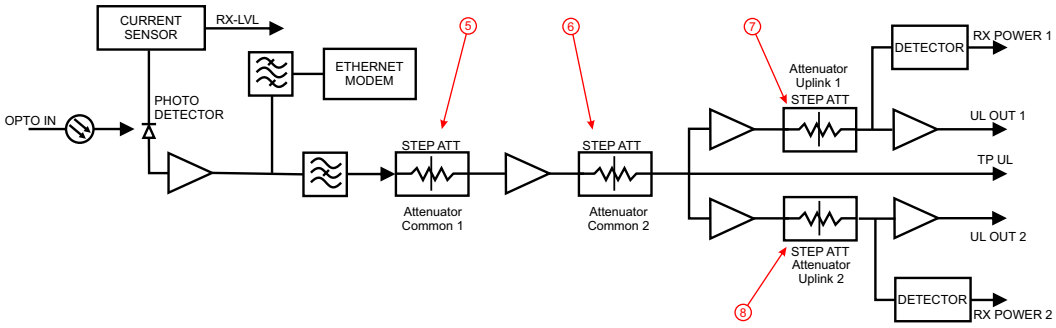

Figure 85 DOI401 FOI Opto and Attenuator Settings

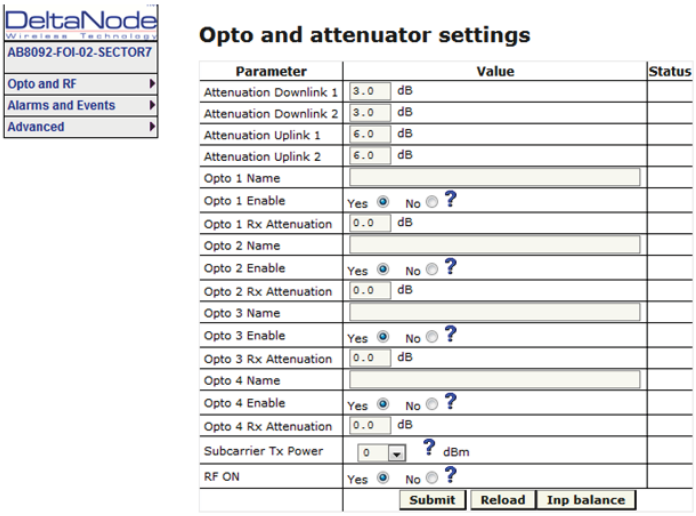

FOI Fiber Network Subunits

This page provides a visual indication on the fiber link status for each connection to the FOI.

Figure 86 FOI Fiber Network Subunits

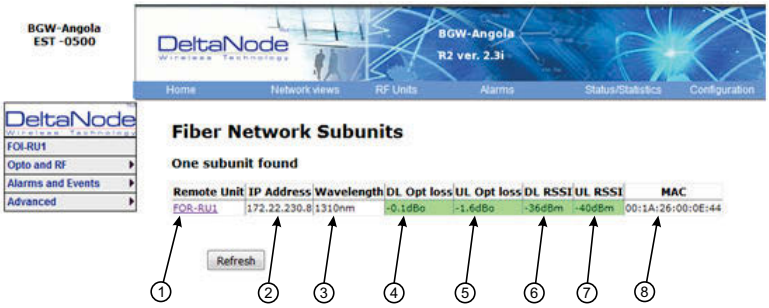

Item	Description
1	Selecting the remote link will direct the browser to the Remote Unit page.
2	Network IP address of the FOI card.
3	Optical wavelength of the transmit laser in the FOI card.
4	Subcarrier optical loss between the FOI and FOR in the downlink path.
5	Subcarrier optical loss between the FOR and FOI in the uplink path.
6	Subcarrier power to the modem in the downlink path of the FOR - Range should be -30 to -60. If the level is too high or too low communication and other system problems may occur.
7	Subcarrier power to the modem in the uplink path of the FOI - Range should be -30 to -60. If the level is too high or too low communication and other system problems may occur.
8	MAC address of the FOI card

Figure 87 DOI401 FOI Fiber Network Subunits

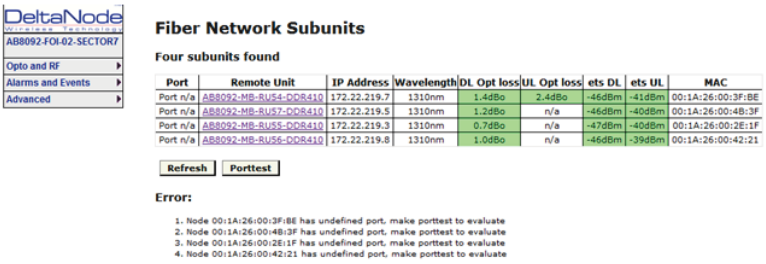

FOI Network Setup

This page allows for manual override of network settings. Default configurations should be used with DHCP set to Yes.

> **Note:** *Changing DHCP to "No" can cause loss of communications to the BIU and should only be used in very specific situations. Do not enter IP configuration data in other associated settings.*

Figure 88 FOI Network Settings

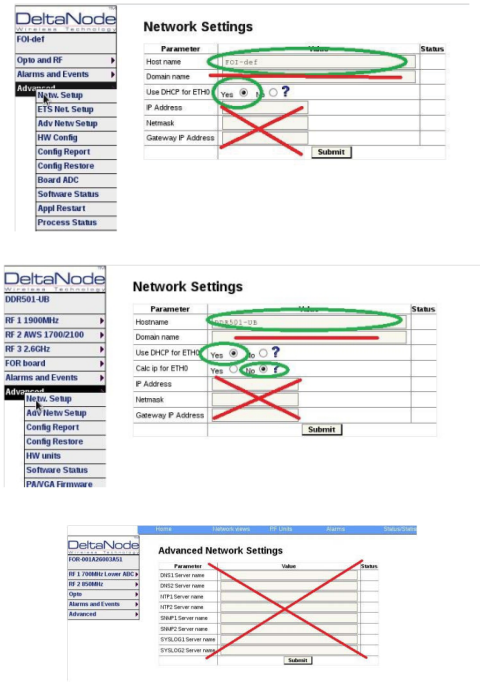

FOI Reset to Factory Default

To reset the FOI to factory default, carefully press the “Reset” button (see Figure 89) for 10 seconds. This is helpful when a card fails to appear in the Configuration menu.

Figure 89 FOI Reset Button

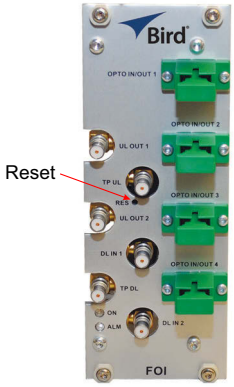

FOR

The initial screen for the FOR provides basic information such as name, serial number, part number and active alarms. The Locate me! button causes an LED to flash on the chassis so that the unit can be identified in the field.

> **Note:** *If the fiber is just now connected to the FOI card, it could take up to 30 minutes for the FOI to assign an IP address to the FOR. See section for* "Moving Remotes to Different FOI Port" on page 92 *for details on how to quicken the IP assignment.*

Figure 90 FOR Welcome Screen

Figure 91 FOR Welcome Screen

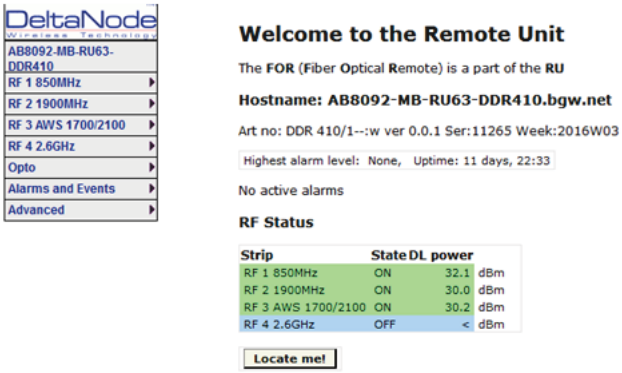

RF Strip 1 XXX MHz Status

Figure 92 FOR RF 1 Status

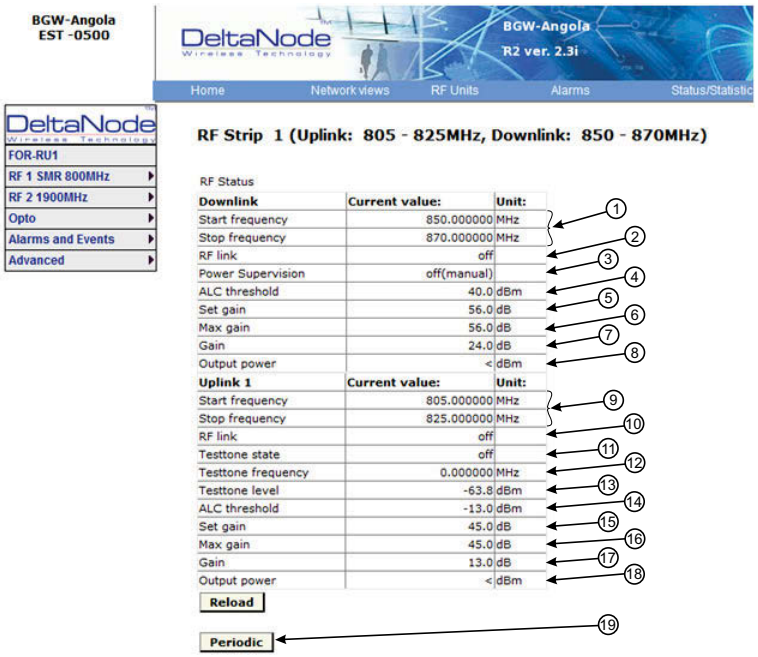

Item	Description
1	Downlink frequency band for the RF path/strip selected
2	RF link setting for the downlink path: On or Off.
3	Setting of the downlink ALC threshold.
4	Downlink low power alarm turned On or Off.
5	Gain setting for the RF path under review.
6	Maximum allowed gain will always be the same as the set gain except in special builds.

Item	Description
7	The amount of actual gain used by the system. Might not achieve max gain setting if ALC is in operation. If the set gain is 56 as it is above, RF is turned on and the actual gain in line 7 is less than 56 then the system is being overdriven and ALC is kicking in. Reduce gain. Suggest starting with the value displayed in line 7 since this is the most gain that is being used.
8	Output power of the amplifier for the path under review.
9	Uplink frequency band for the RF path/strip selected
10	RF link setting for the uplink path: On or Off.
11	Status of uplink test tone signal. Test tone automatically turns off after 60 minutes.
12	Uplink test tone frequency setting.
13	Uplink test tone level. Not adjustable. Accounts for losses in internal duplexers, if any.
14	Uplink ALC threshold setting.
15	Gain setting in the uplink path.
16	Maximum allowed gain set by the system.
17	Actual gain being used in the uplink path. The figure might not match gain setting if ALC is in operation.
18	Uplink output to the FOI. **Note:** *If the uplink path is set to Off a reading of "<" is returned.*
19	Periodic enables a constant update of the status screen.

RF Strip 1 XXX MHz Configuration

Figure 93 FOR RF 1 Configuration

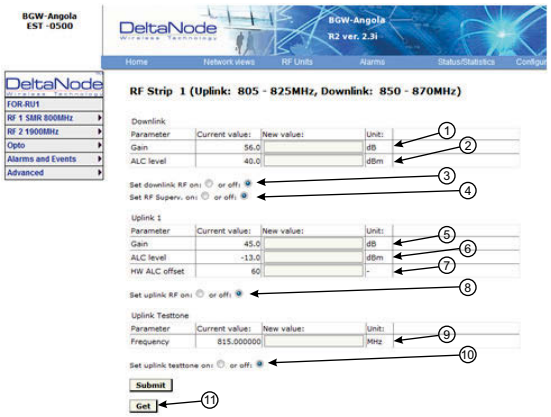

Item	Description
1	Downlink gain setting for RF path under review.
2	Downlink ALC setting for RF path under review. The factory default is set at the rated power of the remote unit (i.e. DDH is set to 43dB). The level could be set lower for specific situations. Note that the factory level is set at the antenna port. If remote is shutting down due to being over driven it is suggested to reduce the ALC level by one or two dB to reduce the number of alarms.
3	Turns downlink RF on or off.

Item	Description
4	Turns downlink low power alarm on or off.
5	Uplink gain setting for RF path under review.
6	Uplink ALC setting for RF path under review. This is the threshold at which the system will start reducing further gain to prevent increases in uplink RF to the FOI. After 10dB decrease in gain an uplink alarm will be triggered **Note:** *Should be left a factory default. Only change if FOR uplink gain is changed. If gain is increased on FOR uplink then the same value should be decreased on the ALC.* **Example:** Changing the UL FOR gain from 12 to 17 would require ALC to be changed from -13 to -18.
7	Hardware ALC offset measured in tenths of a dB. Default setting of 60 (6dBm) should be used for most applications. Should the software not be able to reduce uplink gain fast enough after the ALC threshold has been exceed, hardware attenuation will be added to protect the uplink path. In the example above, the hardware attenuation will trigger at -7dBm (-13dBm ALC threshold minus 6dBm HW ALC offset = -7dBm)
8	Turns uplink RF on or off.
9	Sets uplink test tone frequency. Must be within uplink frequency limits of the RF module.
10	Turns on uplink test tone. Test tone times out after 60 minutes.
11	Retrieves current FOR settings from system.

RF Strip 1 XXX MHz Configuration Software Version 3.9

Software release 3.9 introduces settable Return Loss measurements and control over alarms. The default interval setting is “0” indicating the return loss alarm feature is turned off. Return loss alarms are often disabled when there is a passive antenna network installed beyond the remote.

Figure 94 FOR RF 1 Configuration, Software Version 3.9

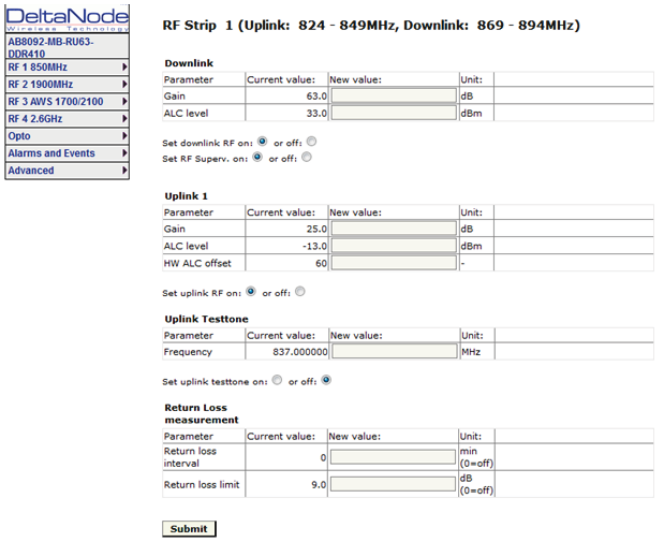

FOR Opto Status

Figure 95 FOR Opto Status

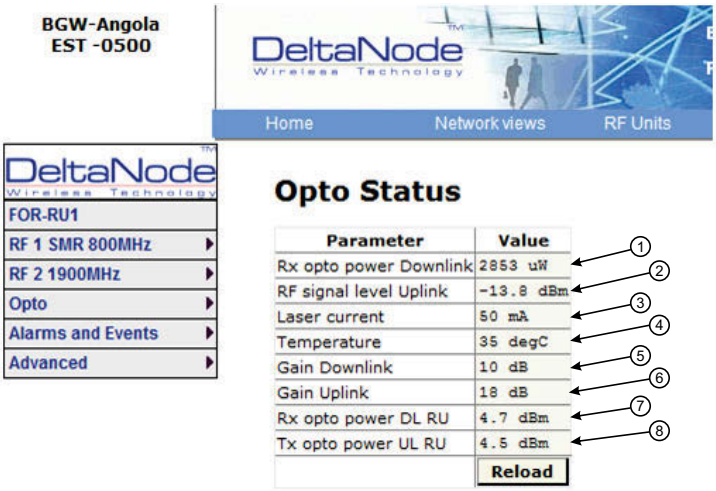

Item	Description
1	Optical power received from the FOI. See item 1 in Figure 96 for measurement location.
2	Uplink signal being fed into the FOR uplink laser circuit. See item 2 in Figure 97 for measurement location.
3	Laser current for the Remote Unit FOR. Should be less than 50mA.
4	Temperature of the Remote Unit FOR board.
5	Total gain of the FOR in the downlink. Note that RF Out 1 and 2 are wide band (FM to 2600MHz) that feed band specific RF amplifiers in the following VGA stage.
6	Total gain of the FOR in the uplink path. Note that RF In1 and In2 are wide band (FM to 2600MHz) that are signals from the uplink frequency specific amplifiers.
7	Calculated downlink signal being received from the FOI. See item 1 in Figure 96 for measurement location. Takes into consideration optical wavelength and temperature compensation.
8	Calculated uplink signal being transmitted to the FOI (FOR input from VGA + FOR uplink gain/attenuation). See item 3 in Figure 97 for measurement location.

Figure 96 FOR Downlink Schematic

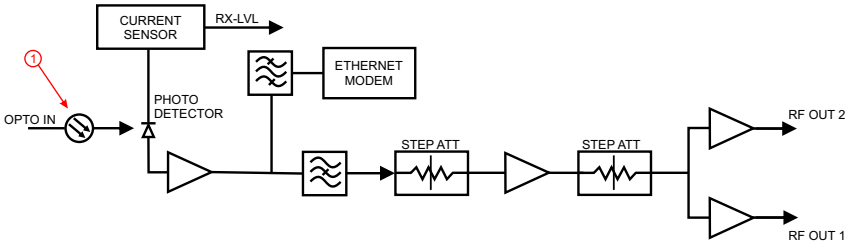

Figure 97 FOR Uplink Schematic

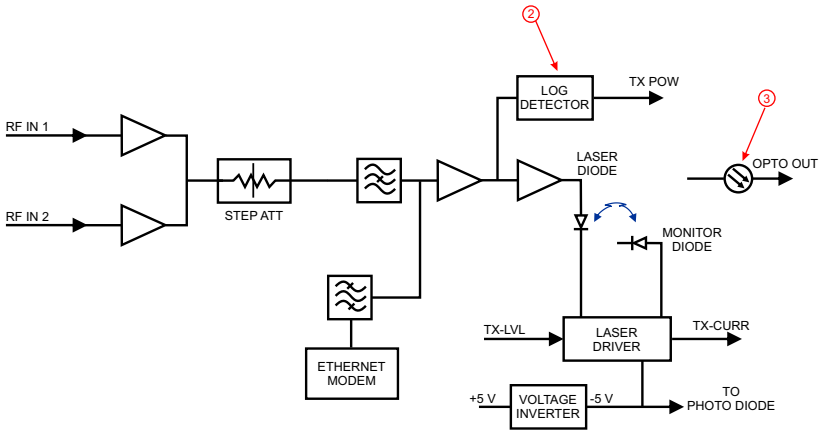

FOR Opto Gain and Attenuation Settings

Figure 98 FOR Opto Gain Settings

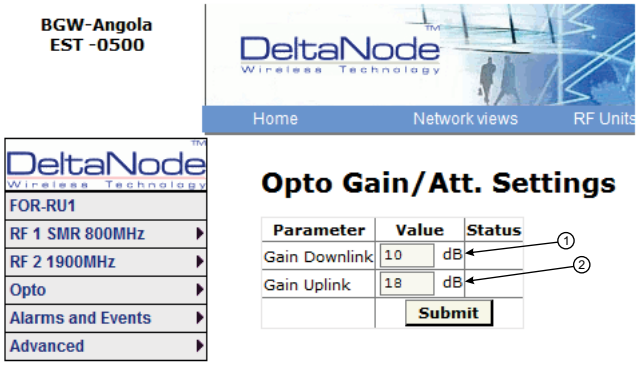

Item	Description
1	FOR gain in the downlink path. Range is typically from -20 to +20. FOR downlink path has inherent/raw gain of +20dB (FM to 2600MHz). • A setting of +20 indicates no attenuation so FOR will have +20dB gain (+20dB gain minus 0dB attenuation). • A setting of +10 will have 10 of attenuation so this stage will have 10dBm of gain (+20dB gain minus 10dB of attenuation). • A setting of 0 will have 20dB of attenuation so this stage will have unity gain (+20dB gain minus 20dB of attenuation). • A setting of -10 will have 30dB of attenuation so this stage will have 10dB of loss (+20dB gain minus 30dB of attenuation). • A setting of -20 will have 40dB of attenuation so this stage will have 20dB of loss (+20dB gain minus 40dB of attenuation).
2	FOR gain in the uplink path. Range is typically from 0 to +20dBm (FM to 2600MHz). • A setting of +20 will have full gain of +20dBm. • A setting of +10 will have +10dB gain. • A setting of 0 will have no gain. • Factory default should be used unless high loss in fiber. Note that changes in Gain uplink will require changes in the FOR UL ALC level.

FOR Fiber Network Settings

This page allows for manual override of network settings. Default configurations should be used with DHCP set to Yes.

Note: *Changing DHCP to "No" can cause loss of communications to the BIU and should only be used in very specific situations. Do not enter IP configuration data in other associated settings.*

Figure 99 FOR Network Settings

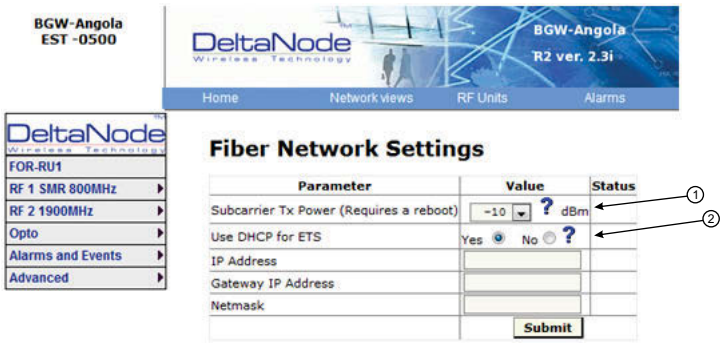

ITem	Description
1	Subcarrier Tx Power is used for the communications and control signaling of the DAS. Default setting is -10. The value may need to be changed in situations where fiber loss is near the maximum and communications issues arise. Unnecessarily increasing the subcarrier TX power may affect RF performance of the DAS.
2	Default seeing of Yes should be used except for special applications.

Figure 100 More FOR Network Settings

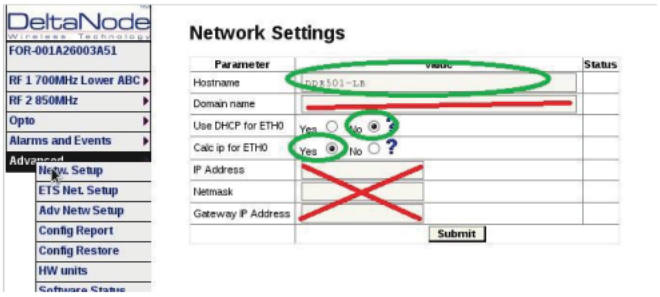

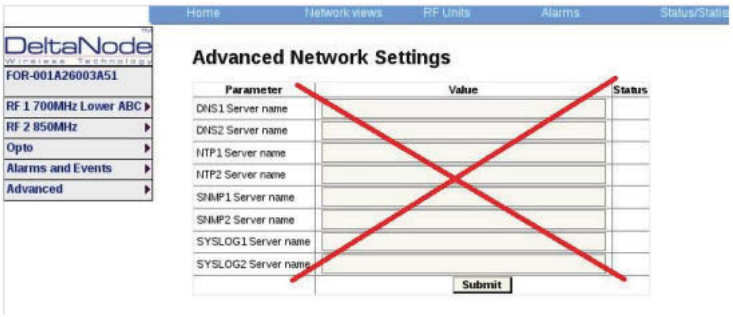

FOR Application Handling

The application handling page allows for software reset and rebooting functions.

Note: *Only the Reboot command should be used by the technician. All other functions should only be used under supervision of Bird engineering as they may cause data corruption if not initiated properly.*

Figure 101 FOR Application Handling

Slave FOR

A Slave FOR is when a remote has a second FOR installed. The Slave FOR is most likely to be used when the remote is configured for MIMO or has multiple amplifiers in the same band or has redundant fiber.

Settings for the Slave FOR is the same as the main FOR except, “Calc ip for ETH0 is set to “No”.

Figure 102 Slave FOR Network Settings

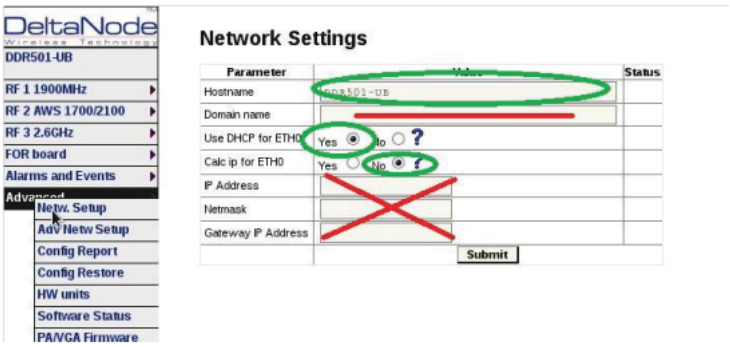

Naming Components

Proper naming of individual components in the DAS is critical to troubleshooting. A recommendation is to start all component names with their function such as "BIU", "FOI" or "FOR". For example: "BIU-850Sector1".

You may use any combination of alphanumeric characters and the special character of dash "-". Do not use any other special characters or space.

- 0 through 9
- a through z
- A through Z
- -

Component names are limited to 56 characters.

1. Select the component to be named from the Configuration menu.

Figure 103 Component Selection

2. Use the Locate Me button to verify which cards is being accessed.

Figure 104 Locate Me Button

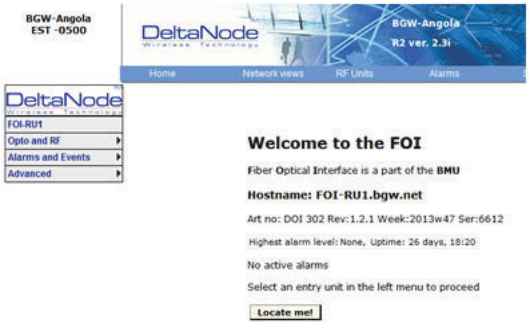

3. Go to Advanced>Netw Setup
4. Enter the new card name in the Host Name field. See Figure 105.
5. Select submit.

Figure 105 Unit Naming

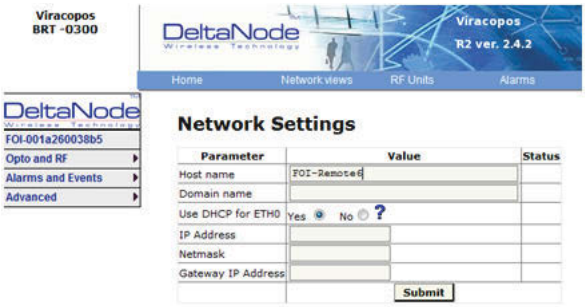

6. Go to Advanced > Appl restart.
7. Select the Reboot icon at the bottom of the menu. See Figure 106.
8. Select "YES- Restart Process"

Note: *After rebooting, it can take up to 5 minutes before the unit shows up in the GUI.*

Figure 106 Naming Reboot

9. After all the units have been renamed, go to the Configuration menu and select the correct card type.
10. Highlight all the cards in the right column that had name changes and then select “<<“. Select “Submit” This will remove the old names from the DAS Configuration.
11. Highlight all the cards in the left column with the new names and then select “>>”. Select “Submit”. This will move the new card names into the DAS configuration.

Table 67 Submit Newly Named Units

12. Select Network Views > All to confirm that all cards are now part of the configuration.

Moving Remotes to Different FOI Port

All DAS components are assigned IP addresses by the BGW. The FOR in the Remote is the assigned an IP address as a subunit of the FOI to which it is connected. When the Remote is moved to a different FOI one of several actions must take place:

1. The lease on the Remote IP address must be given time to expire. This could take up to 30 minutes. Once the current IP lease expires, the new FOI will then assign the correct IP address to the Remote.
2. Manually power cycle the Remote. During the reboot process, the Remote will release the old IP address and have the correct IP address assigned by the new FOI.
3. Communications to the remote can only occur when the remote has the correct IP address. Before moving the fiber, access the FOR via the GUI. In the advanced settings, reboot the FOR. As soon as the reboot has been initiated, quickly move the head end fiber to the new FOI port. When the Remote finishes the rebooting process, the new FOI will assign the correct IP address.

Replacing Master Unit Cards

All DAS components are assigned IP addresses by the BGW. When a card is replaced, the card must be assigned a new IP address by the BGW. On rare occasions, the BGW may have not be able to assign an IP address to the new card. This is easily corrected by removing the card from the Master Unit chassis (with ESD strap attached) and then re-install the card. The BGW will then assign the correct IP address.

Moving Master Unit Cards

Occasionally, cards need to be moved to different slots in the Master Unit.

CAUTION
Always use an ESD strap when installation and removing cards. Failure to comply may result in permanent disabling damage to the module.

1. Move the card to the new slot.
2. Ensure there is an Ethernet connection for the new card location on the backplane of the Master Unit.
3. Wait for the card to complete the boot process. If the card remains in the boot process (Green LED remains on for approximately 2 seconds and then off for one second) then the IP address may not have been assigned. Check Ethernet connection.
4. Log into the GUI to confirm software connectivity. On occasions the card will not show up after being moved.
    a. Go to the Configuration menu and remove the card (move from right to left) and then Submit. See Figure 107 on page 93.
    b. Select the card from the left menu and then add it back to the system on the right and then submit.
    c. Go to the Home menu. Log out of the BGW and then log back in.
    d. Go to Network Views and log into the card to verify GUI connection.

Figure 107 Manage System Modules

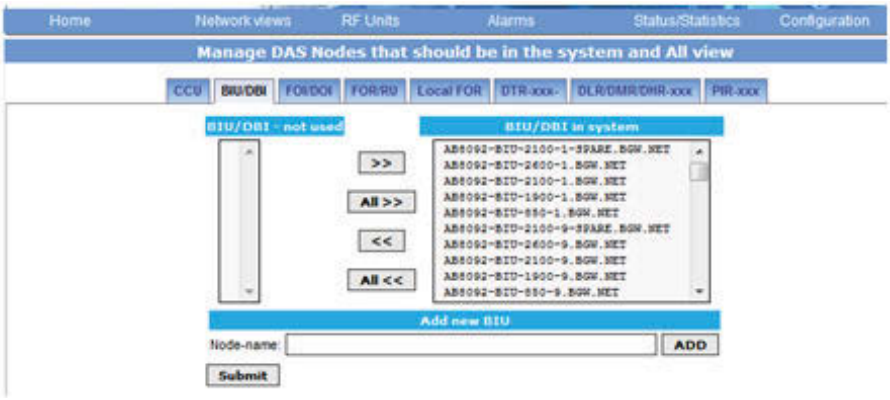

Preparations

The minimum of preparations necessary are to have the system documentation which should include the following items at least:

- The system layout and block schematic
- A connection diagram for the head-end Master Unit
- The type of connectors and tappers used to interface to the base station ports
- The number of carriers for each of the BIU that the base stations connects via
- Maximum output power for each service from the base stations
- Fiber losses should be documented beforehand so that you can compare what the system actually measures
- Sectorization information, which sectors should go to which remotes
- DAS calculator sheets showing the expected settings for each of the RF chains in uplink and downlink.
- Information about Ethernet connection if the system should be monitored by remote. How to connect it to the Internet for remote viewing unless you are using a modem.

Necessary tools

The tools necessary to commission the system includes:

- One laptop for changing the system settings, checking any alarms and status. Only software needed is a web browser. Operating system can be Windows, Linux or Mac as you prefer.
- Spectrum analyzer to measure the uplink. The system relies on test tone measurements in the uplink and therefore it is important to have equipment to measure them.
- SMA tool to be able to connect or disconnect BTS cables from the BIU.
- QMA adapter so you can measure signals directly on the head-end units such as the FOI, BIU, ICU and so on.

Software

No particular software is necessary except a modern graphical based web browser.

System Commissioning

Pre-requisites

- Establish Ethernet connection between the BGW and all cards
- Power up all equipment
- Ensure IP addresses have been assigned
  Cards will briefly flash green. Solid green indicates waiting for IP assignment
- Verify remote unit fibers are connected to correct FOI ports
- Set names for all components and add components to the system - See “Naming Components” section
- Connect BTS to the BIU ensuring proper attenuation for the BIU card being used

Commissioning Process

1. Once the fiber is connected and verified, turn FOI RF power on.
   Connect only one fiber port at a time and complete naming of remote. Otherwise, a second person will be needed at the remotes to identify the remote when “Locate Me” is enabled. This can be eliminated with good project management and labeling during the installation process.

Figure 108 FOI RF On

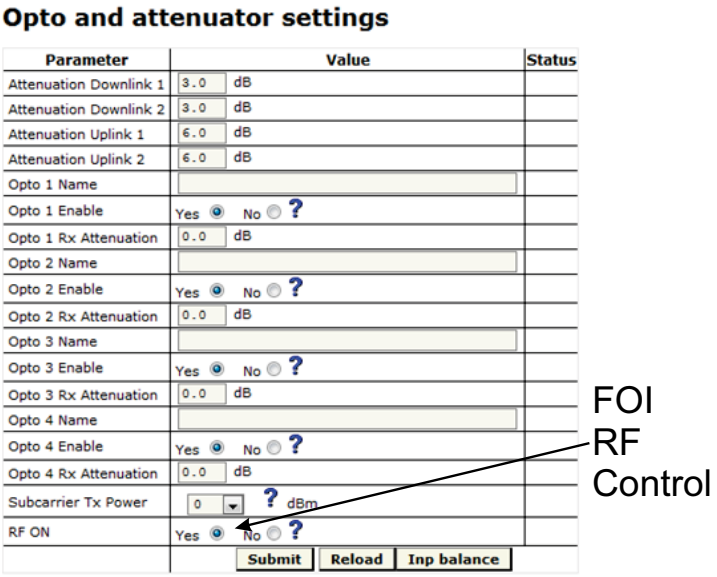

2. Enable the appropriate optical ports on the 4-port FOI
   Only enable the optical ports that are being used. Otherwise, the system will alarm with low optical levels on the unused ports.

Figure 109 Enable FOI Optical Ports

Opto and attenuator settings

Parameter	Value	Status
Attenuation Downlink 1	3.0 dB	
Attenuation Downlink 2	3.0 dB	
Attenuation Uplink 1	6.0 dB	
Attenuation Uplink 2	6.0 dB	
Opto 1 Name		
Opto 1 Enable	Yes ◉ No ○ ?	
Opto 1 Rx Attenuation	0.0 dB	
Opto 2 Name		
Opto 2 Enable	Yes ◉ No ○ ?	
Opto 2 Rx Attenuation	0.0 dB	
Opto 3 Name		
Opto 3 Enable	Yes ◉ No ○ ?	
Opto 3 Rx Attenuation	0.0 dB	
Opto 4 Name		
Opto 4 Enable	Yes ◉ No ○ ?	
Opto 4 Rx Attenuation	0.0 dB	
Subcarrier Tx Power	0 ? dBm	
RF ON	Yes ◉ No ○ ?	
	Submit Reload Inp balance	

Enable FOI Optical Ports

3. Go to FOI status and note RX Opto power UL.
   The laser transmits at 5000 uW. The difference between the 5000 uW transmit level and the receive level is the loss on the fiber.

Figure 110 RX Optical Power

FOI4 Opto Status

Variable	Value
RF State	On
Temperature	36 degC
Tx Opto Power Downlink	-1.9 dBm
Opto 1 Name	
Opto 1 Enable	On
Opto 1 Uplink Opto Power	2075 uW
Opto 1 Uplink Opto Power	3.7 dBm
Opto 2 Name	
Opto 2 Enable	Off
Opto 2 Uplink Opto Power	0 uW
Opto 2 Uplink Opto Power	< dBm
Opto 3 Name	
Opto 3 Enable	Off
Opto 3 Uplink Opto Power	0 uW
Opto 3 Uplink Opto Power	< dBm
Opto 4 Name	
Opto 4 Enable	Off

RX Optical Power

a. Starting with software release 3.9, there is an option to have the GUI calculate the fiber loss.

Figure 111 Calculated Optical Loss, Software version 3.9

DL and UL Optical Loss

Uplink

1. Set all values at default (factor setting may vary due to individual testing before shipping) for all bands
    a. BIU: -10dB
    b. FOI: -6, -6, -6
    c. FOR: +12
    d. Amp: +35 for low loss fiber, +45 for high loss fiber
2. Start with adjusting the high frequency band.
3. Turn RF on at the BIU. Ensure that only the RF strips being used have RF turned on.
4. Go to the FOR and turn the UL test tone on. Note the level being transmitted and the frequency. The level is set at the factory to compensate for losses between the RU output port and the amplifier. Levels will vary unit by unit.
5. Connect spectrum analyzer to the BIU BTS port and tune to the UL test tone frequency.
6. Measure the test tone level. Initial goal should be to set the UL test tone at the BIU BTS port to the same level as being transmitted at the RU (zero dB system gain).
    a. To reduce gain, it is recommended to adjust the attenuators in the BIU UL path. This will further reduce UL noise.
    b. To increase gain, it is recommended to adjust the gain in the RU UL path.

    Note: *Do not drive the FOR UL laser with more than 0dBm RF input. Recommended FOR UL input level is approximately -5dBm.*

    c. The BIU UL input will be permanently damaged with signals stronger than +13dBm.
7. Record UL test tone level received in the spectrum analyzer. After all remote units on the sector have UL levels set, the remotes will need to be balanced against each other (all are hitting the BTS UL at the same level). Levels should be within about 1dB of each other.

Downlink

1. Set all values at default (factor setting may vary due to individual testing before shipping)
    a. BIU: -15dB
    b. FOI: -3, -3
    c. FOR: +10
    d. Amp: To be set based on actual input
2. Suggestion: Set FOR DL ALC level to one dB less than amp rating if unit alarms on DL.
    a. A 43dB amplifier would have an ALC level set to +42.
3. Set BIU DL level to compensate for ICU interconnection loss. Do not exceed +10dB output of the BIU in the DL path (will cause IM).
    a. Suggest setting at maximum of +5dB output of the BUI.
    b. Note there is 13 dB of inherent loss in the BIU. With 0dB settings in the BIU DL attenuators a 30dB input signal will have an output of +17dB (30dB input minus 13dB inherent loss = 17dB). Adjust attenuators so that BIU is approximately +5dB as a start.
    c. Variations in the BTS input levels for loading must be taking into consideration. Full load and no load power levels differ greatly. Do not allow the BTS to overdrive the BIU.
4. Adjust FOI attenuator levels in the DL path so that the RF input into the DL laser is approximately -5dB.
    a. Note that the 0dB max into the laser is a composite level for all bands. By setting each band at -5dB then total composite should not exceed 0dB.
    b. Take into consideration that each BIU has two RF strips/paths. These must be taken into consideration when setting the FOI levels.
    c. Calculate full load conditions for all bands being fed into the FOI. Incorrectly setting the levels will impact the system during times of most usage.
5. Set the desired gain in the remote.

6. Apply RF signal to the BIU BTS port.
7. Check Remote Unit FOR status "Set Gain", "Gain" and "Output Power".
8. Adjust "Set Gain" so that desired output power is achieved.
    d. If "Gain" level is lower than "Set Gain" level in the status screen then the system is being over driven and ALC is limiting the gain of the system. Reduce gain setting to the level displayed in "Set Gain". Submit change and the review status screen. "Set Gain" and "Gain" levels should now be identical.

Bird VPN Access

Establishing secure VPN access for Bird/DeltaNode will allow for remote monitoring and advanced technical support. The BGW is designed to communicate directly with the Bird/DeltaNode NOC via cloud access.

VPN Settings

1. Connect laptop to an open port on the DAS switch. Do not connect to the Console port.
2. Log into the BGW at 172.22.0.1.
    Login Name: “extend”
    Password: “admin”
3. Click “Configuration,” see Figure 112.
4. Click “External Comm.”

Figure 112 Certificate Entry

5. Click “Certificate Handling.”
6. Click “Browse” next to upload Certificate for Secondary CGW.
    Only make setting changes to the Secondary CGW. The Primary CGW is reserved for customer CGW access.

7. Select the check box next to the 10##.crt file. See Figure 113.
8. Click"Insert"

Figure 113 Certificate Selection

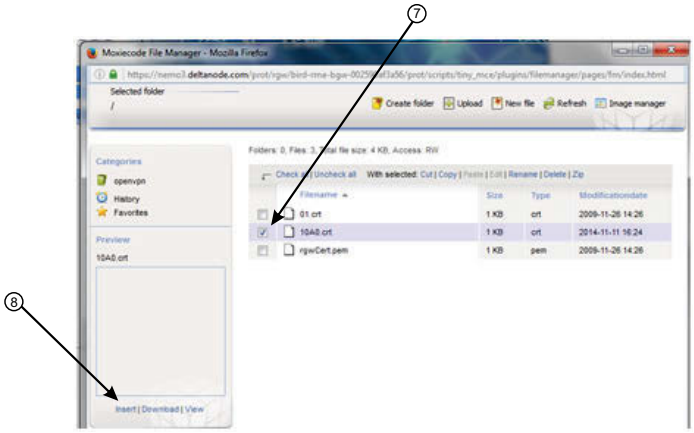

9. Select "Browse" for the File name for certificate key. SeeFigure 114.

Figure 114 Key Entry

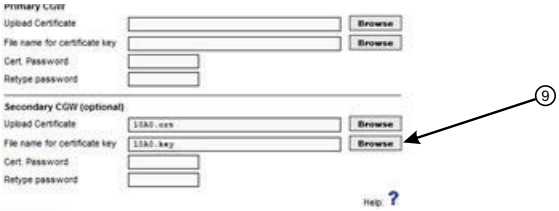

10. Select the check box next to the "10##.key" file. See Figure 115.
11. Select "Insert"

Figure 115 Key Selection

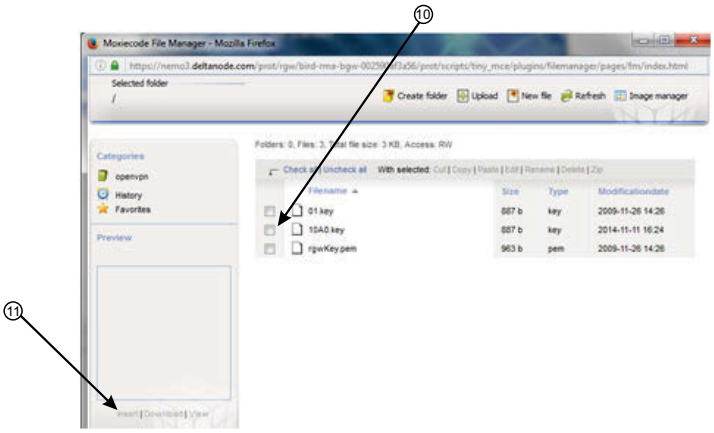

12. Select Ext. Ethernet Tab
13. Select the check box for “Use eth0 for Internet (WAN).”
    This ensures external Ethernet connections are allowed.

Figure 116 External Ethernet

14. Select DNS Forwarders tab.
15. Select radio button for “Dynamic, assigned by eth0.”

Note: *The Bird maintained CGW is not able to hostname check a DNS2 IP address of 8.8.2.2, 4.2.2.4 or 4.2.25. Please change to something like Google's 8.8.4.4 or 8.8.8.8*

Figure 117 DNS Forwarders

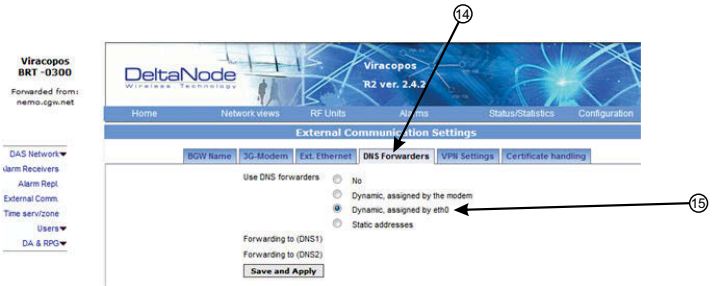

16. Select VPN Settings tab to verify that the VPN settings are correctly set.
17. Select check box “Log VPN Connections”
18. Type “nemo3.deltanode.com” into the Secondary CGW setting for FQON or IP address.
19. Select check box “Activate a VPN service tunnel.” This selection is only on available on older software versions.

Figure 118 VPN Settings

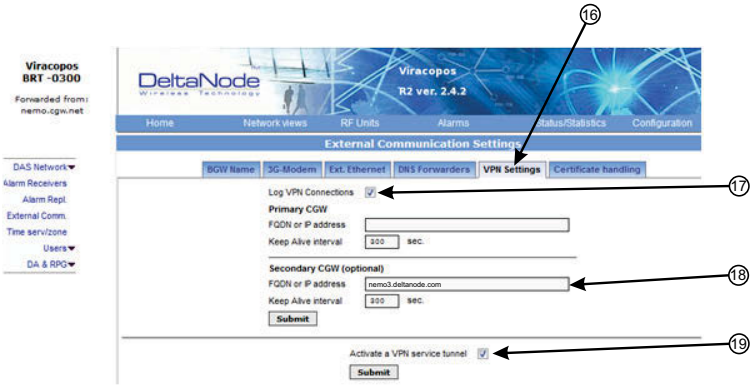

20. Click on “Status/Statistics.”
21. Select the “Communication Control” tab.
22. Select the check box next to “VPN Restart.”
23. Click “Restart.”

Figure 119 VPN Restart

24. After about 10 minutes, the BGW should start communicating with the Bird/DeltaNode CGW.
25. Click on Status/Statistics
26. Select the Ethernet Status tab.
    Both "eth0" and "eth1" should show connectivity. Figure 120 shows good communications in "eth0" between the BGW and a 3G modem. "eth1" shows good communications between the 3G modem and the Bird/DeltaNode CGW.

Figure 120 Ethernet Status

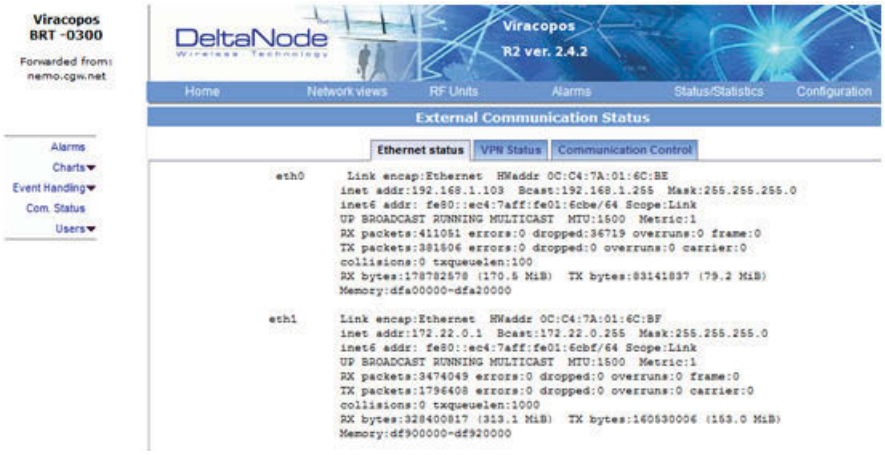

Wireless Modem Setup

Due to variances with different wireless modem manufacturers, settings may vary from modem to modem. A general understanding of network settings is required. Below are a few typical settings that will need to be configured.

Modem DHCP

DHCP will need to be enabled so that the wireless modem can assign an IP address to the BGW. Be sure to enter the stop and end IP address as seen in the image.

Figure 121 Modem DHCP Configuration

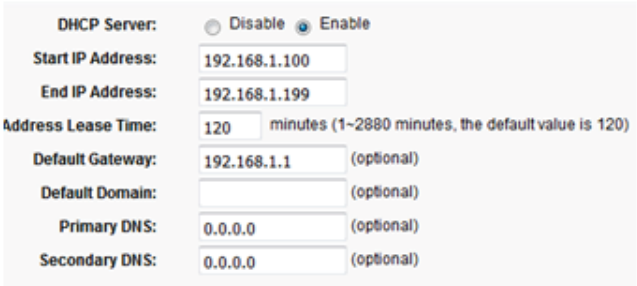

Modem VPN Tunnels

The BGW communicates back to the CGW via a VPN tunnel. The wireless modem must enable VPN pass through.

Figure 122 Modem VPN Settings

Modem Port Forwarding

Set up the modem so that it forwards TCP port 443.

BGW Configuration

1. Connect IP modem to the External WAN port on the BGW.
2. Click Configuration. See Figure 123.
3. Click External Comm.
4. Select 3G-Modem tab.
5. Select the “Use 3G Modem” check box.

Figure 123 BGW Configuration - 3G Modem Setup

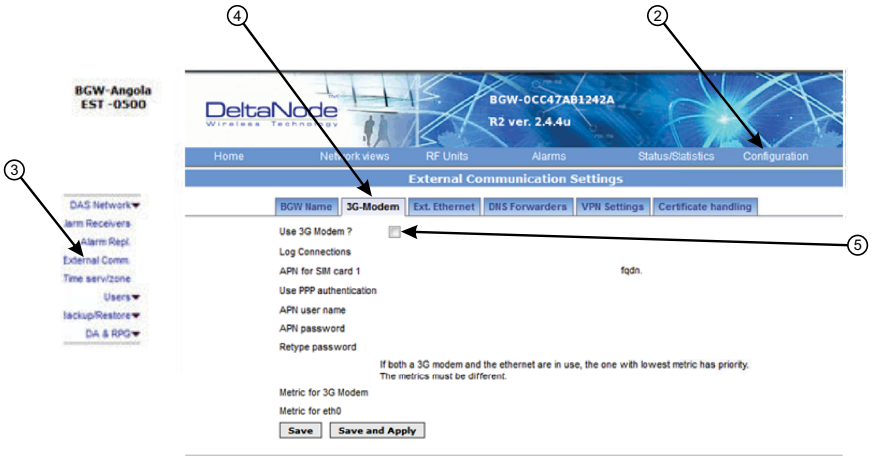

6. Select the VPN Settings tab.
7. Select the “Activate a VPN service tunnel” check box, if not already selected.

Note: *Older software versions of the BGW do not offer VPN service tunnels. Contact Bird to order a replacement BGW.*

Figure 124 BGW Configuration - VPN Setting

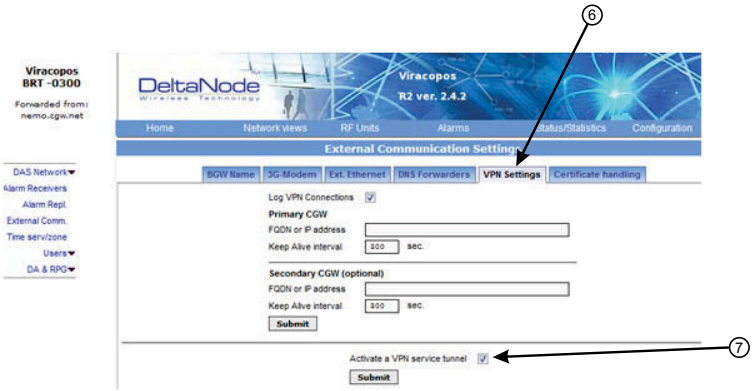

8. Select the DNS Forwarders tab. See Figure 125 on page 104.
9. Select either:
   - "Dynamic, assigned by eth0" or
   - "Static addresses". Enter 8.8.8.8 in the Forwarding to (DNS1).

Figure 125 BGW Configuration - DNS Forwarders Setting

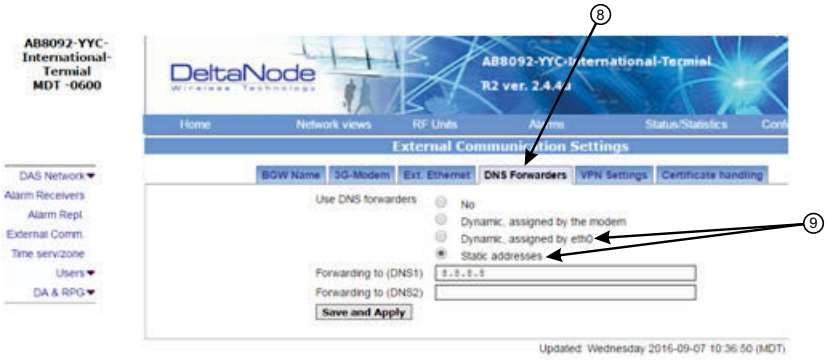

10. Select the Ext. Ethernet tab
11. Select "Use eth0 for internet" and "Static IP address" check boxes.
12. Record the existing IP setting in case rolling back to original settings is required.
13. Enter the IP addresses information:

    IP Address: 192.168.0.10

    Netmask: 255.255.255.0

    Gateway IP Address: 192.168.0.1

Figure 126 BGW Configuration - External Ethernet Setting

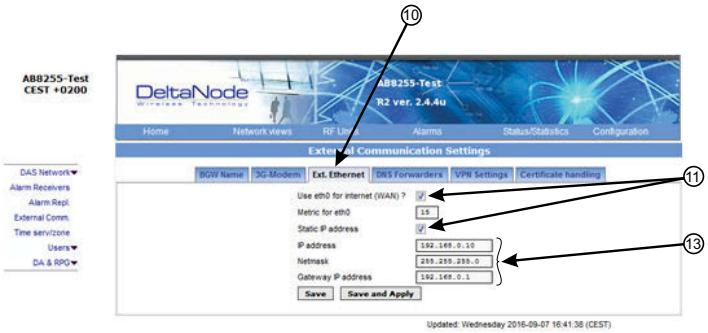

14. After all the setting have been configured, power cycle the wireless modem.
15. Click on "Status/Statistics." See Figure 127 on page 105.
16. Select the "Ethernet Status" tab.
    Verifiy that "etho" has been assigned a valid IP address.

Figure 127 BGW Configuration - Ethernet Status

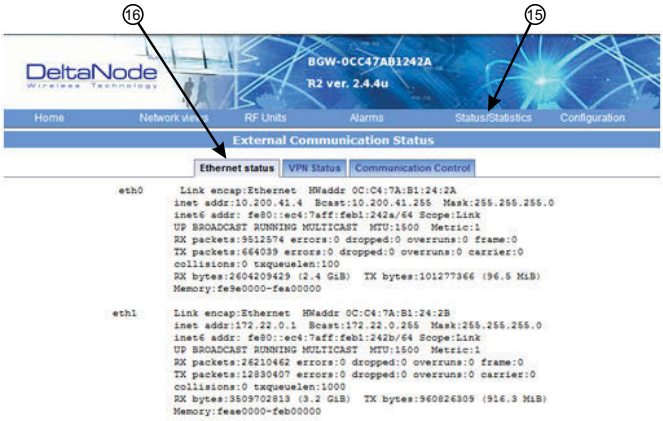

Rolling Back Modem Configuration

If the external modem is no longer required the configuration can quickly be rolled back.

1. Click on Configuration. See Figure 128.
2. Click on External Comm.
3. Select the Ext Ethernet tab.
4. Enter original IP addresses that used prior to installing the modem.

Figure 128 Rollback Modem IP Addresses

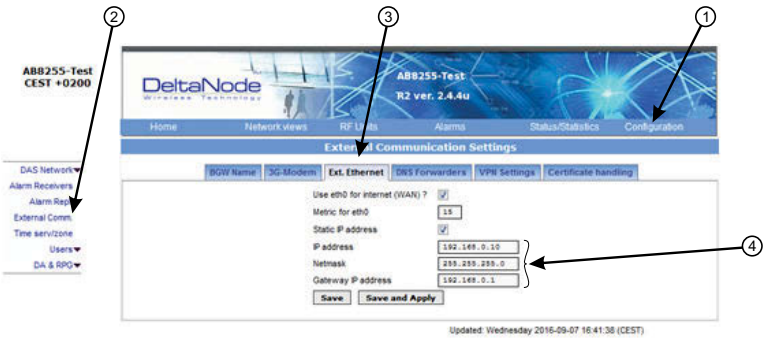

5. Select the DNS Forwarders tab. See Figure 129 on page 105.
6. Select the "No" radio button.

Figure 129 Stop DNS Forwarding

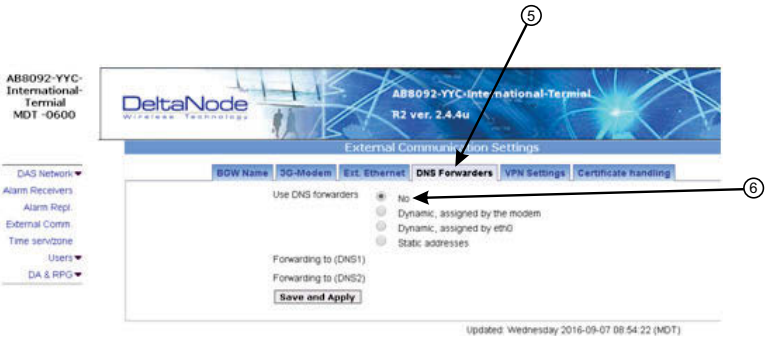

Setup local Network UDP Ports for CGW Access

In order for the Bird/DeltaNode CGW to be able to make contact with the BGW ensure that the customer IT department has OpenVPN with UPD ports 1194 to 1199. This allows Bird/DeltaNode static IP address to access the BGW.

Local Connection to Remote Unit

A technician can directly connect a laptop to the remote unit. This is useful when the technician is at the remote unit troubleshooting. The direct connection is also very useful when there is no fiber connectivity to the remote unit and the installer needs to test and program the remote unit during the installation process.

> **Note:** *By directly logging in the remote unit and programming the name of the remote there is less chance of confusion when all the remotes are connecting to the Master Unit.*

1. Set laptop to a static IP address; something along the lines of
   - IP address 169.254.48.11
   - Subnet Mask 255.255.0.0
   - Gateway 169.254.0.1
2. Connect RJ45 Ethernet cable to the laptop and the Ethernet port on the remote.

Figure 130 Remote Unit Ethernet Port

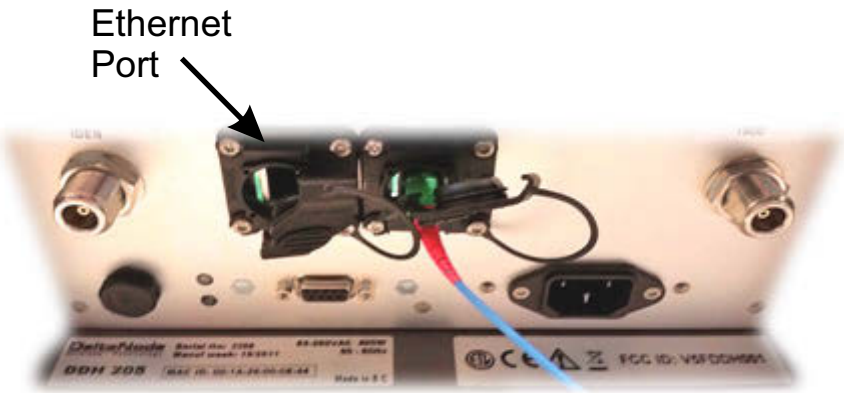

3. Use any web browser to connect to the remote unit starting with http://169.254.48.1.
   The remote unit has a default IP address of 169.254.48.1 to .10. If the login menu does not appear try the next sequential IP address (http://169.254.48.2). Continue trying the next IP address until the login menu appears.

Figure 131 Remote Unit Login Screen

4. When the login menu appears type in the default credentials:
   - Username: “extended”
   - Password: “admin”
5. The GUI menus will be the same as when connecting to the remote through the BGW.

Local Connection to Remote Unit with Two FOR's

Some remote units are built with 2 FOR boards. This would occur in applications where one chassis contains: MIMO paths, multiple amplifiers of the same band, amplifiers fed from different FOI cards or other special applications. The 2 FOR boards share the one Ethernet connector on the remote unit. A standard Ethernet cable will only access FOR [0]. A custom cable is required to access FOR [1] board.

To build a cable to access both FOR units you will need the following items.

- Wire cutters
- Wire strippers
- Electrical tape
- Two Ethernet cables with RJ-45 Connectors

Build a Custom Cable

1. Cut both Ethernet cables in half.

   Three sections will be needed.
2. Strip back the insulation on each wire about 0.5 inch/13mm.
3. Twist the color pairs together as shown in Figure 132 on page 108.
4. Use electrical tape to cover the connections so bare wire do not touch.

   Unused cable strands can be cut.
5. Secure the splice with electrical tape so that stress does not pull the wire pairs apart.
6. Clearly mark each connector to distinguish which connector is attached to the remote and which connector plugs into the laptop for FOR [0] and FOR [1].

Figure 132 Custom Cable for Connecting to two FOR systems

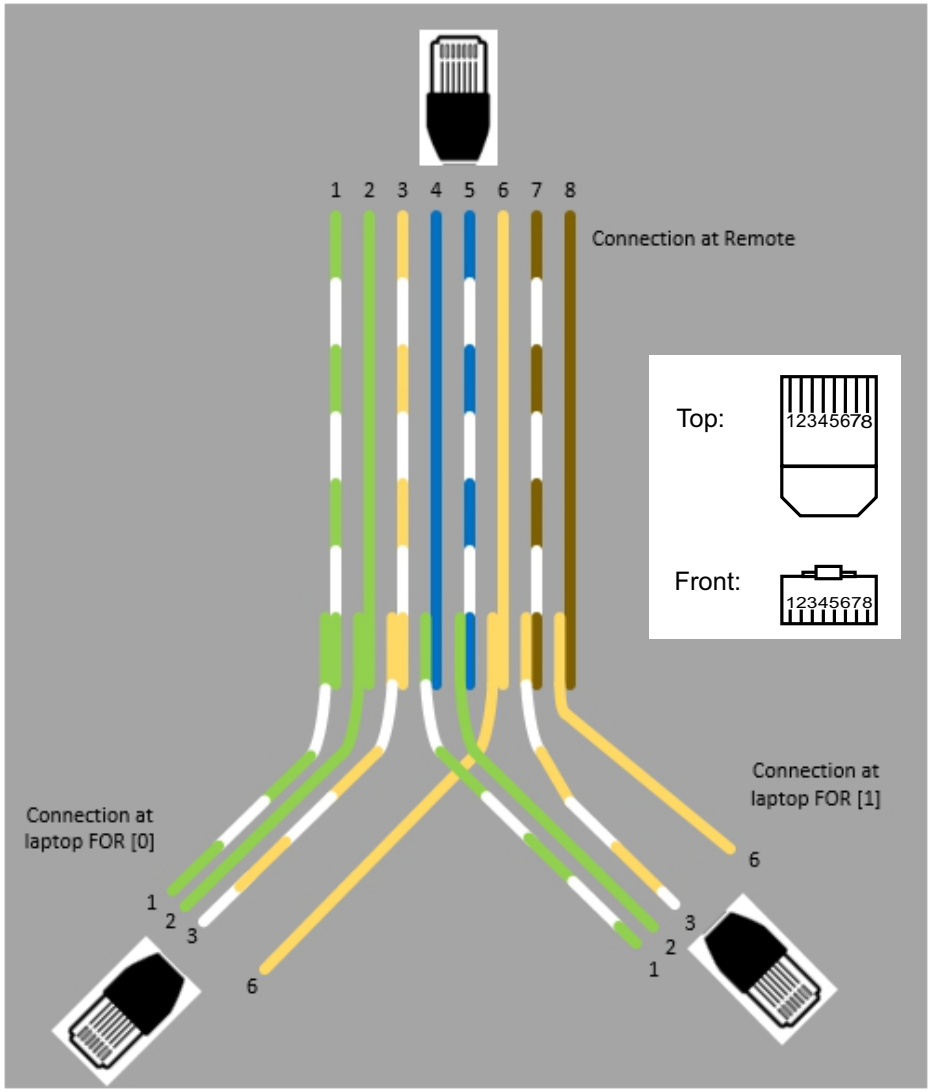

Connection to BGW from Remote Unit

The technician has the ability to connect to the BGW from the remote unit. This eases troubleshooting and programming by not having to return to the BGW location for direct access.

1. Enable the laptop DHCP settings.
2. Connect RJ45 Ethernet cable to the Ethernet port on the remote.

   The FOI will detect that a device has connected to the FOR and will assign an IP address to the the laptop in the range of 172.22.108.49-62.

   Note: *It may take up to 15 minutes for the FOI to assign an IP address to the laptop.*
3. Using an Internet browser connect to 172.22.0.1
4. When the login menu appears type in the default credentials:
   - Username: "extended"
   - Password: "admin".

In order to make the process more clear for this part of the manual we will consider setting up a fictitious system, but based on a standard approach at doing Fiber-DAS. The system that we are considering will have two frequency bands, let's assume GSM 900 MHz and UMTS 2100 MHz. The example will have 2 sectors with two remotes in each sector. Of course your system may look different, be more or less complex but in order to make it clear how the system is set up this should provide you with a starting point.

Setting up the uplink

Setting up the uplink means to adjust the system for an optimal working point from the antenna port of the Remote Unit to the actual input on the Radio Base Station. This can be done in different ways depending on how the system is designed. We will here discuss a standard set-up starting with a small block schematic showing how the system is connected.

Figure 133 System Interconnect Diagram

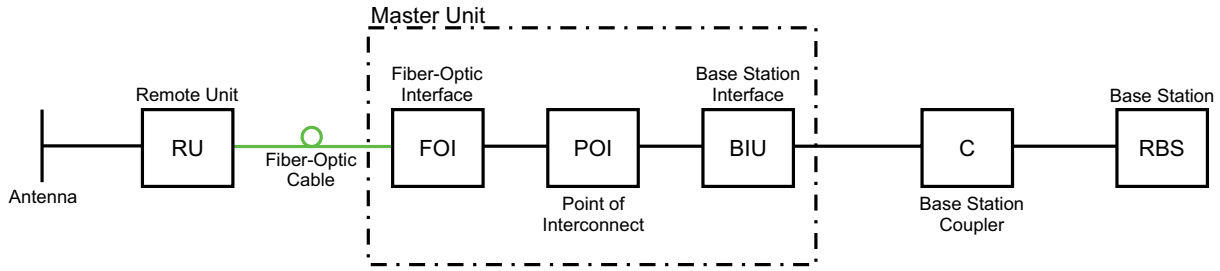

The main parameter that we will be discussing is the "net gain" of the system. This means the total change in signal from the Remote Unit antenna port to the receiver port on the base station. There are different ways of setting this system up but we will look at a 0 dB net gain system which is a good starting point for most systems.

The system gain can be calculated as the gain in the Remote Unit – Loss on fiber + FOI gain – ICU loss + BIU gain – coupler loss. Basically this takes form of a link budget and here is an example:

Table 68 Example Link Budget

Unit/Component	Gain/Loss (dB)	Accumulated Gain/Loss (dB)
Remote Unit (RU)	40	40
Fiber-Optic Cable	-10	30
FOI	20	50
ICU	-35	15
BIU	0	15
Coupler	-15	0

Basically this means that whatever is input at the antenna will also be seen at the same level for the Radio Base Station receiver. This is not a bad starting point but does not take into account the noise load on the base station which will increase somewhat with this setup.

Noise load on Radio Base Station

The system will inevitably add some noise to the receiver. When properly set up the noise figure in a system like this will be better than 3 dB. However, if the gain is improperly set up (i.e. not enough gain in the remote, too much gain in the head-end) it is possible to create a very bad noise figure. In order to avoid this the Fiber-DAS Calculator should be used to calculate the noise figure of the system in the uplink.

If you have not familiarized yourself with the Fiber-DAS Calculator, do so before moving on in this manual. The figures in the Fiber-DAS calculator relate to the settings of all steps in the chain. By using the calculator, you can determine the proper settings once you know the fiber loss between the Remote Unit and the headend.

Let us assume your have arrived at a Noise Figure (NF) of 3 dB for this chain. However your system may contain more remotes, perhaps connected like the system in Figure 134.

Figure 134 Multiple RU Connection Diagram

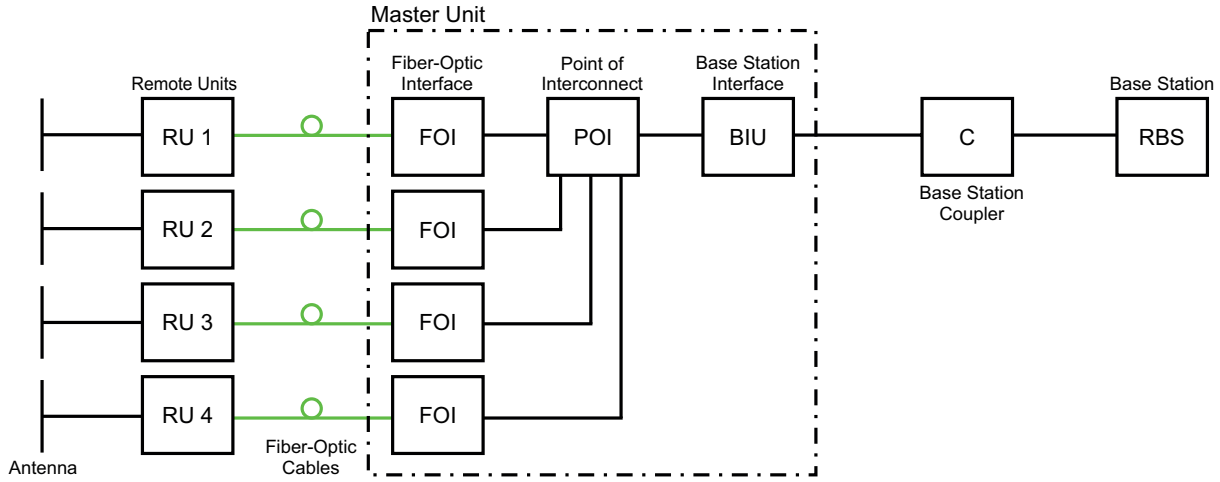

Now the noise load can be calculated by adding the noise contribution from each step of the chain. Below is an example of noise figures from each of the remotes:

Table 69 Noise Load

Chain	NF	Gain	Noise Load
RU 1	2.8	0.0	2.8
RU 2	3.2	1.0	4.2
RU 3	3.8	-2.0	1.8
RU 4	2.6	-1.0	1.6
Sum of Noise Load			8.7

Base Station	4.0
Fiber-DAS Noise Load	8.0
Total Noise into BTS	9.5
Desensitization	-5.5

Add your figures to the sheet in the Fiber-DAS calculator and it will calculate it for you.

What we see here is that if we set the system up in this fashion we will desensitize the base station with about 5,5 dB. This can be okay if the base station coverage is only through the Fiber-DAS system but if the base station is also being used for outdoor coverage it is not good. We need to change the net gain to reflect this. In general we should lower the gain so that we desensitize the BTS only about 3 dB. This value is a good compromise and similar to adding a second antenna to the same receiver port (which is kind of what we are doing with the Fiber-DAS).

Here are the new values:

Table 70 Adjusted Noise Load

Chain	NF	Gain	Noise Load
RU 1	2.8	-5.5	-2.2
RU 2	3.2	-5.5	-1.8
RU 3	3.8	-5.5	-1.2
RU 4	2.6	-5.5	-2.4
Sum of Noise Load			4.1

Base Station	4.0
Fiber-DAS Noise Load	4.1
Total Noise into BTS	7.1
Desensitization	-3.1

As you can see we should set the system up with a net gain of about -5 dB. Going back to the settings we had before which was:

Table 71 Example Link Budget

Unit/Component	Gain/Loss (dB)	Accumulated Gain/Loss (dB)
Remote Unit (RU)	40	40
Fiber-Optic Cable	-10	30
FOI	20	50
ICU	-35	15
BIU	0	15
Coupler	-15	0

We only need to change the BIU setting using the attenuators in the BIU to lower the gain with 5 dB. This will accomplish what we need to do and the uplink should then be commissioned.

Practical approach

Now that we know what we should have we can easily set the system up. You need a spectrum analyzer to do this and it is easiest to connect it into the BIU port. Remember that when you measure here, the signal should also go through the BTS coupler before it reaches the base station receiver port. Therefore you should expect to read a value that is

Your expected gain + the loss in your coupler

If you want a net gain of -5 dB and you have a 15 dB coupler, you should read a net gain of +10 on the BIU port. This is now what we are going to use in the following example.

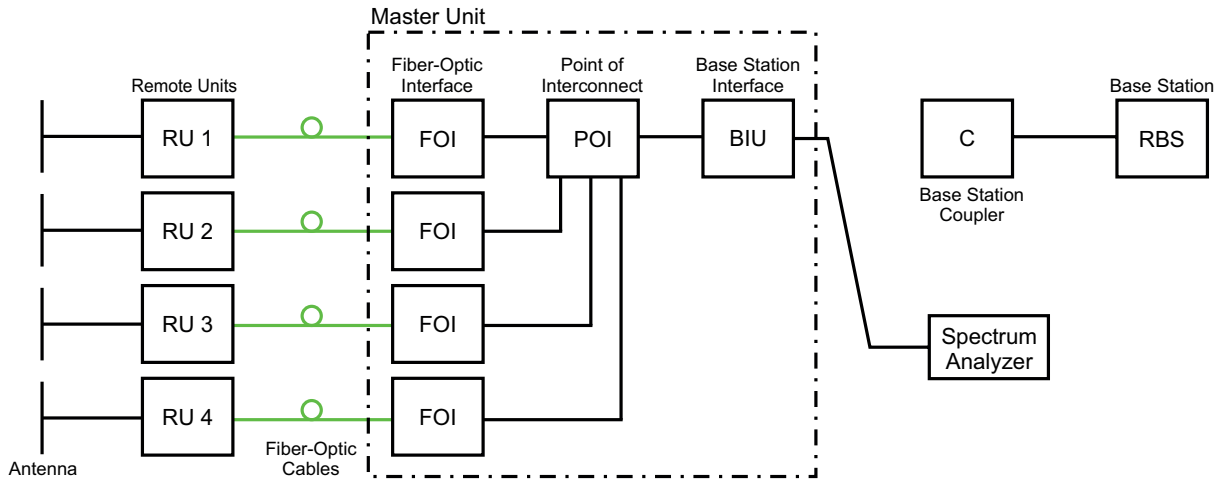

Turn on the RF

Connect to the BIU and turn on the RF. Set the attenuator in the medium range for the uplink that you are measuring. This allows you later to adjust it up and down as necessary to get the correct gain for the uplink chain.

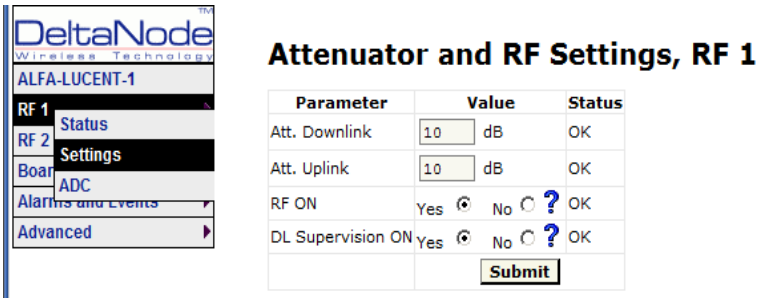

Setting them to 10 dB is a good idea. DL supervision can be left as is for now and also DL attenuation which we will set up later.

Connect to the FOI card and select Opto and RF – RF Config and set it up according to your Fiber-DAS calculator settings. Do not forget to turn RF on.

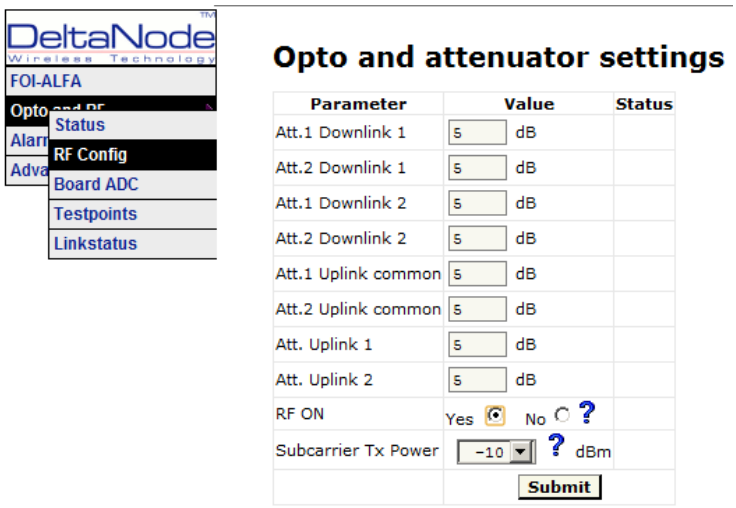

Next step is to connect to the remote unit and set it up for test measurement in the uplink.

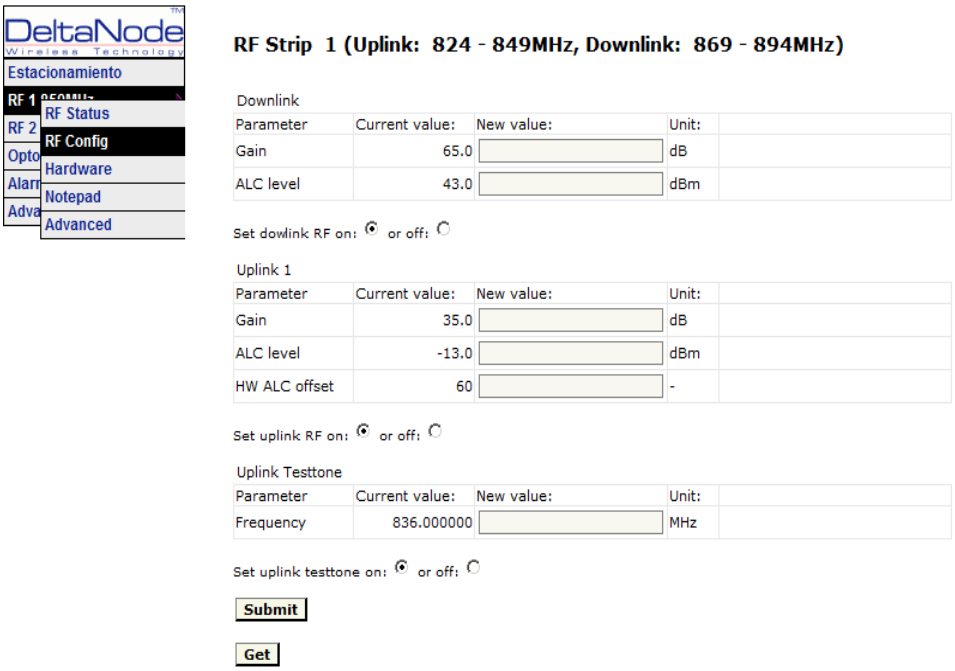

In this screen you should also turn RF on, set the gain to about 35 dB as a starting point and then turn on the uplink test tone. Note the frequency of the test tone, this is the frequency you should be measuring on your spectrum analyzer.

Turn on the spectrum analyzer, make sure it is connected to the right port on the right BIU and then find the frequency. A reasonable span is 1 MHz and the receiver band width can be set to 30 kHz or similar. Use the marker to measure the peak of the signal. Then go to the next screen on the remote unit, the RF Status screen.

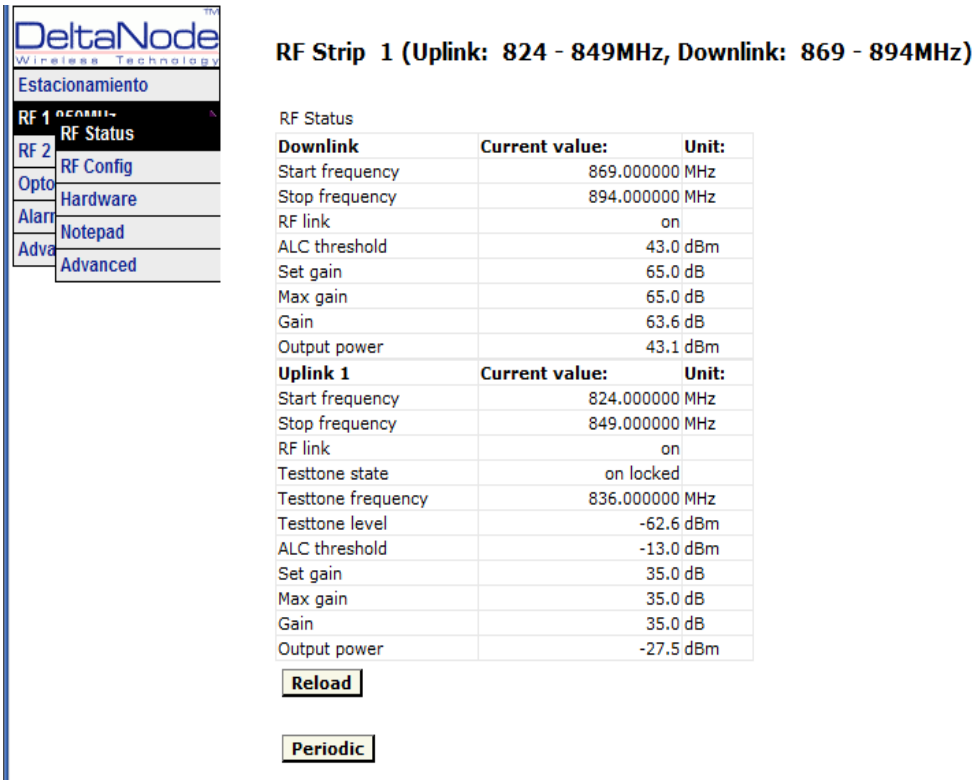

Downlink	Current value:	Unit:
Start frequency	869.000000	MHz
Stop frequency	894.000000	MHz
RF link	on	
ALC threshold	43.0	dBm
Set gain	65.0	dB
Max gain	65.0	dB
Gain	63.6	dB
Output power	43.1	dBm
Uplink 1	**Current value:**	**Unit:**
Start frequency	824.000000	MHz
Stop frequency	849.000000	MHz
RF link	on	
Testtone state	on locked	
Testtone frequency	836.000000	MHz
Testtone level	-62.6	dBm
ALC threshold	-13.0	dBm
Set gain	35.0	dB
Max gain	35.0	dB
Gain	35.0	dB
Output power	-27.5	dBm

What we are looking for here is the Test tone Level. Note this down as well, next to the frequency of the test tone you noted earlier.

CAUTION
Turn Off Test Tone
Do not forget to turn off the test tone when you are done with your uplink. Better check one extra time. They will otherwise interfere with the normal operation of the system by causing noise to the base station.

Then check your spectrum analyzer. Assuming your test tone level is -62,6 dBm as in this example your spectrum analyzer may show -58,2 dBm. Calculating the net gain between the RU and the BIU will then yield -58,2 - -62,5 = 4,3 dB. Subtract the coupler between the BIU and the radio base station which in this example was 15 dB and we get -19,3 dB as our net gain.

We wanted -10 dB so we have 9,3 dB too low gain. We should then increase the gain and the best place to do this would be in the remote unit by setting the gain at 35 + 9,3 = 44,3 which we will round to 44 dB.

That uplink is now finished and we will repeat the settings for all of our uplink, one at a time.

System Model Numbers

Product Family	Sub-family	Number of Bands		Frequency	Duplexed	Frequency	Duplexed		Frequency	Duplexed	Frequency	Duplexed		Voltage	Connectors	WDM		Wavelength FOR 1	FOR 1 Band 1	FOR 1 Band 2		Wavelength FOR 2	FOR 2 Band 1	Wavelength FOR 3	FOR 3 Band 1		CWDM				Optical Split
D	D	R	4	-	G	0	C	0	-	G	0	C	0	-	A	D	W	-	B	1	2	-	C	3	H	3	-	W	U	B	C	S

Family:
DDU - 46 dBm Full Band
DDH - 43 dBm Full Band
DDS - 41 dBm Single Carrier
DDR - 33 dBm Full Band
DDL - 23 dBm Full Band
DDX - Mixed Power Levels

Number of Bands:
1
2
3
4

Frequency:
R - FM Radio
V - VHF (136-174)
T - Tetra (380-400)
M - Gov (406-420)
B - Tetra (410-415/420-425)
O - Tetra (415-420/425-430)
X - CDMA450 (453-457.5/463-467.5)
U - UHF (450-470)
Q - 500MHz T-Band (470-512)
L - Lower 700
H - Higher 700
G - 700 Full Band
F - PS 700 (793-805) FirstNet & NB
S - 800 SMR
J - DD 800
C - Cell 850
N - 900 PS
Y - GSMR
Z - EGSM900
D - DCS (1800)
P - PCS
I - UMTS (1900/2100)
A - AWS (1700/2100)
K - AWS & AWS3
E - IMT-E (2600)

Duplexed or DDX Pwr Lvl:
0 - Non-duplexed
1 - Duplexed
For DDX use:
For DDX Pwr Lvl 0 - 9:
0 - Non-duplexed (DDU)
1 - Duplexed (DDU)
2 - Non-duplexed (DDL)
3 - Duplexed (DDL)
4 - Non-Duplexed (DDH)
5 - Duplexed (DDH)
6 - Non-duplexed (DDS)
7 - Duplexed (DDS)
8 - Non-duplexed (DDR)
9 - Duplexed (DDR)

Voltage:
A - Universal AC (86-264 AC/DC)
D - 48 VDC

Connectors:
N - N-type Connectors
D - 7/16 DIN
M - Mini DIN

WDM:
W - Duplexed (UL and DL on the same fiber)

Wavelength of Uplink:
(FOR2 and FOR3 are optional to support multiple fiber links)
A - 1270
B - 1290
C - 1310 (default C if omitted)
D - 1330
E - 1350
F - 1370
G - 1390
H - 1410
I - 1430
J - 1450
K - 1470
L - 1490
M - 1510
N - 1530
O - 1550
P - 1570

FOR Bands:
(if omitted than all bands on one FOR)
Bands for that fiber link (in order as appear in model #) i.e. C123 would be standard FOI driving bands 1, 2, and 3
1
2
3
4

CWDM (option):
WUxxxx - combine multiple uplink fiber interfaces onto one fiber - each x denotes a wavelength (absence of xxxx implies all UL wavelengths)
WDxxxx - split to multiple downlink fiber interfaces from one fiber - each x denotes a wavelength (absence of xxxx implies all DL wavelengths)

Optical Split (option):
Sx - split the fiber at entry - to daisy chain other remotes - x is dB split (3dB equal split if absent)

Examples:

DDR4-GC0-PA1-AD — 4 band, 33dBm power output per band, Full band 700 combined with Cell 850 non duplexed, PCS combined with AWS duplexed, AC powered, 7/16 DIN, 1310nm uplink

DDR4-GC0-PA1-AD-B12-C34-WUBCS — 4 band, 33dBm power output per band, Full band 700 combined with Cell 850 non duplexed, PCS combined with AWS duplexed, AC powered, 7/16 DIN, Bands 1 and 2 (700 and 850) 1290nm uplink, Bands 2 and 3 (PCS & AWS) 1310nm uplink, CWDM, fiber split (3dB) for daisy chained remotes

Remote End Unit Part Numbers

Note: *The remote end units are completely integrated at the factory, there is no field assembly other than mounting and cable connection. Modules should not be altered once deployed.*

Public Safety DDR Module Numbers

Part Number	Frequency Band	IC Certification Number
MOD-DDR-V	VHF - 136-174MHz	110141A-DDR1V
MOD-DDR-U	UHF - 450-470MHz	110141A-DDR1U
MOD-DDR-Q	T-Band - 470-512MHz	110141A-DDR1Q
MOD-DDR-F	700Mhz PS	110141A-DDR1F
MOD-DDR-S	800MHz PS	110141A-DDR1S

Cellular DDR Module Numbers

Part Number	Frequency Band	IC Certification Number
MOD-DDR-G	700 cell full band	110141A-DDR700FB
MOD-DDR-C	850 cell band	110141A-DDR850
MOD-DDR-P	1900 PCS	110141A-DDR1900
MOD-DDR-A	2100AWS	110141A-DDR2100
MOD-DDR-E	2600	110141A-DDR2600