# Fiber Distributed Antenna System
# (Fiber DAS)

## Operation Manual

©Copyright 2017 by Bird Technologies, Inc.
Instruction Book Part Number 920-Fiber-DAS Rev. P4

Delta Node® is a registered trademark of Delta Node Solutions Ltd. and Bird Technologies, Inc.

## Safety Precautions

The following are general safety precautions that are not necessarily related to any specific part or procedure, and do not necessarily appear elsewhere in this publication. These precautions must be thoroughly understood and apply to all phases of operation and maintenance.

**WARNING**
**Keep Away From Live Circuits**
Operating Personnel must at all times observe general safety precautions. Do not replace components or make adjustments to the inside of the test equipment with the high voltage supply turned on. To avoid casualties, always remove power.

**WARNING**
**Shock Hazard**
Do not attempt to remove the RF transmission line while RF power is present.

**WARNING**
**Do Not Service Or Adjust Alone**
Under no circumstances should any person reach into an enclosure for the purpose of service or adjustment of equipment except in the presence of someone who is capable of rendering aid.

**WARNING**
**Safety Earth Ground**
An uninterruptible earth safety ground must be supplied from the main power source to test instruments. Grounding one conductor of a two conductor power cable is not sufficient protection. Serious injury or death can occur if this grounding is not properly supplied.

**WARNING**
**Resuscitation**
Personnel working with or near high voltages should be familiar with modern methods of resuscitation.

**WARNING**
**Remove Power**
Observe general safety precautions. Do not open the instrument with the power applied.

## Safety Symbols

**WARNING**
Warning notes call attention to a procedure, which if not correctly performed, could result in personal injury.

**CAUTION**
Caution notes call attention to a procedure, which if not correctly performed, could result in damage to the instrument.

**Note:** *Calls attention to supplemental information.*

**The laser used in this system is a Class 3b laser that produces invisible infra-red coherent light. Avoid looking into connected fibers and receptacles. Not safe to view with optical instruments. Always put the protection caps on unused fibers and receptacles.**

## Warning Statements

The following safety warnings appear in the text where there is danger to operating and maintenance personnel and are repeated here for emphasis.

**WARNING**
This is NOT a consumer device.
It is design for installation by **FCC LICENSEES** and **QUALIFIED INSTALLERS.** You **MUST** have an **FCC LICENSE** or express consent of an FCC licensee to operate this device. You MUST register Class B signal boosters (as defined in 47 CFR 90.219) online at www.fcc.gov/signal-boosters/registration. Unauthorized use may result in significant forfeiture penalties, including penalties in excess of $100,000 for each continuing violation.

See page 42

For CMRS 817-824MHz Applications and American Cellular Applications:

**WARNING**
This is NOT a consumer device.
It is design for installation by **FCC LICENSEES** and **QUALIFIED INSTALLERS.** You **MUST** have an **FCC LICENSE** or express consent of an FCC licensee to operate this device. Unauthorized use may result in significant forfeiture penalties, including penalties in excess of $100,000 for each continuing violation.

See page 42

**WARNING**
This is NOT a consumer device.
It is designed for installation by an installer approved by an ISED licensee.
You MUST have an ISED LICENCE or the express consent of an ISED licensee to operate this device.

See page 42

**WARNING**
Avoid looking into connected fibers and receptacles.
The laser used in this system is a Class 3b laser that produces invisible infra-red coherent light. Not safe to view with optical instruments. Always put the protection caps on unused fibers and receptacles.

See page 15

## Caution Statements

The following equipment cautions appear in the text and are repeated here for emphasis.

**CAUTION**
**Turn Off Test Tone**
Do not forget to turn off the test tone when you are done with your uplink. Better check one extra time. They will otherwise interfere with the normal operation of the system by causing noise to the base station.

See page 116

**CAUTION**
Unauthorized antennas, cables, and/or coupling devices may cause non-conformity with national or international regulations, could cause damage, or non-conforming ERP/EIRP.

See page 43.

**CAUTION**
When mating RF connectors, ensure that they are properly aligned and not cross threaded.
Tighten SMA connectors to 8 in.-lbs.
Do over torque RF connectors, this could result in damage to the Unit.
Do not under torque RF connectors, this could result in poor signal transmission.

See page 49

## Safety Statements

**USAGE**

ANY USE OF THIS INSTRUMENT IN A MANNER NOT SPECIFIED BY THE MANUFACTURER MAY IMPAIR THE INSTRUMENT'S SAFETY PROTECTION.

**USO**

EL USO DE ESTE INSTRUMENTO DE MANERA NO ESPECIFICADA POR EL FABRICANTE, PUEDE ANULAR LA PROTECCIÓN DE SEGURIDAD DEL INSTRUMENTO.

**BENUTZUNG**

WIRD DAS GERÄT AUF ANDERE WEISE VERWENDET ALS VOM HERSTELLER BESCHRIEBEN, KANN DIE GERÄTESICHERHEIT BEEINTRÄCHTIGT WERDEN.

**UTILISATION**

TOUTE UTILISATION DE CET INSTRUMENT QUI N'EST PAS EXPLICITEMENT PRÉVUE PAR LE FABRICANT PEUT ENDOMMAGER LE DISPOSITIF DE PROTECTION DE L'INSTRUMENT.

**IMPIEGO**

QUALORA QUESTO STRUMENTO VENISSE UTILIZZATO IN MODO DIVERSO DA COME SPECIFICATO DAL PRODUTTORE LA PROZIONE DI SICUREZZA POTREBBE VENIRNE COMPROMESSA.

**SERVICE**

SERVICING INSTRUCTIONS ARE FOR USE BY SERVICE - TRAINED PERSONNEL ONLY. TO AVOID DANGEROUS ELECTRIC SHOCK, DO NOT PERFORM ANY SERVICING UNLESS QUALIFIED TO DO SO.

**SERVICIO**

LAS INSTRUCCIONES DE SERVICIO SON PARA USO EXCLUSIVO DEL PERSONAL DE SERVICIO CAPACITADO. PARA EVITAR EL PELIGRO DE DESCARGAS ELÉCTRICAS, NO REALICE NINGÚN SERVICIO A MENOS QUE ESTÉ CAPACITADO PARA HACERIO.

**WARTUNG**

ANWEISUNGEN FÜR DIE WARTUNG DES GERÄTES GELTEN NUR FÜR GESCHULTES FACHPERSONAL.

ZUR VERMEIDUNG GEFÄHRLICHE, ELEKTRISCHE SCHOCKS, SIND WARTUNGSARBEITEN AUSSCHLIEßLICH VON QUALIFIZIERTEM SERVICEPERSONAL DURCHZUFÜHREN.

**ENTRENTIEN**

L’EMPLOI DES INSTRUCTIONS D’ENTRETIEN DOIT ÊTRE RÉSERVÉ AU PERSONNEL FORMÉ AUX OPÉRATIONS D’ENTRETIEN. POUR PRÉVENIR UN CHOC ÉLECTRIQUE DANGEREUX, NE PAS EFFECTUER D’ENTRETIEN SI L’ON N’A PAS ÉTÉ QUALIFIÉ POUR CE FAIRE.

**ASSISTENZA TECNICA**

LE ISTRUZIONI RELATIVE ALL’ASSISTENZA SONO PREVISTE ESCLUSIVAMENTE PER IL PERSONALE OPPORTUNAMENTE ADDESTRATO. PER EVITARE PERICOLOSE SCOSSE ELETTRICHE NON EFFETTUARRE ALCUNA RIPARAZIONE A MENO CHE QUALIFICATI A FARLA.

## About This Manual

This manual covers the operating & maintenance instructions for the following models:

Fiber-DAS

## Changes to this Manual

We have made every effort to ensure this manual is accurate. If you discover any errors, or if you have suggestions for improving this manual, please send your comments to our Solon, Ohio factory. This manual may be periodically updated. When inquiring about updates to this manual refer to the part number: 920-Fiber-DAS; and revision: P4.

## Chapter Layout

**Introduction —** Describes the fundamentals of the Bird Fiber-DAS and provides a list of commonly used abbreviations and acronyms.

**System Description —** Describes the Major components that make up a Bird Fiber-DAS system.

**Installation Guidelines —** Provides FCC requirements and safety considerations when installing a Bird Fiber-DAS.

**Commissioning —** Lists the preparations and equipment required to successfully install and commission the Bird Fiber-DAS.

**RF Commissioning —** Contains useful advice on how to design a well working system as well as examples for fine tuning link a budget and controlling noise in a Bird Fiber-DAS.

**Model Identification —** Provides a breakdown of the Bird part numbers for the Fiber-DAS systems. A table of part numbers used for Remote Units is also provided.

# Table of Contents


Safety Symbols . . . ii
Warning Statements . . . iii
Caution Statements . . . iv
Safety Statements . . . v
Changes to this Manual . . . vii
Chapter Layout . . . vii

**Chapter 1 Introduction . . . 1**
RF on fiber . . . 1
Definitions . . . 2

**Chapter 2 System Description. . . . 4**
Gateways . . . 4
Central Gateway (CGW) . . . 4
Base Station Gateway (BGW) . . . 4
Remote Gateway (RGW) . . . 6
Headend . . . 6
DCS - Network Switch . . . 6
Master Frame Unit (MFU) . . . 7
Base Station Interface Unit (BIU) . . . 8
Interconnect Unit (ICU) . . . 13
Fiber Optic Interface (FOI) unit . . . 15
PSU – the rack power supply . . . 20
Remote Unit (RU) . . . 21
DDR . . . 22
DDS . . . 26
DDH . . . 28
DDU . . . 31
Remote Unit Frequency Summary . . . 33
DMU – Remote head end . . . 34
Repeaters . . . 35
DMR 400 Series Rack Mount Repeater . . . 35
DLR 600 Series Low Power Repeater . . . 37
DMR600 Series Medium Power Repeater . . . 38
DMR 800Series Medium Power Repeater . . . 39
DHR 800 Series High Power Repeater . . . 40
Bird Repeater Frequency Summary . . . 41

**Chapter 3 Installation guidelines . . . 42**
Health and Safety . . . 42
Cable Routing/Antenna Selection . . . 43
Antenna Installation . . . 43
Safety and Care for Fibers . . . 43
Tools and Material Requirements . . . 44
Fiber Optics . . . 44
Tools . . . 44
Miscellaneous Material . . . 44
Installing Headend Equipment . . . 45
BGW . . . 45
Ethernet Switch . . . 45

Master Unit . . . . . 46
Power Supply Unit . . . . . 47
BIU . . . . . 49
ICU . . . . . 50
FOI . . . . . 50
RFU . . . . . 51
Powering Up the Head End . . . . . 51
Installing Remote Units . . . . . 52
Single Remote Unit Wall Mounting . . . . . 52
Double Remote Unit Wall Mounting . . . . . 53
Remote Unit Pole Mounting . . . . . 53
Solar Shield . . . . . 54
Cabling . . . . . 54
Remote Unit Verification . . . . . 57
Installing the DHR Repeater . . . . . 58
Single Repeater Wall Mounting . . . . . 58
Double Repeater Wall Mounting . . . . . 59
Repeater Pole Mounting . . . . . 59
Solar Shield . . . . . 60
Cabling . . . . . 60

**Chapter 4 DAS Software Configuration . . . . . 64**

Ethernet Connection . . . . . 64
BGW Configuration . . . . . 65
BGW Naming . . . . . 65
EXT Ethernet . . . . . 65
VPN Settings . . . . . 66
Time Zone . . . . . 66
NTP Servers . . . . . 67
Email Server . . . . . 68
BIU Configuration . . . . . 69
BIU RF1 Status . . . . . 69
BIU RF1 Settings . . . . . 71
BIU Hardware Test Points . . . . . 72
BIU Alarm List . . . . . 72
BIU Change History . . . . . 73
BIU Alarm configuration RF1 . . . . . 73
BIU Advanced Network Setup . . . . . 74
BIU Advanced Menus . . . . . 74
BIU Application Handling . . . . . 75
BIU Reset to Factory Default . . . . . 75
FOI Configuration . . . . . 76
FOI Opto Status . . . . . 77
FOI Opto and Attenuator Settings . . . . . 79
FOI Fiber Network Subunits . . . . . 81
FOI Network Setup . . . . . 82
FOI Reset to Factory Default . . . . . 83
FOR . . . . . 83
RF Strip 1 XXX MHz Status . . . . . 84
RF Strip 1 XXX MHz Configuration . . . . . 85
FOR Opto Status . . . . . 87
FOR Opto Gain and Attenuation Settings . . . . . 89

FOR Fiber Network Settings . . . 90
FOR Application Handling . . . 91
Slave FOR . . . 91
Naming Components . . . 92
Moving Remotes to Different FOI Port . . . 94
Replacing Master Unit Cards . . . 94
Moving Master Unit Cards . . . 94

**Chapter 5 Commissioning . . . 96**
Preparations . . . 96
Necessary tools . . . 96
Software . . . 96
System Commissioning . . . 97
Pre-requisites . . . 97
Commissioning Process . . . 97
Bird VPN Access . . . 100
VPN Settings . . . 100
Wireless Modem Setup . . . 104
Modem DHCP . . . 104
Modem VPN Tunnels . . . 104
Modem Port Forwarding . . . 104
BGW Configuration . . . 104
Rolling Back Modem Configuration . . . 107
Setup local Network UDP Ports for CGW Access . . . 108
Local Connection to Remote Unit . . . 108
Local Connection to Remote Unit with Two FOR's . . . 109
Connection to BGW from Remote Unit . . . 110

**Chapter 6 RF Commissioning . . . 111**
Setting up the uplink . . . 111
Noise load on Radio Base Station . . . 112
Practical approach . . . 114

**Chapter 7 Troubleshooting . . . 117**
Alarms . . . 117
Base Station Gateway (BGW) Alarms . . . 117
Fiber Optic Remote (FOR) Alarms . . . 117
Remote Unit (RU) Alarms . . . 121
Fiber optic Interface (FOI) Alarms . . . 125
Base Station Interface (BIU) Alarms . . . 131
Medium Power Amplifier (PA) Alarms . . . 134
Variable Gain Amplifier (VGA) Alarms . . . 138
Analog Pre-distortion (APD) Amplifier Alarms . . . 140
Multi-carrier Power Amplifier Interface (MPI) alarms . . . 146

**Chapter 8 Model Identification . . . 153**
System Model Numbers . . . 153
Remote End Unit Part Numbers . . . 154
Public Safety DDR Module Numbers . . . 154
Cellular DDR Module Numbers . . . 154

# Chapter I Introduction

The Bird fiber distributed antenna system (Fiber-DAS) was developed from the start with fiber-optic cable as the distribution medium. This allows for excellent radio performance and best in class system noise figure of less than 3 dB, from the remote unit antenna port to the base station interface port.

The Bird Fiber-DAS system is a flexible and scalable solution, meaning the system can be tailored for almost any requirement. This flexibility provides the user the ability to adjust many of the system's parameters to fit their specific needs.

This manual contains design, installation, and commissioning guidelines, as well as system maintenance practices. It also contains information regarding general practices within in the industry as well.

**Fiber-DAS calculator —** In addition to this manual, the Fiber-DAS calculator is an indispensable tool, this Excel spreadsheet includes the following features, providing insight to how well the system will perform:

- ✓ System Noise Figure calculator
- ✓ Intermodulation performance calculator
- ✓ Uplink / Downlink Balance
- ✓ Dynamic headroom

## RF on fiber

A fiber distributed antenna system (Fiber-DAS) is an efficient method of transmitting radio signals over large distances. Our Fiber-DAS can provide as much as 30 km of fiber between the head-end and the remote unit, providing that the radio access technology used in the Radio Access Network (RAN) does not suffer timing issues and that the fiber loss is within the specification.

The Fiber-DAS uses an infra-red light source, modulated with the combined radio signals that need to be propagated. The fiber channel system is ultra wide-band, ranging from 88 MHz up to 2600 MHz, thus covering most types of radio communication systems including as FM broadcast, VHF communication radios, LTE, TETRA, GSM, CDMA, WCDMA and many other radio access technologies.

Most land mobile radio and cellular systems use Frequency Division Duplex (FDD) which means:

- Two separate fibers, one for the uplink (signals from the terminal towards the base station) and one for the downlink (signals from the radio base station towards the terminal)
- Or a single fiber and the signals must be multiplexed using different wavelengths.

Bird's Fiber-DAS uses wave-length division multiplexing (WDM) as the standard configuration featuring the following:.

- ✓ Single mode fiber
- ✓ Angled connectors
- ✓ Up to 15 dB optical loss

**Note:** *Separate UL/DL fibers can be used if it is necessary or desired.*

The dynamic of the fiber is good enough to tolerate multi-carrier, multi-band and multi-operator solutions, but they share the available dynamics and if there is a large number of carriers the fiber attenuation needs to be considered.

Because the modulation is analog the system requires the fibers to be of single mode type. All connectors used in Bird's Fiber-DAS equipment are SC-APC type. It is important that all connectors (i.e. patches) between the Master Unit (MU) and the Remote Units (RU) be angled, otherwise reflections could result causing problems with the quality of the signals through the system.

## Definitions

The following abbreviations, industry standard lingo and acronyms are used in this document.

| | |
|---|---|
| BGW | Base station Gateway, see "Base Station Gateway (BGW)" on page 4 |
| BIU | Base station interface. Also known as the DIU. It is the electrical interface between the Master Frame Unit (MFU) and the operator radio base station or another source for the radio signals, such as a off-air repeater. See "Base Station Interface Unit (BIU)" on page 8 |
| BTS | See RBS. |
| DAS | A distributed antenna system. Several antennas connected together in a coaxial network so that several antennas can be fed a signal from a central location. |
| DL | See “Downlink” |
| Downlink | The signals that are transmitted from a base station towards a terminal (phone). |
| Fiber | In this document it refers to the telecommunication fibers used to transmit modulated light as pulses or analog variations on a glass fiber. The Bird Fiber-DAS system should use single-mode fiber always. |
| Fiber-DAS | A general name for distribution systems using radio frequency on fiber (RF on Fiber) technology. DAS means “Distributed Antenna System” which refers to the practice of building “spreading nets” with coaxial cables, splitters and antennas to cover larger structures. |
| FOI | Fiber-optic interface. See "Fiber Optic Interface (FOI) unit" on page 15 |
| FOR | Fiber-optic remote interface, part of the Remote Unit connecting to the fiber. |
| GSM | Global System for Mobile Communications |
| ICU | Interconnect Unit, RF splitter/combiner unit, see "Interconnect Unit (ICU)" on page 13 |
| iDEN | Integrated Digital Enhanced Network |
| LTE | Long Term Evolution |
| MFU | Master Frame Unit. The MFU contains the modules that make up the head end of the system. The MFU is the radio base stations interface with the Fiber-DAS system. The MFU is where the downlink signals from the base stations are converted into laser light and sent over the fiber-optics to the Remote Unit (RU) and the uplink signals from the RU are converted to radio frequency signals and transmitted to the radio base station (RBS, BTS). |
| PIM | Passive Intermodulation (PIM) is the generation of interfering signals caused by nonlinearities in the mechanical components of a wireless system. Two signals mix together (amplitude modulation) to produce sum and difference signals and products within the same band, causing interference. |
| QMA | Quick connect/disconnect type of RF Connector. Replacement for SMA RF Connectors. See SMA |
| RBS | Radio Base Station. The infrastructure unit normally connected to the antennas in the radio access network (RAN) and sometimes called just Base Station or Base Transceiver Station (BTS). |
| RGW | Remote Gateway Unit, see "Remote Gateway (RGW)" on page 6 |
| RU | Remote Unit. This is the unit closest to the antenna that converts the downlink signal from the fiber to radio frequencies and distributes it over the antenna system. In the reverse, the uplink radio frequencies are converted to modulated laser light and transmitted back to the MFU. |
| SC-APC | The type of connector used for all Bird optical equipment. It is recommended that all connectors between the MFU and the RU are of this type. SC-AP can also be accepted in patch panels. All connectors MUST BE ANGLED to avoid signal reflections that are detrimental to the signal quality. Fibers need to be of single-mode type. |

| | |
|---|---|
| Single mode fiber | Single Mode Fiber has a relatively narrow diameter, through which only one mode will propagate typically 1310nm or 1550nm. Single Mode Fiber is required for analog modulated systems such as the Bird Fiber-DAS system. |
| SMA | Sub-miniature version A. A Type of RF Connector. |
| Switch | A network switch is a computer networking device that connects devices together on a computer network. |
| TETRA | Terrestrial Trunked Radio. TETRA uses Time Division Multiple Access (TDMA) with four user channels on one radio carrier and 25 kHz spacing between carriers. |
| UL | See “Uplink” |
| UMTS | Universal Mobile Telecommunications System is a system where broadband signaling and packeted data are used. The standards are handled in the 3GPP group and the most common type of modulation is WCDMA. |
| Uplink | The signals that are transmitted from the terminal (phone) towards the base station. |
| SC-PC | A type of fiber-optic connector which is not angled and should not be used with Bird Fiber-DAS |
| SC-UPC | Ultra-polished fiber-optic connector. Not recommended with Bird Fiber-DAS |
| RF | Radio Frequencies, denominates the range of transversal electromagnetic waves with a frequency from 3 kHz to 300 GHz. The upper end of the spectrum is often referred to as microwave frequencies. |
| WCDMA<br>W-CDMA | Wideband Code Division Multiple Access is a technology employed by base station manufacturers who make UMTS base stations. This technology is commonly used in 3G networks and the main modulation employed in Europe. |

The Fiber-DAS system typically consists of three main segments:

**Gateway —** The Gateway acts as a firewall ensuring internal traffic on the system remains internal and at the same time allowing a web interface for monitoring and supervision. The gateway also handles SNMP traps.

**Headend —** The Headend serves as the interface with the operator's base station, housing the units required to transmit and receive communications between the operator's base station and the remote units of the Fiber-DAS system.

**Remote Units —** the remote units are located near the distributed antennas and house the equipment necessary to transmit and receive communications between the antenna and the headend.

***Figure 1 Fiber-DAS System***

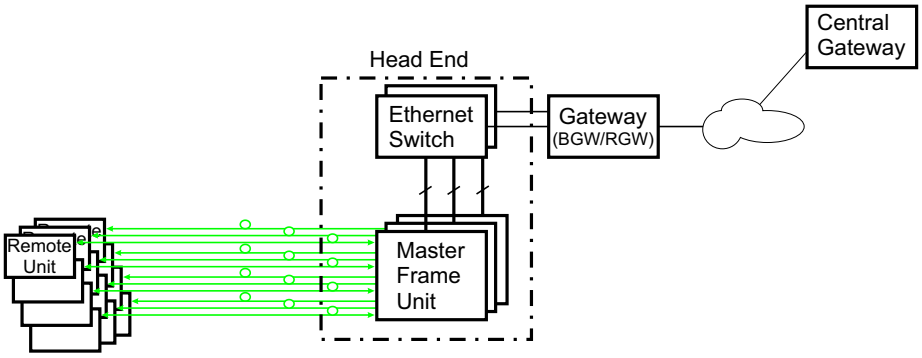


## Gateways

The gateways offered include the Central Gateway (CGW), Base Station Gateway (BGW) and Remote Gateway (RGW).

For remote supervision of a Fiber-DAS a gateway (RGW or BGW) is installed. BGWs and RGWs are typically located with the headend equipment, the RGW is a smaller compact embedded solution while the BGW is a full featured Linux server that can be set up in many different ways.

CGWs are used for monitoring multiple Fiber-DAS systems, communicating with the BGWs and RGWs.

### Central Gateway (CGW)

The CGW is used to provide a single remote access point and to compile alarms from multiple BGW/RGW networks. The unit is a self-powered Linux based server.

### Base Station Gateway (BGW)

The BGW assigns IP addresses to all the modules in the Fiber-DAS system, including the Headend and Remote Units as well as their components.

The BGW is a self-powered Linux based server.

Features of the BGW:

- ✓ Web interface configuration
- ✓ Automatic detection of modules
- ✓ Automatic detection of Remote Units
- ✓ Capable of handling large systems
- ✓ Functions for statistics

- ✓ Northbound communication to CGW
- ✓ Includes firewall to protect local net
- ✓ Portal to your Master Unit
- ✓ User-provided certificate based security via HTTPS

***Figure 2 Base Station Gateway***

The BGW has two Ethernet ports - INT and EXT.

- The INT port is connected to the internal network in the headend's Master Unit to provide the local network for all the modules and the Remote Units. It also provides, via the built-in switch in the Master Unit, a way of locally configuring the network. It provides the web interface for all the settings of the system as well as many other functions.
- The EXT port is a "northbound" Ethernet port that allows the BGW to connect to the Internet, or a WAN/ MAN type of larger network. This means that the system can be monitored and managed remotely.

The BGW is the unit responsible for alarm handling and remote forward of alarms either by SMTP mail forwarding or by SNMP traps. A MIB file for your SNMP system is available from Bird upon request as well as documentation regarding SNMP.

If the BGW is replaced the Remote Units may not show up immediately. This is due to the lease time on the address they have. Eventually they will request a new address and when this is done they will show up.

The BGW can also launch VPN tunnels to a remote supervision center, the CGW. The CGW makes it possible to manage multiple systems from a single location.The CGW can handle a large number of such tunnels, providing a central point for supervising all the installations and collecting alarms and statistics from all the systems as well as centralized alarm management. The BGW can support a second VPN tunnel to the Bird management center providing supervision and management assistance, if needed.

***Table 1 BGW Specifications***

| Parameter | Value |
|---|---|
| Input power voltage | 100-240 VAC |
| Input power frequency | 50 / 60 Hz |
| Operating temperature | 10 to 30 °C (50 to 100 °F) |
| Power rating, Typical | < 100 W |
| Height | 1 U |
| Width | 19" (48.26 cm) |
| Depth | 14.2" (36 cm |
| Weight | < 11 lbs. (5 kg) |

### Remote Gateway (RGW)

The RGW is a small unit similar to the BGW but intended for small systems where there are only a few remotes or where there is no headend. The RGW has a form factor that allows it to be mounted inside a repeater casing.

The RGW can be used to run up to 4 Remote Units from a single Repeater on a single Fiber. The RGW has the capability to connect northbound to a CGW, just like the BGW, and it can also forward alarms through a VPN tunnel to a CGW.

The memory capacity and features are reduced compared to the BGW but for a small system with a single fiber this is an option.

In remote locations without Ethernet, the RGW can be equipped with a modem to allow remote access to the system. Typically a 3G modem is used allowing a VPN tunnel from the RGW to a CGW, enabling supervision, monitoring and control of the system.

## Headend

The headend consists of a 19-inch rack with modules that are selected depending on the system design. Generally all headend Units contain:

- Network switch - connects communication paths between the modules
- Interconnect Unit (ICU) - RF splitter/combiner (rack-mount unit or module in the MFU)
- Master Frame Unit (MFU), may contain some or all of the following:
  - ✓ Power supply
  - ✓ Base Station Interface Unit (BIU)
  - ✓ Fiber-Optic Interface card (FOI)
  - ✓ Repeater
  - ✓ ICU

A DHCP server built into the RGW and BGW will assign IP addresses to all the headend subunits in the rack and the Remote Units when they are connected to the system. The configuration is automatic and creates a protected sub-net for the system.

### DCS - Network Switch

The network switch is an AC powered, 24-port switch with Spanning Tree Protocol (STP). The network switch provides an Ethernet link between the MFU and the BGW. Each card slot in the MFU has a dedicated Ethernet port, each port is connected to the network switch and the network switch is connected to the BGW.

A DC powered option is also available.

Actual network switch may be different from the image.

## Master Frame Unit (MFU)

The Master Frame Unit (MFU) houses the Power Supplies, Base Station Interface Units (BIU), Interconnection Units (ICU), and Fiber-Optic Interface (FOI) cards. Figure 3 shows an MFU equipped with 3 BIUs, 6 FOIs and one Power Supply.

***Figure 3 Master Frame Unit***

### Functional description

One MFU supports several modules, or combination of module types. The modules can be placed anywhere in the frame. There are 16 single slot card positions in each MFU, however module widths vary (see each module's specifications) so the number of module that will fit in an MFU depends on the module type. One MFU can house up to 4 power supplies, 8 ICUs, 8 wide BIUs, 16 slim BIUs, 16 FOIs, or combination of modules. See Table 2.

Each MFU requires at least one power supply, although the power supply does not need to be housed within the MFU. Quite often a system has more than one power supply and they are usually placed together in one MFU for easy access. Each MFU has two power input connectors, one primary and one redundant. A redundant power supply connected to an MFU ensures continued operation if one of the power supplies should fail.

The MFU contains two ventilation fans circulating ambient air through the units housed in the frame. These are high quality fans with a high mean time between failure (MTBF).

Each Module in the MFU are assigned an IP addresses via DHCP leases, modules inherit the MAC address from the backplane, this ensures that a new module inserted in the rack receives the same IP address as the one it is replacing, without the need of manual configuration.

***Table 2 MFU Specifications***

| Parameter | Value |
|---|---|
| Input Voltage | 28 VDC |
| Power connector | Molex, 10 Pin |
| Ethernet connector | RJ45 |
| Weight (without modules) | 5.5 lbs (2.5 kg) |
| Temperature range, Operational | 0 to 40 °C (32 to 104 °F) |
| Width | 19" (48.3 cm) |
| Height | 3 U, 5.25" (13.34 cm) |
| Depth | 11.8" (30 cm) |
| Maximum number of each type of modules supported | |
| PSU | 4 |
| BIU (DBI3xx, DBI3xxC(compact)) | 8, 16 |
| FOI (DOI401, DOI30x) | 8, 16 |
| ICU | 8 |

## Base Station Interface Unit (BIU)

The Base Station Interface Unit (BIU) is the interface between the operator's base station and the Fiber-DAS system. The primary purpose of the BIU is to adjust uplink and downlink signal levels.The BIU is powered from the MFU backplane and communicates via Ethernet with the BGW.

### *Figure 4 BIU Signal Flow*

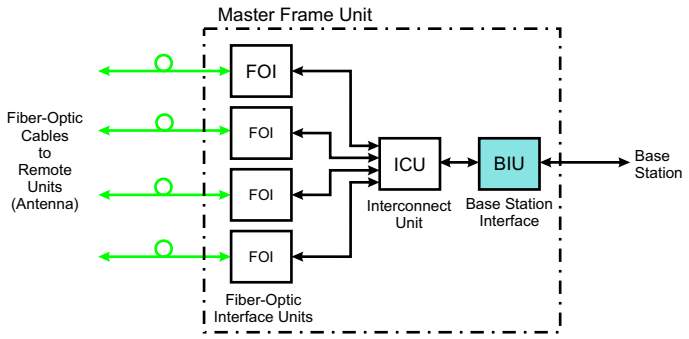


The BIU has uplink and downlink RF connectors on the front panel and is available in two variants, one containing duplex filters or one with separate uplink/downlink paths, depending on the needs for the connection to the base station. In most cases the duplexed version with a combined DL/UL ports is used.

In addition to duplexing options, there is a single slot and a dual version of the BIU:

- The DBI3xx (wide version) includes an external alarm connector (DB9) and requires two MFU slots.
- The DBI3xxC (compact version) does not have an external alarm connector (DB9) , and uses only one MFU slot.

### *Figure 5 Base Station Interface Unit (BIU)*

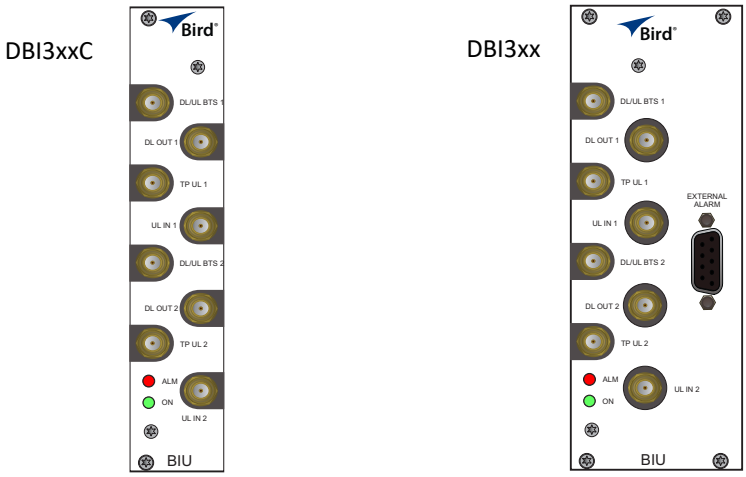


### Functional description

The BIU has four SMA ports (female type) to connect the RBS/BTS.

- Duplexed versions have combined DL/UL connectors used to connect to the RBS, and there are UL test (TP) connectors that can be used to monitor the signal out from the BIU.
- Non-duplexed (simplex) versions have the test connectors replaced by UL connectors and the normally combined UL/DL connectors are replaced by DL only connectors.

The BIU has four QMA ports (female type) that are normally used to connect it to an ICU.

- There are two uplink (input, RX) ports and two downlink (output, TX) ports.
- These are two separate paths, the isolation between DL 1 and DL 2 ports and the isolation between the UL 1 and UL 2 ports is > 50 dB.

There are two separate RF paths in the BIU. The BIU is configured for the specific frequency band it will serve. The two paths in the BIU cannot have different frequencies; a 900 MHz BIU will have two 900 MHz paths and cannot be combined with an 1800 MHz path. Separate frequencies require the use of an additional BIU.

RF patch cables are used to patch the DL and UL paths (QMA) to the ICU.The RF patch cables high quality, low PIM cables such as Bird's DCC320 cable set.

The DBI 3xx (dual slot) BIU has an alarm output port (DB9 female connector) on the BIU which can be used to connect external alarms.

### *Table 3 Alarm Port Pinout*

| Pin | Signal (A) | Signal (B) |
|---|---|---|
| 1 | RS485+ | RS485+ |
| 2 | Alarm out 1 | Alarm out 1 |
| 3 | Ground | Ground |
| 4 | Not connected | Alarm in 2 |
| 5 | Not connected | Alarm in 4 |
| 6 | RS485+ | RS485+ |
| 7 | Alarm out 2 | Alarm out 2 |
| 8 | G | Alarm in 3 |
| 9 | Not connected | Alarm in 1 |

The BIU is technology neutral and the downlink path contains settable attenuators that can be used to adjust the signal strength to proper levels before feeding them into the ICU. In the uplink there is an amplifier followed by a settable attenuator used to adjust the signal and the noise level into the base station uplink.

**CAUTION**

Overdriving the RF source input into the BIU will cause permanent equipment failure and will void the warranty. The installer must ensure that input levels are not exceeded. Plan for maximum power out of the RF source and attenuate accordingly with external attenuators if needed.

All RF connections are made on the front of the BIU. The maximum recommended input power to the BIU is 30 dBm. A high power alarm is activated at > 30 dBm and a low power alarm at < 10 dBm input power.

Input power above the recommended level can cause permanent unit failure. For high power base stations, an attenuator should be used to ensure that the input power to the BIU can never exceed specifications.

There is a 0 dBm input version of the BIU available on request.

| BIU Type | Minimum DL Input | Maximum DL Input |
|---|---|---|
| Low Level | -7dBm | +7dBm |
| High Level | +20dBm | +33dBm |

**CAUTION**

The UL from the FOI card is capable of damaging the UL port on the BIU. Maximum input to the BIU UL should be no higher than +13dBm. Use care to properly set FOI levels prior to enabling RF.

The schematic in Figure 6 shows one of the channels in the BIU. The signal detector for the downlink level alarms is shown in the top right corner.

The UL1 and UL2 uplink test ports are 3 dB lower than the signal on the corresponding DL/UL BTS port.

### Figure 6 Schematic of One BIU RF Path

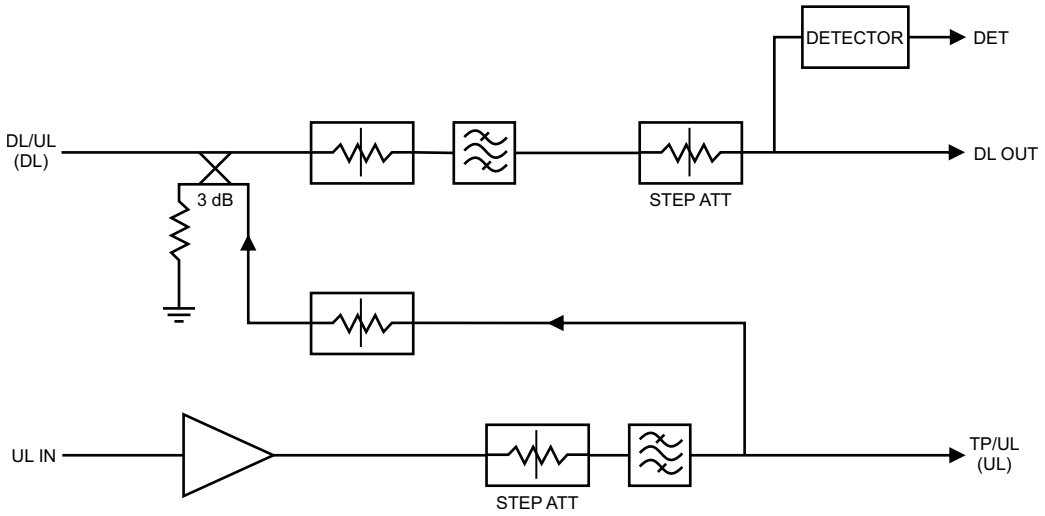


Table 4 lists standard cellular BIU's. Other configurations are available upon request as well as units without internal duplex filtering.

### Table 4 Standard Variants of the BIU

| Configuration | UL MHz | DL MHz | RF Input | High Level P/N | Low Level P/N |
|---|---|---|---|---|---|
| 2 x FM | - | 87-108 | Simplex | DBI302 | DBI402 |
| 2 x VHF | 136-174 | 136-174 | Simplex | DBI312 | DBI412 |
| 2 x TETRA 390 MHz† | 380-385 | 390-395 | Duplex | DBI301 | DBI401 |
| 2 x UHF | 450-470 | 450-470 | Duplex | DBI313 | DBI413 |
| 2 x 700 MHZ ABC-band | 698-716 | 728-746 | Duplex | DBI307 | DBI407 |
| 2 x 700 Upper C | 777-787 | 746-756 | Duplex | DBI304 | DBI404 |
| 2 x 700 Public Safety | 799-805 | 769-775 | Duplex | DBI314 | DBI414 |
| 2 x SMR 800 | 806-824 | 851-869 | Duplex | DBI303 | DBI403 |
| 2 x 850 MHz | 824-849 | 869-894 | Duplex | DBI308 | DBI408 |
| 2 x 800 | 832-862 | 791-821 | Duplex | DBI305 | DBI405 |
| 2 x GSM-R 900 | 876-880 | 921-925 | Duplex | DBI310 | - |
| 2 x 900 MHz | 880-915 | 925-960 | Duplex | DBI309 | DBI409 |
| 2 x 1800 MHz | 1710-1785 | 1805-1880 | Duplex | DBI318 | DBI408 |
| 2 x 1900 MHz | 1850-1915 | 1930-1995 | Duplex | DBI319 | DBI419 |
| 2 x UMTS 2100 MHz | 1920-1980 | 2110-2170 | Duplex | DBI320 | DBI420 |
| 2 x AWS 2100 MHz | 1710-1780 | 2110-2180 | Duplex | DBI321 | DBI421 |
| 2 x LTE 2600 | 2500-2570 | 2620-2690 | Duplex | DBI326 | DBI426 |

† There are several options for the TETRA 5 MHz standard bands.

### Table 5 RF and Electrical Performance of the BIU

| Parameter | | Value |
|---|---|---|
| Downlink attenuation | Settable | 10-30 ± 3 dB |
| Uplink Gain for modules < 1000 MHz | Settable | 10 to 20 ± 3 dB |
| Uplink Gain for modules > 1000 MHz | Settable | -10 to 10 ± 3 dB |
| IM3 performance | | > 55 dB |
| Max input non-destructive | | < 36 dBm |
| High input alarm threshold level | | >33 dBm |
| Low input alarm threshold level | | <13 dBm |
| Input return loss | | > 20 dB |
| Impedance for all RF ports | | 50 Ω |
| Isolation between ports | | > 60 dB |
| Power consumption | | < 15 W |
| Temperature range | | 0-45 °C (32 to 113 °F) |

### Table 6 BIU Mechanical Specifications

| Parameter | Value |
|---|---|
| Base station RF ports | SMA, Female |
| Test ports uplink (if present) | SMA, Female |
| Interconnecting RF ports to ICU | QMA, Female |
| Alarm connector (optional) | DB9, Female |
| Module Width<br>DBI3xx<br>DBI3xxC(compact) | <br>2 Slots<br>1 slot |

## BIU Indicator Operation

There are two LEDs located on the BIU front panel. One is the power LED (green), the other is the alarm LED (red). Both LEDs indicate a number of states by different flashing sequences, see Table 7.

In an error state the web interface should be used to check the actual condition of the BIU but the LEDs can give a quick indication on the state of the unit. The LEDs are also useful for locating the physical unit if several BIUs are installed in the same rack.

### Table 7 Indicator Behavior

| State | ON LED | ALM LED | Note |
|---|---|---|---|
| Booting | 2 Hz | Off | Normal boot |
| Booting standalone mode | 2 Hz | 2 Hz | Not attached to rack |
| Booting read of MAC address failed | 2 Hz | On | Error |
| Starting | 0,1 Hz 90% | 0,1 Hz 90% | Kernel startup |
| Operation | 0,5 Hz 10% | Off | Normal operation |
| Operation | 0,5 Hz 10% | 1 Hz 10% | Minor alarm state |
| Operation | 0,5 Hz 10% | 2 Hz 25% | Major alarm state |
| Operation | 0,5 Hz 10% | On | Critical alarm state |

### *Figure 7 BIU Interfaces*

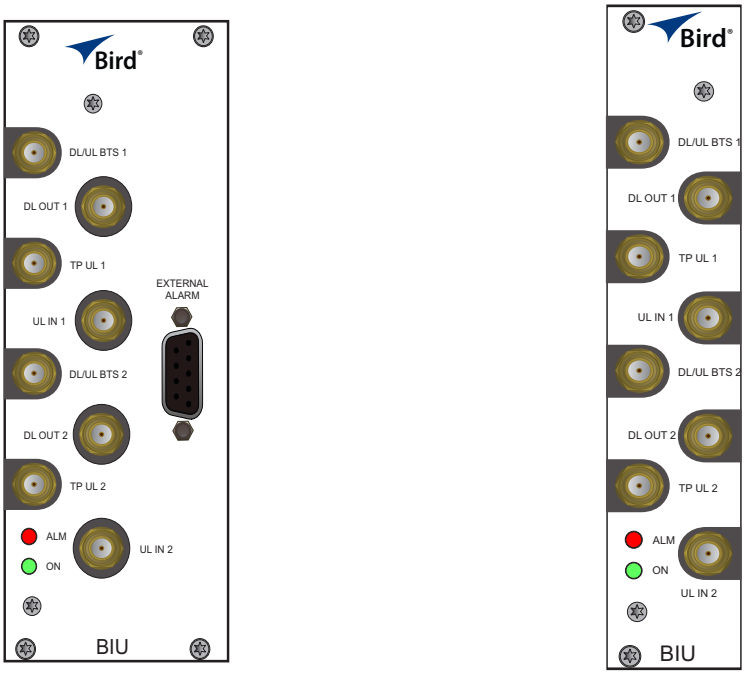


| Item | Description |
|---|---|
| **DL/UL BTS 1 / 2** | Connection from the radio base station (RBS). |
| **TP UL 1/2** | Test port for the uplink of the DL/UL BTS port. The signal will be 3dB below the DL/UL BTS port. Port is not valid on the simplex BIU. |
| **DL OUT 1/2** | Simplex downlink feed to the FOI. |
| **UL IN 1/2** | Simplex uplink from the FOI. The BIU will attenuate and/or amplify the signal and then route to the DL/UL BTS port. |
| **EXTERNAL ALARMS** | Used for external alarm monitoring (DBI3xx, two slot version only). |
| **ON/ALM LED** | The LEDs indicate various states, see Table 7. |

## Interconnect Unit (ICU)

Interconnect units (ICU) are used to couple signals between the BIUs and the FOIs.

The functional purpose of the ICU is:

- Downlink - Split the signal from the BIU and route the balanced signals (minus insertion loss) to the FOIs.
- Uplink - Combine the signals from the FOIs and route the sum of the signals (minus insertion loss) to the BIU.

The RF ports on the ICU are QMA.

***Figure 8 Interconnect Unit Signal Flow***

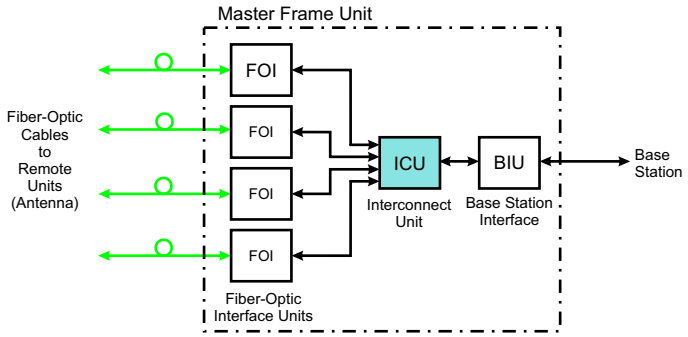


### MFU ICU

The MFU ICUs are available in several different configurations to support a variety of system configurations. These units are inserted into the MFU and provide signal routing to and from the BIUs and FOIs.

***Figure 9 MFU ICU***

### Rack-mount ICU (DIU301, DIU302)

The Rack-mount ICU is a 1U unit that contains four fields containing splitters/combiners. Each field is capable of splitting one input into eight outputs or combining eight inputs into one output.

***Figure 10 Rack-mount ICU***

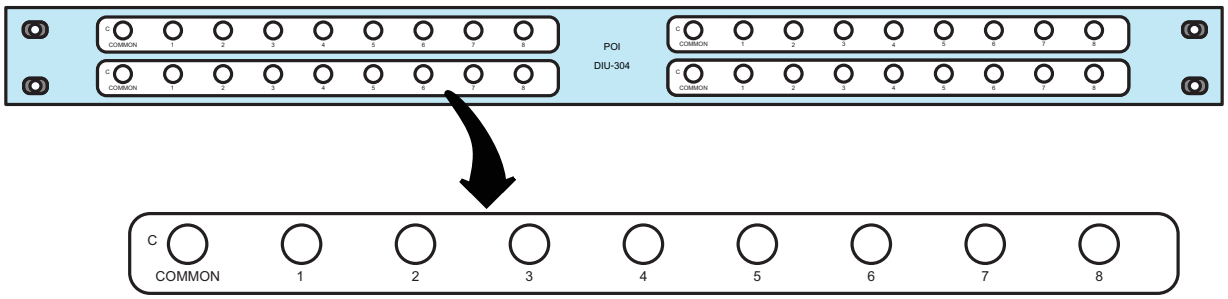


Each of the 4 fields has a COMMON port and ports 1-8.

- When used as a combiner, the signals to combine are connected to input ports 1-8, the sum of the signals (minus insertion loss) will be output on the COMMON port.
- When used as a splitter, the combined signal is input on the COMMON port and output on ports 1-8, with the output ports having balanced signals (minus insertion loss).

***Table 8 Rack-mount ICU Specifications***

| Parameter | Value |
|---|---|
| Insertion loss (nominal) - DIU301 | 37 dB |
| Insertion loss (nominal) - DIU302 | 21 dB |
| Bandwidth - DIU301 | 680-2700 MHz |
| Bandwidth - DIU302 | 88-2700 MHz |
| Operating Temperature | -25 to +55 C (-13 to +131F) |
| Impedance | 50 Ohm |
| IM3 performance | > 50 dB |
| Return loss performance | > 20 dB |
| Maximum common port power | 20 dBm |
| Isolation between ports in same strip | > 15 dB |
| Isolation between ports in different strips | > 50 dB |

### QMA cable kit

A QMA cable kit (Bird part number DCC320) is available for use with the ICU. The kit contains 32 QMA to QMA cables (see Table 9) that can be used to patch between the BIU to the ICU, BIU to the FOI or ICU to FOI.

***Table 9 QMA Cable Kit***

| Length | Quantity |
|---|---|
| 250 mm (9.8”) | 13 |
| 350 mm (13.8”) | 13 |
| 500 mm (19.7”) | 6 |

## Fiber Optic Interface (FOI) unit

The FOI converts the RF signals in the downlink to fiber-optical laser output that is transmitted on the fiber to the remote unit. It also receives the laser light transmitted by the Remote Unit and converts it back to RF signals that are then routed to the ICU and/or BIU.

### *Figure 11 FOI Signal Flow*

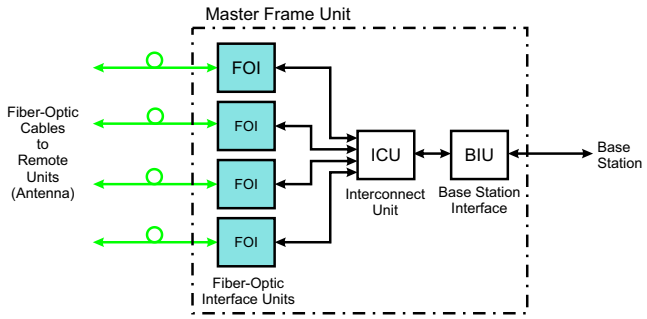


The FOI is powered from the MFU backplane and communicates via Ethernet with the BGW.

### *Figure 12 Fiber Optic Interface (FOI) Unit*

**WARNING**

Avoid looking into connected fibers and receptacles.

The laser used in this system is a Class 3b laser that produces invisible infra-red coherent light. Not safe to view with optical instruments. Always put the protection caps on unused fibers and receptacles.

This interface is designed to work with SC-APC connectors (angled physical connector) and single mode fibers only. All connectors between the master unit and the remote unit must be APC, otherwise problems with reflections will arise, which could cause severe problems in the system.

The Ethernet communication between the Headend and the Remote Units takes place on two sub-carriers in the FOI where the Ethernet signals are superimposed on the RF signals. The Ethernet sub-carriers are on frequencies not used by the RF traffic so they do not cause any system performance degradation.

As shown in Table 10, Bird offers two styles of FOI cards. The "DOI300 Series FOI" on page 16 and the "DOI401Series FOI" on page 19.

### *Table 10 FOI Variants*

| Parameter | Fiber Ports | Wavelength |
|---|---|---|
| DOI 301 | 2 | 1310 nm (RX), 1550nm (TX) |
| DOI 302 (WDM) | 1 | 1310 nm (RX), 1550nm (TX) |
| DOI 380x | 1 | various wavelengths available |
| DOI401 | 4 | 1310 nm (RX), 1550nm (TX) |

## DOI300 Series FOI

The DOI300 series supports a single fiber optic link. The fiber-optic interface can either be a WDM (DOI302) which is most commonly used or an optional duplex feed with separate UL and DL fibers (DOI301). Bird also offers a WDM option (DOI380x). The WDM utilizes the duplex feed style card but the wavelength for the downlink are defined by the "x" in the DOI380x part number. Note that the Remote Unit will need to be ordered with the correct WDM uplink wavelength. Refer to the chart for the WDM wavelengths offered.

### DOI300 Series Serving Multiple Remotes

The DOI300 Series FOI can serve up to 4 Remote Units on a single fiber run when using an optical splitter in the first Remote Unit. When utilizing the DOI302 WDM module each Remote Unit in the series must have different optical wavelengths in the uplink path to avoid interference.

When utilizing optical splitters, the optical loss of the splitter must be accounted for in the optical link budget. The DOI300 series FOI has a maximum link budget of 15 dBo.

Figure 13 shows the allowed FOI to FOR/Remote configurations. Bird offers various splitter options for the FOR/Remote to help account for optical losses. The standard optical splitter will have balanced outputs for each path. Consult with Bird engineering for special applications.

***Figure 13 FOI to Remote Unit Configurations***

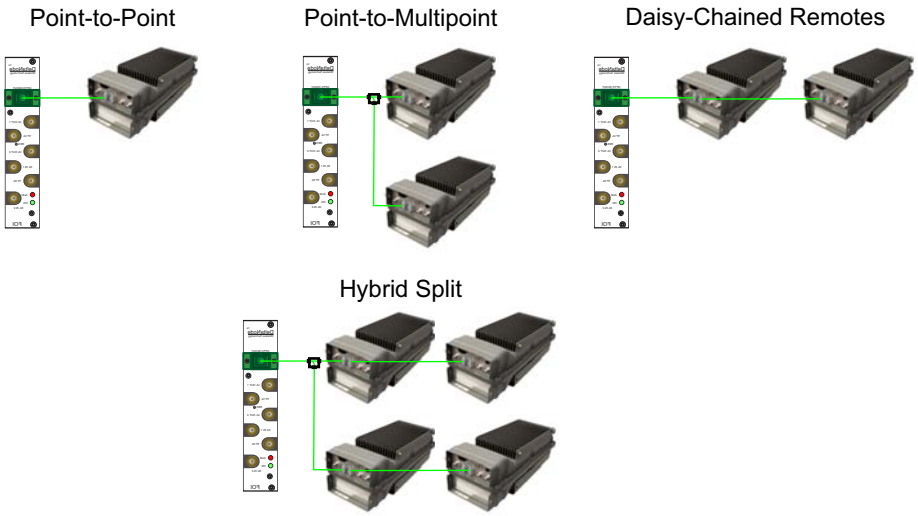


## Functional description

The FOI has a nominal gain of 35 dB and the laser transmitter should see a maximum composite input power of 0 dBm. This means that for 0 dB attenuation in the downlink a maximum input of -35 dBm composite power is recommended (when attenuators are set to 0 dBm). If the downlink attenuator is set to a higher value the maximum recommended input is adjusted accordingly.

The output power of the laser is calibrated to 3000 µW. This can be used to check the loss over fiber in the remote because the remote reports the received optical levels. The loss may be different in the uplink compared to the downlink because of different wavelengths on the laser.

The FOI contains several adjustable attenuators which are used to compensate for loss before the FOI (e.g. in the ICU) and for loss on the fiber in the uplink. There are two sets of RF ports on the FOI that can be used to connect signals from two different strips in the rack-mount ICU, or two different MFU ICUs.

Figure 14 is a block diagram showing the downlink path in the FOI and how the test port is connected. There are two attenuators that can be set in the downlink path. This allows for balancing the input signals from two different signal sources so that they can share the dynamics of the laser properly.

### Figure 14 FOI Downlink Block Diagram

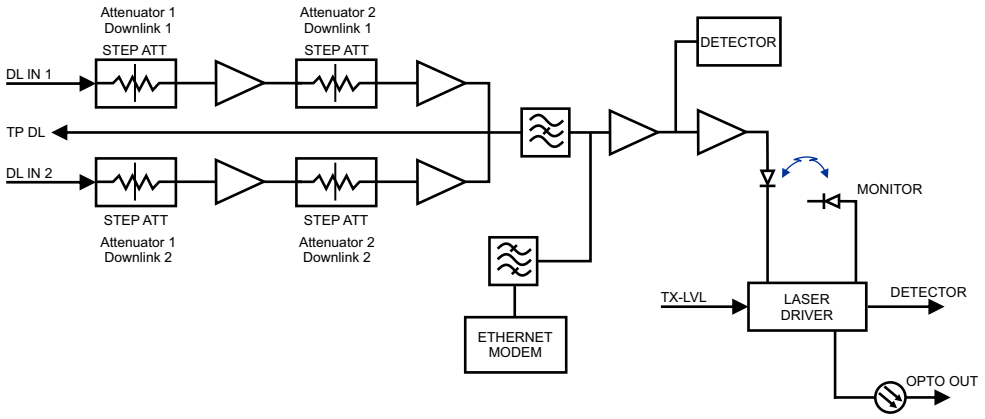


The RF drive levels are measured and accessible in the web interface.

TP DL is a test point measurement port for the downlink path. The RF level at TP DL will be the same as the input to the DL ports minus the GUI attenuator settings.

TP DL = “DL IN 1" minus “Att. 1 Downlink 1" minus “Att. 2 Downlink 1".

TP DL = “DL IN 2" minus “Att. 1 Downlink 2" minus “Att. 2 Downlink 2".

Example: Input into DL is -25dBm with the GUI setting for “Att. 1 Downlink 1" of 10 and a GUI setting for “Att 2 Downlink 1" of 0. The test point measurement will be: -25dB (input) minus 10dB (attenuator #1) minus 0dB (attenuator #2) = -35dBm.

Figure 15 is a block diagram showing the uplink path in the FOI and how the test port is connected. There are two common attenuators, and two uplink attenuators that can be set in the uplink path.

### Figure 15 FOI Uplink Block Diagram

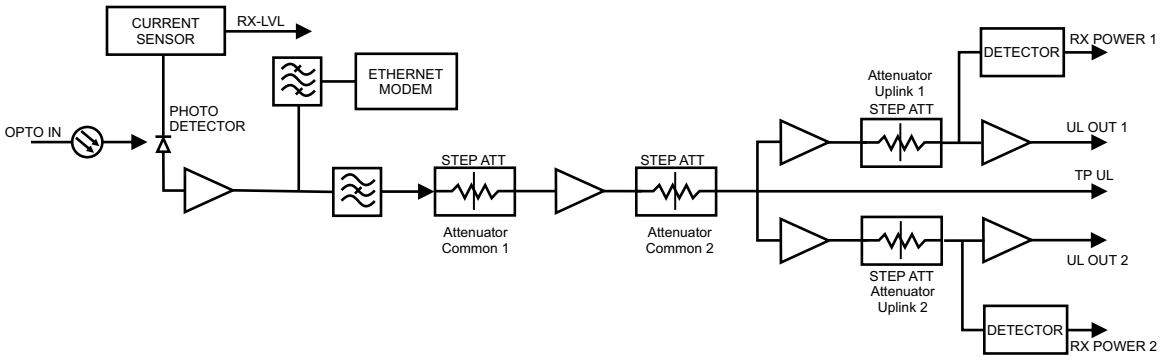


The UL test port on the FOI is tapped before the individual uplink path attenuators. The output level of TP UL will be:

TP/UL[dB] = “Att. Uplink 1" setting - 20dB

TP/UL[dB] = “Att. Uplink 2" setting - 20dB

Example: If the FOI GUI setting for “Att. Uplink 1" is 0, the test port uplink path 1 signals will be 20dB lower than the uplink signal on the “UL Out 1" port.

Example: If the FOI GUI setting for “Att. Uplink 2" is 20, the test port uplink path 2 signals will be equal to the uplink signals on “UL Out 2" port.

### Figure 16 DOI301/302 Interfaces

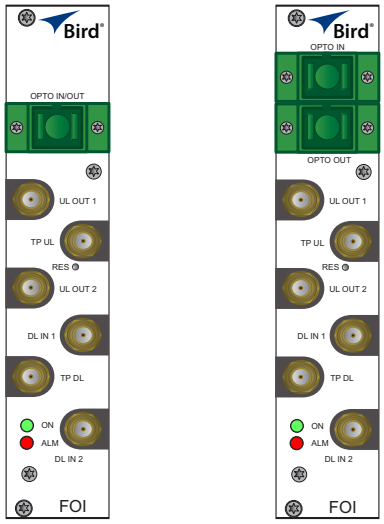


DOI302
With WDM

DOI301
Without WDM

| Item | Description |
|---|---|
| OPTO IN/OUT | SC-APC connection for the optical fiber.<br>DOI302 module with built in WDM has a single connector (combined RX/TX).<br>DOI301 module without WDM has two connectors, one for TX and one for RX. |
| UL OUT 1/2 | Uplink ports (QMA) to the ICU. |
| DL IN 1/2 | Downlink ports (QMA) to the ICU. |
| TP UL/DL | Test ports (QMA) used to check the signal levels or noise in the system. |

The two LEDs on the unit provide FOI status as shown in Table 11.

### Table 11 FOI LED Indicators

| State | ON LED | ALARM LED | Note |
|---|---|---|---|
| Booting | 2 Hz | Off | Normal boot |
| Booting standalone mode | 2 Hz | 2 Hz | Not attached to rack |
| Booting read of MAC address failed | 2 Hz | On | Error |
| Starting | 0,1 Hz 90% | 0,1 Hz 90% | Kernel startup |
| Operation | 0,5 Hz 10% | Off | Normal operation |
| Operation | 0,5 Hz 10% | 1 Hz 10% | Minor alarm state |
| Operation | 0,5 Hz 10% | 2 Hz 25% | Major alarm state |
| Operation | 0,5 Hz 10% | On | Critical alarm state |

### Table 12 DOI302 Specifications

| Parameter | Value |
|---|---|
| Maximum fiber loss from MU to RU, Optical, | 15 dBo |
| Optical output power, Calibrated | 3 000 µW |
| Maximum number of RU supported on single fiber | 4 |
| Input RF power recommended, Composite | -50 to -35 dBm |
| Power consumption | < 15 W |
| Operational Temperature range | 0 to 45 °C (32 to 133 °F) |
| Module Width | 1 card slot |
| Optical connector type | SC-APC |
| RF connector type | QMA Female |

### DOI401Series FOI

The DOI401 four port FOI is very similar to DOI302 expect that it has four WDM optical ports instead of one. This allows the user to install dedicated fibers to each Remote Unit without having to balance optical splitter link budgets for each remote in a group. The balanced splitter loss is accounted for in the 7 dBo link budget of the DOI401. Unlike the DOI302, the DOI401 does not require the UL optical signals to be on different wavelengths.

### *Figure 17 DOI401 Interfaces*

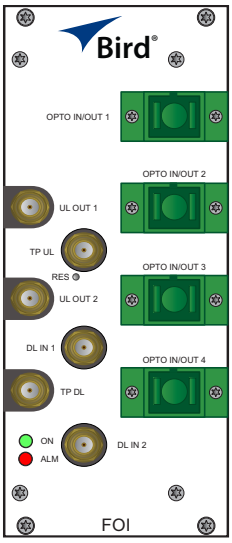


| Item | Description |
|---|---|
| OPTO IN/OUT | SC-APC connections for the optical fiber. |
| UL OUT 1/2 | Uplink ports to the ICU/BIU. |
| DL IN 1/2 | Downlink ports to the ICU/BIU. |
| TP UL/DL | Test ports used to check the signal levels or noise in the system. |

### *Table 13 DOI401 Specifications*

| Parameter | Value |
|---|---|
| Maximum fiber loss from MU to RU, Optical, | 7 dBo |
| Optical output power, Calibrated | 3 000 µW |
| Maximum number of RU supported on single fiber | 1 |
| Input RF power recommended, Composite | -50 to -35 dBm |
| Power consumption | < 20 W |
| Operational Temperature range | 0 to 45 °C (32 to 113 °F) |
| Module Width | 2 card slot |
| Optical connector type | SC-APC |
| RF connector type | QMA Female |

## PSU – the rack power supply

The Power Supply Unit provides DC power to the Master Unit backplane. The unit is shipped as 240 VAC or 115 VAC units depending on the country. A -48 VDC input is offered as an option.

*Figure 18 PSU*

**AC Power Supply** **DC Power Supply**

### Functional description

The AC power supply can handle up to 16 cards or one chassis full of cards. The DC power supply is capable of handling 12 cards or one full chassis that includes the DC power supply.

All connectors are on the front side of the power supply. Figure 18 shows the PSU equipped with European power inlet.

The PSU outputs are two 10-pin Molex connectors, these are connected to the chassis to supply power. One connector should always be connected to the chassis holding the PSU (for driving the fans).

One chassis can hold up to 4 power supplies. Two PSU's may be connected to a chassis to provide redundancy.

*Table 14 PSU Specifications*

| Parameter | Value |
|---|---|
| Input power voltage, Mains<br>DPU301<br>DPU302 | <br>86-264 VAC, 50 / 60 Hz<br>38 - 60 VDC |
| Operating temperature | -25 to 55 °C (32 to 131 °F) |
| Power rating | 240 W |
| Width | 4 card slots |

## Remote Unit (RU)

Remote units are available in a wide range of frequencies, gain and output power to cater to support a variety of requirements. Remote units are also capable of supporting more than one frequency band in a single unit.

### Chassis types

Remote units (RUs) are available in two chassis, a single compact chassis for 1-2 bands and a dual chassis for up to 4 bands (Figure 19). There are multiple configurations that allow for various power level of amplifiers to be placed into the chassis. For example it is possible to build a dual chassis with 2 medium power bands and 1 high power band in the same remote. Each side of a dual chassis is virtually identical to a single chassis remote unit. This ensures unparalleled flexibility when building multiple operator / multiple band solutions.

A dual chassis may have 1-2 fiber optical remote units (FOR). This allows for redundant fiber feeds, multiple-input and multiple-output (MIMO) applications, and dedicated amplifiers.

***Figure 19 Remote Unit Chassis Types***

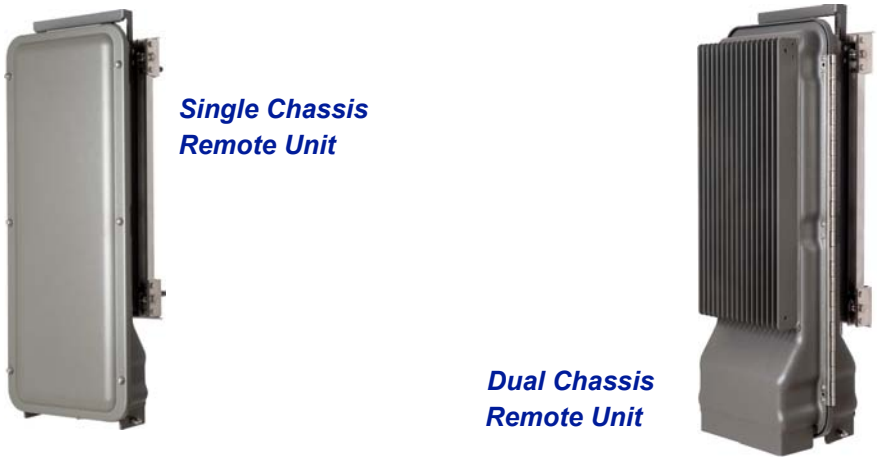


All Remote Units have an excellent noise figure, contributing to an overall noise figure for the whole system from remote to head-end into the base station of < 3 dB for the RF link.

Both chassis comply with IP65 protection for use in any environment. The durable coating assists in convection cooling. No fans are used for the Remote Units.

> **Note:** *The heat generated by the Remote Units when powered up is used to prevent water ingress into units. Remote units must remain powered on when mounted outdoors.*

Both wall or pole mounting kits are available for chassis mounting.

Table 15 contains a list of the most common remote units that are used with the Bird Fiber-DAS system. Variants are available upon request.

***Table 15 Remote Comparison Table***

| Product code | Pout (ETSI)† | Pout (FCC) | Bands |
|---|---|---|---|
| DDR (medium power). See "DDR" on page 22. | 26-30 | 33 | 1-4 |
| DDS (High power quad band). See "DDS" on page 26. | | 41 | 1-4 |
| DDH (high power). See "DDH" on page 28. | 32-43 | 43 | 1-2 |
| DDU (high power). See "DDU" on page 31. | | 46 | 1-2 |

† Actual power determined by frequency band and spectrum demands.

## DDR

### ETSI standard

Bird's Distributed Radio head is a high performing wideband radio head equipped with a linear power amplifier supporting all modulations. The light weight, convection cooled IP65 chassis secures the performance in almost any environment.

*Table 16 General Specifications*

| | |
|---|---|
| Noise Figure, Typical | 3 dB |
| Delay excluding optical fiber | < 0.5 µs |
| Power Supply<br>Standard<br>Optional | <br>85 to 264 VAC<br>-32 to -100 VDC |
| Operating Temperature | -25 to 55 °C (-13 to 131 °F) |
| Casing | IP65 |

*Table 17 Specifications DDR100 (Single Band) & DDR200 (Dual band)*

| | |
|---|---|
| Power Consumption, max, DDR 100 (200) | 90 (180) W |
| Dimensions, W x D x H | 11.8 x 5.1 x 27.6 in.<br>30 x 13 x 70 cm |
| Weight | < 34 lbs (15.2 kg) |

*Table 18 Specifications DDR300(Triple Band) & DDR400(Quad Band)*

| | |
|---|---|
| Power Consumption, max, DDR 300 (400) | 270 (360) W |
| Dimensions, W x D x H | 11.8 x 8.7 x 27.6 in.<br>30 x 22 x 70 cm |
| Weight | < 60 lbs (27.2 kg) |

### Cellular Products

*Table 19 Available Products, ETSI*

| System | UL Frequency MHz | DL Frequency MHz | Pout (DL) dBm/c, 1 Carrier | Pout (DL) dBm/c, 2 Carriers | Standard |
|---|---|---|---|---|---|
| FM | | 88 - 108 | 22 | | ETSI |
| TERTRA VHF | 136 - 174 | 136 - 174 | 22 | | ETSI |
| TETRA, Public Safety | 380 - 385 | 390 - 395 | 26 | 23 | ETSI |
| TETRA, Commercial | 410 - 415 | 420 - 425 | 26 | 23 | ETSI |
| TETRA, Commercial | 415 - 420 | 425 - 430 | 26 | 23 | ETSI |
| CDMA450 | 452.5 - 457.5 | 462.5 - 467.5 | 33 | 28 | FCC |
| GSM-R | 876 - 880 | 921 - 925 | 26 | 23 | ETSI |
| EGSM900 | 880 - 915 | 925 - 960 | 26 | 23 | ETSI |
| GSM1800 | 1710 - 1785 | 1805 - 1880 | 28 | 25 | ETSI |
| UMTS | 1920 - 1980 | 2110 - 2170 | 30 | 25 | 3GPP |
| LTE 2600 | 2500-2570 | 2620-2690 | 30 | 43 | 3GPP |

## FCC/IC standard

Bird's Distributed Radio head is a high performing wideband radio head equipped with a linear power amplifier supporting all modulations. The light weight, convection cooled IP65 chassis secures the performance in almost any environment.

### *Table 20 General Specifications*

| | |
|---|---|
| Noise Figure, Typical | 3 dB |
| Delay excluding optical fiber | < 0.5 µs |
| Power Supply<br>Standard<br>Optional | <br>85 – 264 VAC<br>-32 to -100 VDC |
| Operating Temperature | -25 to 55 °C (-13 to 131 °F) |
| Casing | IP65 |

### *Table 21 Specifications DDR100 (Single Band) & DDR200 (Dual band)*

| | |
|---|---|
| Power Consumption, max, DDR 100 (200) | 90 (180) W |
| Dimensions, W x D x H | 11.8 x 5.1 x 27.6 in.<br>30 x 13 x 70 cm |
| Weight | < 34 lbs (15.2 kg) |

### *Table 22 Specifications DDR300 (Triple Band) & DDR400 (Quad Band)*

| | |
|---|---|
| Power Consumption, max, DDR 300 (400) | 270 (360) W |
| Dimensions, W x D x H | 11.8 x 8.7 x 27.6 in.<br>30 x 22 x 70 cm |
| Weight | < 60 lbs (27.2 kg) |

### Cellular Products

### *Table 23 Available Products, FCC/IC*

| System | UL Frequency MHz | DL Frequency MHz | Pout, DL, dBm (Composite) | Standard |
|---|---|---|---|---|
| LTE LB | 698 - 716 | 728 - 746 | 33 | FCC/IC |
| LTE UB | 776 – 787† | 746 -757† | 33 | FCC/IC |
| iDEN | 806 - 824 | 851 - 869 | 33 | FCC/IC |
| Cellular | 824 - 849 | 869 - 894 | 33 | FCC/IC |
| PCS1900 | 1850 - 1915 | 1930 - 1995 | 33 | FCC/IC |
| AWS | 1710 - 1780 | 2110 - 2180 | 33 | FCC/IC |
| WCS 2300 | 2305 - 2315 | 2350 - 2360 | 33 | FCC/IC |
| IMT-E | 2500 - 2570 | 2620 - 2690 | 33 | FCC/IC |

† Sub-bands available

**Class B Industrial Booster —** This equipment is a Class B Industrial Booster and is restricted to installation as an In-building Distributed Antenna System (DAS).

**FCC RF Exposure —** This equipment complies with the FCC RF radiation exposure limits set forth for an uncontrolled environment. This equipment should be installed and operated with the following minimum distances between the radiator and your body:

| | |
|---|---|
| LTE 700 MHz (DDR700) | 204.7 cm |
| iDEN 800MHz (DDR850) | 173.0 cm |
| PCS 1900MHz (DDR1900) | 142.9 cm |
| AWS-1 2100MHz (DDR2100) | 134.9 cm |
| AWS-3 2155MHz (DDRAWS3) | 97.7 cm |
| WCS 2300 MHz | 97.7 cm |

If system will operate on multiple bands, the separation distance required shall be equal to, or greater than, the band with the largest separation distance.

**IC RF Exposure —** Equipment operating in the Cellular band should be installed and operated with the following minimum distance of between the radiator and your body:

| | |
|---|---|
| LTE 700 MHz (DDR700) | 269.0 cm |
| iDEN 800MHz (DDR850) | 269.7 cm |
| PCS 1900MHz (DDR1900) | 197.3 cm |
| AWS-1 2100MHz (DDR2100) | 171.4 cm |
| AWS-3 2155MHz (DDRAWS3) | 138.6 cm |
| WCS 2300 MHz | 135.5 cm |
| IMT-E 2600MHz (DDR2600) | 166.1 cm |

If system will operate on multiple bands, the separation distance required shall be equal to, or greater than, the band with the largest separation distance.

The Manufacturer's rated output power of this equipment is for single carrier operation. For situations when multiple carrier signals are present, the rating would have to be reduced by 3.5 dB, especially where the output signal is re-radiated and can cause interference to adjacent band users. This power reduction is to be by means of input power or gain reduction and not by an attenuator at the output of the device.

**IC RF exposition —** FL'équipement fonctionnant dans la bande cellulaire doit être installé et utilisé avec la distance minimale suivante entre le radiateur et votre corps:

| | |
|---|---|
| LTE 700 MHz (DDR700) | 269.0 cm |
| iDEN 800MHz (DDR850) | 269.7 cm |
| PCS 1900MHz (DDR1900) | 197.3 cm |
| AWS-1 2100MHz (DDR2100) | 171.4 cm |
| AWS-3 2155MHz (DDRAWS3) | 138.6 cm |
| WCS 2300 MHz | 135.5 cm |
| IMT-E 2600MHz (DDR2600) | 166.1 cm |

Si le système fonctionne sur plusieurs bandes, la distance de séparation requise est égale ou supérieure à la bande avec la plus grande distance de séparation.

Nominale de puissance de sortie du fabricant de cet équipement est pour un fonctionnement à une seule porteuse. Pour des situations où les signaux porteurs multiples sont présents, la cote devrait être réduite de 3,5 dB, en particulier lorsque le signal de sortie est re-rayonnée et peut provoquer des interférences avec les utilisateurs de bandes adjacentes. Cette réduction de puissance est effectuée au moyen d'une puissance d'entrée ou la réduction de gain, et non par un atténuateur à la sortie du dispositif.

### Public Safety Products

*Table 24 Available Products, FCC/IC*

| System | UL Frequency MHz | DL Frequency MHz | Pout, DL, dBm (Composite) | Nominal Bandwidth MHz | Nominal Passband Gain dB | Input/ Output Impedance Ohms | Standard |
|---|---|---|---|---|---|---|---|
| VHF | 138-174 | 138-174 | 33 | 24(FCC); 36 (IC)† | 70 | 50 | FCC/IC |
| UHF | 450-512 | 450-512 | 33 | 62†† | 70 | 50 | FCC/IC |
| 700 | 793-805 | 763-775 | 33 | 12 | 70 | 50 | FCC/IC |
| 800 | 806-824 | 851-869 | 33 | 18 | 70 | 50 | FCC/IC |

† 2MHz with required external duplexers

†† 3MHz tor 1.5 MHz with required external duplexers

**Class B Industrial Booster —** This equipment is a Class B Industrial Booster and is restricted to installation as an In-building Distributed Antenna System (DAS).

**FCC RF Exposure —** This equipment complies with the FCC RF radiation exposure limits set forth for an uncontrolled environment. This equipment should be installed and operated with the following minimum distances between the radiator and your body.

| | |
|---|---|
| VHF public safety band | 69.1 cm - This distance must be maintained when a 10.5dBi antenna is used. |
| UHF public safety band | 20.0 cm |
| 700MHz public safety band | 36.2 cm - This distance must be maintained when a 5.5dBi antenna is used. |
| 800MHz public safety band | 20.0 cm |

If system will operate on multiple bands, the separation distance required shall be equal to, or greater than, the band with the largest separation distance.

**IC RF Exposure —** Equipment operating in the public safety band should be installed and operated with the following minimum distance of between the radiator and your body:

| | |
|---|---|
| VHF public safety band (DDR-V) | 261.5 cm - This distance must be maintained when a 10.5dBi antenna is used. |
| UHF public safety band (DDR-U) | 224.0 cm |
| 700MHz public safety band (DDR-F) | 187.0 cm - This distance must be maintained when a 5.5dBi antenna is used. |
| 800MHz public safety band (DDR-S) | 181.0 cm |

If system will operate on multiple bands, the separation distance required shall be equal to, or greater than, the band with the largest separation distance.

The Manufacturer's rated output power of this equipment is for single carrier operation. For situations when multiple carrier signals are present, the rating would have to be reduced by 3.5 dB, especially where the output signal is re-radiated and can cause interference to adjacent band users. This power reduction is to be by means of input power or gain reduction and not by an attenuator at the output of the device.

**IC RF exposition —** L'équipement fonctionnant dans la bande de sécurité publique doit être installé et utilisé avec la distance minimale suivante entre le radiateur et votre corps:

| | |
|---|---|
| VHF bande de sécurité publique (DDR-V) | 261.5 cm - Sa distance doit être maintenue lorsqu'une antenne de 10,5 dBi est utilisée. |
| UHF bande de sécurité publique (DDR-U) | 224.0 cm |
| 700MHz bande de sécurité publique (DDR-F) | 187.0 cm - Sa distance doit être maintenue lorsqu'une antenne de 10,5 dBi est utilisée. |
| 800MHz bande de sécurité publique (DDR-S) | 181.0 cm |

Si le système fonctionne sur plusieurs bandes, la distance de séparation requise est égale ou supérieure à la bande avec la plus grande distance de séparation.

Nominale de puissance de sortie du fabricant de cet équipement est pour un fonctionnement à une seule porteuse. Pour des situations où les signaux porteurs multiples sont présents, la cote devrait être réduite de 3,5 dB, en particulier lorsque le signal de sortie est re-rayonnée et peut provoquer des interférences avec les utilisateurs de bandes adjacentes. Cette réduction de puissance est effectuée au moyen d'une puissance d'entrée ou la réduction de gain, et non par un atténuateur à la sortie du dispositif.

## DDS

Bird's DDS series distributed high power radio head is a high performing wideband radio head equipped with a Pre Distortion power amplifier that supports all modulations. The light weight, convection cooled IP65 chassis secures the performance in almost any environment.

### FCC/IC Standard

*Table 25 General Specifications*

| | |
|---|---|
| Noise Figure, Typical | 3 dB |
| Delay excluding optical fiber | < 0.5 µs |
| Instantaneous Band Width, Max | 15 MHz |
| Power Supply<br>Standard<br>Optional | <br>85 – 264 VAC<br>-32 to -100 VDC |
| Operating Temperature | -25 to 55 °C (-13 to 131 °F) |
| Casing | IP65 |

*Table 26 Specifications DDS100 (Single Band) & DDS200 (Dual band)*

| | |
|---|---|
| Power Consumption, max, DDS100 (200) | 90 (180) W |
| Dimensions, W x D x H | 11.8 x 5.1 x 27.6 in.<br>30 x 13 x 70 cm |
| Weight | < 34 lbs (15.2 kg) |

*Table 27 Specifications DDS300 (Triple Band) & DDS400(Quad Band)*

| | |
|---|---|
| Power Consumption, max, DDS300 (400) | 270 (360) W |
| Dimensions, W x D x H | 11.8 x 8.7 x 27.6 in.<br>30 x 22 x 70 cm |
| Weight | < 60 lbs (27.2 kg) |

### Cellular Products

*Table 28 Available Products, FCC/IC*

| System | UL Frequency MHz | DL Frequency MHz | Downlink Power RMS | Standard |
|---|---|---|---|---|
| LTE LB | 698 - 716 | 728 - 746 | 41 | FCC/IC |
| LTE UB | 776 – 787† | 746 -757† | 41 | FCC/IC |
| 850 | 824 - 849 | 869 - 894 | 41 | FCC/IC |
| PCS1900 | 1850 - 1915 | 1930 - 1995 | 41 | FCC/IC |
| AWS | 1710 - 1755 | 2110 - 2155 | 41 | FCC/IC |

† Sub-bands available

**Class B Industrial Booster —** This equipment is a Class B Industrial Booster and is restricted to installation as an In-building Distributed Antenna System (DAS).

**FCC RF Exposure —** This equipment complies with the FCC RF radiation exposure limits set forth for an uncontrolled environment. This equipment should be installed and operated with the following minimum distances between the radiator and your body:

| | |
|---|---|
| LTE LB 700 MHz | 310.9 cm |
| LTE UB 700 MHz | 349 cm |
| 850MHz | 323 cm |
| PCS 1900MHz | 246 cm |
| AWS 2100MHz | 246 cm |

If system will operate on multiple bands, the separation distance required shall be equal to, or greater than, the band with the largest separation distance.

**IC RF Exposure —** Equipment operating in the Cellular band should be installed and operated with the following minimum distance of between the radiator and your body:

| | |
|---|---|
| LTE LB 700 MHz | 445.1 cm |
| LTE UB 700 MHz | 501 cm |
| 850MHz | 475 cm |
| PCS 1900MHz | 362 cm |
| AWS 2100MHz | 351 cm |

If system will operate on multiple bands, the separation distance required shall be equal to, or greater than, the band with the largest separation distance.

The Manufacturer's rated output power of this equipment is for single carrier operation. For situations when multiple carrier signals are present, the rating would have to be reduced by 3.5 dB, especially where the output signal is re-radiated and can cause interference to adjacent band users. This power reduction is to be by means of input power or gain reduction and not by an attenuator at the output of the device.

**IC RF exposition —** FL'équipement fonctionnant dans la bande cellulaire doit être installé et utilisé avec la distance minimale suivante entre le radiateur et votre corps:

| | |
|---|---|
| LTE LB 700 MHz | 445.1 cm |
| LTE UB 700 MHz | 501 cm |
| 850MHz | 475 cm |
| PCS 1900MHz | 362 cm |
| AWS 2100MHz | 351 cm |

Si le système fonctionne sur plusieurs bandes, la distance de séparation requise est égale ou supérieure à la bande avec la plus grande distance de séparation.

Nominale de puissance de sortie du fabricant de cet équipement est pour un fonctionnement à une seule porteuse. Pour des situations où les signaux porteurs multiples sont présents, la cote devrait être réduite de 3,5 dB, en particulier lorsque le signal de sortie est re-rayonnée et peut provoquer des interférences avec les utilisateurs de bandes adjacentes. Cette réduction de puissance est effectuée au moyen d'une puissance d'entrée ou la réduction de gain, et non par un atténuateur à la sortie du dispositif.

## DDH

Bird's Distributed High power radio head is a high performing wideband radio head equipped with a feed forward multi carrier power amplifier that supports all modulations. The light weight, convection cooled IP65 chassis secures the performance in almost any environment.

### ETSI standard

#### *Table 29 General Specifications*

| | |
|---|---|
| Noise Figure, Typical | 3 dB |
| Delay excluding optical fiber | < 0.5 µs |
| Power Supply<br>Standard<br>Optional | <br>85 – 264 VAC<br>-32 to -100 VDC |
| Operating Temperature | -25 to 55 °C (-13 to 131 °F) |
| Casing | IP65 |

#### *Table 30 Specifications DDH100 (Single Band)*

| | |
|---|---|
| Power Consumption, max, DDH100 | 210 W |
| Dimensions, W x D x H | 11.8 x 5.1 x 27.6 in.<br>30 x 13 x 70 cm |
| Weight | < 34 lbs (15.2 kg) |

#### *Table 31 Specifications DDH200 (Dual Band)*

| | |
|---|---|
| Power Consumption, max, DDS200 | 420 W |
| Dimensions, W x D x H | 11.8 x 8.7 x 27.6 in.<br>30 x 22 x 70 cm |
| Weight | < 60 lbs (27.2 kg) |

### Cellular Products

#### *Table 32 Available Products, ETSI*

| SYSTEM | Number of carriers | | | | | |
|---|---|---|---|---|---|---|
| | 2 | | 4 | | 8 | |
| | Composite Power | Power per carrier | Composite Power | Power per carrier | Composite Power | Power per carrier |
| TETRA | 32 | 29 | 33 | 27 | | |
| CDMA450 | 32 | 29 | 33 | 27 | | |
| GSM-R | 37 | 34 | 40 | 34 | | |
| DD 800 | 37 | 34 | 33 | 27 | | |
| EGSM900 | 40 | 34 | 40 | 34 | 40 | 31 |
| GSM1800 | 40 | 37 | 40 | 34 | 40 | 31 |
| UMTS | 43 | 40 | 43 | 37 | 43 | 34 |
| 2600 | 43 | 40 | 43 | 37 | 43 | 34 |

## FCC standards

### Table 33 General Specifications

| | |
|---|---|
| Noise Figure, Typical | 3 dB |
| Delay excluding optical fiber | < 0.5 µs |
| Instantaneous Band Width, Max | 15 MHz |
| Power Supply<br>Standard<br>Optional | <br>85 – 264 VAC<br>-32 to -100 VDC |
| Operating Temperature | -25 to 55 °C (-13 to 131 °F) |
| Casing | IP65 |

### Table 34 Specifications DDH100 (Single Band)

| | |
|---|---|
| Power Consumption, max, DDH100 | 210 W |
| Dimensions, W x D x H | 11.8 x 5.1 x 27.6 in.<br>30 x 13 x 70 cm |
| Weight | < 34 lbs (15.2 kg) |

### Table 35 Specifications DDH200 (Dual Band)

| | |
|---|---|
| Power Consumption, max, DDS200 | 420 W |
| Dimensions, W x D x H | 11.8 x 8.7 x 27.6 in.<br>30 x 22 x 70 cm |
| Weight | < 60 lbs (27.2 kg) |

### Cellular Products

### Table 36 Available Products, FCC/IC

| System | UL Frequency MHz | DL Frequency MHz | Pout, DL, dBm (RMS) | Standard |
|---|---|---|---|---|
| LTE LB | 698 - 716 | 728 - 746 | 43 | FCC/IC |
| LTE UB | 776 – 787† | 746 -757† | 43 | FCC/IC |
| iDEN | 806 - 824 | 851 - 869 | 40 | FCC/IC |
| Cellular | 824 - 849 | 869 - 894 | 43 | FCC/IC |
| PCS1900 | 1850 - 1910 | 1930 - 1990 | 43 | FCC/IC |
| AWS | 1710 - 1780 | 2110 - 2180 | 43 | FCC/IC |
| 2600 LTE | 2500 - 2570 | 2620 - 2690 | 43 | FCC/IC |

† Sub-bands available

**Note:** *All specifications subject to change without notice.*

**Class B Industrial Booster —** This equipment is a Class B Industrial Booster and is restricted to installation as an In-building Distributed Antenna System (DAS).

**Note:** *RF exposure distances are calculated using a 17 dBi antenna*

**FCC RF Exposure —** This equipment complies with the FCC RF radiation exposure limits set forth for an uncontrolled environment. This equipment should be installed and operated with the following minimum distances between the radiator and your body:

| | |
|---|---|
| 2600 LTE (DDH 2600) | 309 cm |
| AWS3 (DDHAWS3) | 309 cm |
| PCS1900 (DDH1900) | 309 cm |
| Cellular (DDH850) | 406 cm |

If system will operate on multiple bands, the separation distance required shall be equal to, or greater than, the band with the largest separation distance.

**IC RF Exposure —** Equipment operating in the Cellular band should be installed and operated with the following minimum distance of between the radiator and your body:

| | |
|---|---|
| 2600 LTE (DDH 2600) | 410.1 cm |
| AWS3 (DDHAWS3) | 438.4 cm |
| PCS1900 (DDH1900) | 455.2 cm |
| Cellular (DDH850) | 597.9 cm |

If system will operate on multiple bands, the separation distance required shall be equal to, or greater than, the band with the largest separation distance.

The Manufacturer's rated output power of this equipment is for single carrier operation. For situations when multiple carrier signals are present, the rating would have to be reduced by 3.5 dB, especially where the output signal is re-radiated and can cause interference to adjacent band users. This power reduction is to be by means of input power or gain reduction and not by an attenuator at the output of the device.

**IC RF exposition —** FL'équipement fonctionnant dans la bande cellulaire doit être installé et utilisé avec la distance minimale suivante entre le radiateur et votre corps:

| | |
|---|---|
| 2600 LTE (DDH 2600) | 410.1 cm |
| AWS3 (DDHAWS3) | 438.4 cm |
| PCS1900 (DDH1900) | 455.2 cm |
| Cellular (DDH850) | 597.9 cm |

Si le système fonctionne sur plusieurs bandes, la distance de séparation requise est égale ou supérieure à la bande avec la plus grande distance de séparation.

Nominale de puissance de sortie du fabricant de cet équipement est pour un fonctionnement à une seule porteuse. Pour des situations où les signaux porteurs multiples sont présents, la cote devrait être réduite de 3,5 dB, en particulier lorsque le signal de sortie est re-rayonnée et peut provoquer des interférences avec les utilisateurs de bandes adjacentes. Cette réduction de puissance est effectuée au moyen d'une puissance d'entrée ou la réduction de gain, et non par un atténuateur à la sortie du dispositif.

## DDU

Bird's Distributed High power radio head is a high performing wideband radio head equipped with a feed forward multi carrier power amplifier that supports all modulations. The light weight, convection cooled IP65 chassis secures the performance in almost any environment.

### FCC standards

*Table 37 General Specifications*

| | |
|---|---|
| Noise Figure, Typical | 3 dB |
| Delay excluding optical fiber | < 0.5 µs |
| Instantaneous Band Width, Max | 15 MHz |
| Power Supply<br>Standard<br>Optional | <br>85 – 264 VAC<br>-32 to -100 VDC |
| Operating Temperature | -25 to 55 °C (-13 to 131 °F) |
| Casing | IP65 |

*Table 38 Specifications DDU100 (Single Band)*

| | |
|---|---|
| Power Consumption, max, typical | 225 W |
| Dimensions, W x D x H | 11.8 x 5.1 x 27.6 in.<br>30 x 13 x 70 cm |
| Weight | < 34 lbs (15.2 kg) |

*Table 39 Specifications DDU200 (Dual Band)*

| | |
|---|---|
| Power Consumption, max, typical | 450 W |
| Dimensions, W x D x H | 11.8 x 8.7 x 27.6 in.<br>30 x 22 x 70 cm |
| Weight | < 60 lbs (27.2 kg) |

### Cellular Products

*Table 40 Available Products, FCC/IC*

| System | UL Frequency MHz | DL Frequency MHz | Pout, DL, dBm (RMS) | Standard |
|---|---|---|---|---|
| LTE LB | 698 - 716 | 728 - 746 | 46 | FCC/IC |
| LTE UB | 776 - 787 | 746 - 757 | 46 | FCC/IC |
| LTE FB | 698 - 716/776 - 787 | 728 - 757 | 46 | FCC/IC |
| Cellular | 824 - 849 | 869 - 894 | 46 | FCC/IC |
| PCS1900 | 1850 - 1910 | 1930 - 1990 | 46 | FCC/IC |
| AWS | 1710 - 1780 | 2110 - 2180 | 46 | FCC/IC |

**Note:** *All specifications subject to change without notice.*

**Class B Industrial Booster —** This equipment is a Class B Industrial Booster and is restricted to installation as an In-building Distributed Antenna System (DAS).

**FCC RF Exposure —** This equipment complies with the FCC RF radiation exposure limits set forth for an uncontrolled environment. This equipment should be installed and operated with the following minimum distances between the radiator and your body:

| | | |
|---|---|---|
| DDU-700LC | 626.6 cm | 17dBi antenna |
| DDU-700UC | 619 cm | 17dBi antenna |
| DDU-850 | 573.5 cm | 17dBi antenna |
| DDU-AWS3 (2100MHz) | 436.5 cm | 17dBi antenna |
| DDU-1900 (PCS 1900MHz) | 436.5 cm | 17dBi antenna |

If system will operate on multiple bands, the separation distance required shall be equal to, or greater than, the band with the largest separation distance.

**IC RF Exposure —** Equipment operating in the Cellular band should be installed and operated with the following minimum distance of between the radiator and your body:

| | | |
|---|---|---|
| DDU-700LC | 897.3 cm | 17dBi antenna |
| DDU-700UC | 889.8 cm | 17dBi antenna |
| DDU-850 | 884.6 cm | 17dBi antenna |
| DDU-AWS3 (2100MHz) | 643.0 cm | 17dBi antenna |
| DDU-1900 (PCS 1900MHz) | 623.8 cm | 17dBi antenna |

If system will operate on multiple bands, the separation distance required shall be equal to, or greater than, the band with the largest separation distance.

The Manufacturer's rated output power of this equipment is for single carrier operation. For situations when multiple carrier signals are present, the rating would have to be reduced by 3.5 dB, especially where the output signal is re-radiated and can cause interference to adjacent band users. This power reduction is to be by means of input power or gain reduction and not by an attenuator at the output of the device.

**IC RF exposition —** FL'équipement fonctionnant dans la bande cellulaire doit être installé et utilisé avec la distance minimale suivante entre le radiateur et votre corps:

| | | |
|---|---|---|
| DDU-700LC | 897.3 cm | 17dBi antenna |
| DDU-700UC | 889.8 cm | 17dBi antenna |
| DDU-850 | 884.6 cm | 17dBi antenna |
| DDU-AWS3 (2100MHz) | 643.0 cm | 17dBi antenna |
| DDU-1900 (PCS 1900MHz) | 623.8 cm | 17dBi antenna |

Si le système fonctionne sur plusieurs bandes, la distance de séparation requise est égale ou supérieure à la bande avec la plus grande distance de séparation.

Nominale de puissance de sortie du fabricant de cet équipement est pour un fonctionnement à une seule porteuse. Pour des situations où les signaux porteurs multiples sont présents, la cote devrait être réduite de 3,5 dB, en particulier lorsque le signal de sortie est re-rayonnée et peut provoquer des interférences avec les utilisateurs de bandes adjacentes. Cette réduction de puissance est effectuée au moyen d'une puissance d'entrée ou la réduction de gain, et non par un atténuateur à la sortie du dispositif.

## Remote Unit Frequency Summary

### *Table 41 ETSI Bands*

| Band | 3GPP Band | UL Frequency | DL Frequency | DDR Max Composite | DDH Max Composite |
|---|---|---|---|---|---|
| FM | | | 88 - 108 | 22 | - |
| TERTRA VHF | | 136 - 174 | 136 - 174 | 22 | - |
| TETRA, Public Safety | | 380-385 | 390-395 | 26 | 33 |
| TETRA, Commercial | | 410-415 | 420-425 | 26 | 33 |
| TETRA, Commercial | | 415-420 | 425-430 | 26 | 40 |
| CDMA 450 | Band 31 | 452.5-457.5 | 462.5-467.5 | 33 | 40 |
| DD800 | Band 20 | 832-862 | 791-821 | 26 | 40 |
| E-GSM 900 | Band 8 | 880-915 | 925-960 | 26 | 40 |
| GSM 1800 | Band 3 | 1710-1785 | 1805-1880 | 28 | 40 |
| UMTS | Band 1 | 1920-1980 | 2110-2170 | 30 | 43 |
| LTE 2600 | Band 7 | 2500-2570 | 2620-2690 | 30 | 43 |

### *Table 42 FCC/IC Bands*

| Band | 3GPP Band | UL Frequency | DL Frequency | DDR Max Composite | DDS Max Composite (15MHz) | DDH Max Composite | DDU Max Composite |
|---|---|---|---|---|---|---|---|
| VHF | | 136-174 | 136-174 | 33 | N/A | N/A | N/A |
| UHF | | 450-470 | 450-470 | 33 | N/A | N/A | N/A |
| 700 Lower | Band 12 | 698-716 | 728-746 | 33 | N/A | 43 | 46 |
| 700 Upper | Band 13 & 14 | 776-806 | 746-757 | 33 | N/A | 43 | 46 |
| 700 Combined | Band 12, 13 & 14 | 698-716<br>776-806 | 728-757 | 33 | 41 | 43 | 46 |
| 700 Public Safety | | 769-775 | 799-805 | 33 | - | - | N/A |
| 800 iDEN | Band 27 | 806-824 | 851-869 | 33 | 41 | 43 | N/A |
| 850 Cellular | Band 5 | 824-849 | 869-894 | 33 | 41 | 43 | 46 |
| 1900 PCS | Band 25 | 1850-1910 | 1930-1990 | 33 | 41 | 43 | 46 |
| AWS | Band 4 | 1710-1755 | 2110-2155 | 33 | 41 | 43 | 46 |
| 2600 LTE | Band 7 | 2500-2570 | 2620-2690 | 33 | N/A | 43 | N/A |

Information regarding Bird's Fiber-DAS systems are updated periodically, for the latest information on all of Bird's Fiber-DAS products visit Bird's website:

http://www.birdrf.com/Products/Coverage/Fiber-DAS.aspx

## DMU – Remote head end

Bird's DMU100 series is a compact head end that can function as a low power repeater or BTS interface. The unit can directly support up to 4 remotes or can fiber feed a Headend Master Unit. Remote access is provided by either the Bird RGW or via Ethernet connection. The unit is a rugged convection cooled, IP65 chassis designed for outdoor locations.

It is possible to build the DMU to support more than one band, however, the types of bands and the necessary duplexers for a configuration must be verified to ensure compatibility with the RGW.

***Figure 20 DMU – Remote Head End***

In Figure 21, the DMU is used to pick up the signal at a remote location and then it is transmitted on the fiber to four different locations that need coverage. The RU can be connected to coaxial spreading networks if needed.

***Figure 21 DMU Feeding Remote Units***

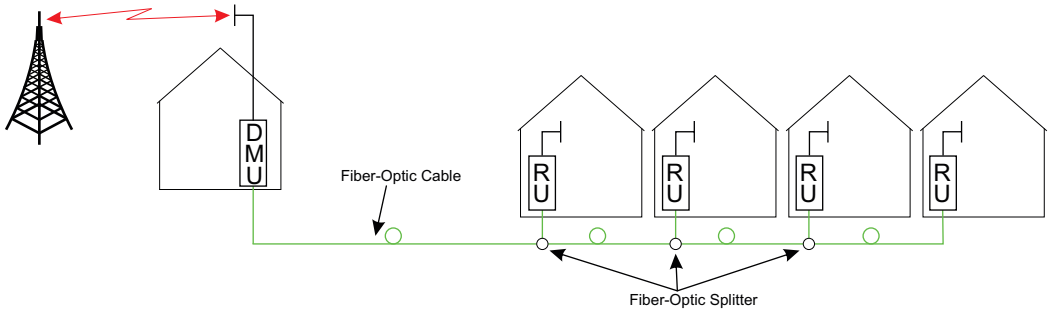


In Figure 22, the DMU is feeding a Headend Master Unit which in turn feeds the Remote Units (RU). This is a far more flexible solution and would be preferred when possible.

***Figure 22 DMU Feeding BMU***

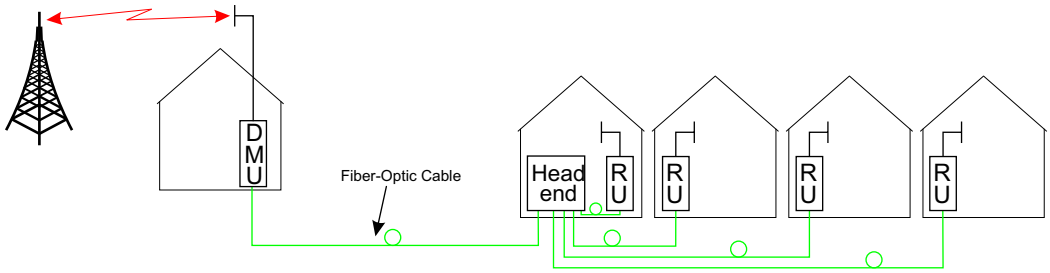


The DMU is equipped with a low power uplink amplifier. The unit should be used in a location that has adequate signal so that power level of a mobile phone will suffice.

## Repeaters

Bird Technologies offers a wide variety of repeaters to boost off air signals. The repeated signals can feed passive DAS or can be used as an input into the active DAS.

### DMR 400 Series Rack Mount Repeater

The DMR 400 is designed to fit in the Headend Master Frame along with the BIU and FOI cards. The system was originally designed to be used in moving coverage areas such as ships and trains that require active control over the downlink gain (link symmetry) to compensate for wide variations in the off-air signals, but the system can easily be implemented in traditional fixed locations such as offices and hospitals.

***Figure 23 DMR 400 Rack Mount Repeater***

Although the DMR repeaters are rack mounted with the active DAS components, the DMR repeater can function as a stand alone unit to provide coverage to a passive DAS.

The DMR repeater family offers link symmetry settings. This function is used to automatically adjust the uplink gain based on the downlink signal. When installed in moving coverage areas such as trains, the feature prevents the repeater from desensitizing the donor site by automatically controlling uplink levels.

The DMR repeater also offers self-oscillation protection. This function is used to detect problems with isolation between the donor and service antenna. The repeater will intervene and lower the gain to a level equal to the isolation minus the stability margin. The settings are separate for UL and DL.

- On/Off
- Stability margin: Value setting of how much lower the gain should be than the calculated isolation. Range of 0.0 to 20.0dBm.
- Recovery time: Time that should pass before the repeater reset the gain to the value specified level in “RF Config” (set gain). Range of 30 to 86,400 seconds.
- Recovery margin: Set value of gain level above the gain specified in “RF Config” (set gain) that is used when the repeater recovers after the “Recovery Time”. Range of 0.0 to 20.0dBm.

The DMR400 offers variable bandwidths up to 35Mhz, depending on the configuration.

Remote access can be provided via an Ethernet connection or through the Bird Remote Gateway. SNMP is a standard on the units. No proprietary software is required. Operational parameters are set via a web browser.

### Table 43 DMR400 Specifications

| | |
|---|---|
| Gain | 50-80 dBm in 1 dB steps |
| Noise Figure - Typical | < 5 dBm |
| Delay | <7 µs |
| Dimensions | 2 card slots |
| Weight (module) | 0.7 kg (1.5 lbs) |
| Operating Temperature | 0 to 40 °C (32 to 104 °F) |

### Table 44 Available Products, Cellular, FCC

| | Band | Uplink | Downlink | Pout, DL & UL | Standard |
|---|---|---|---|---|---|
| DMR405 | 700 Lower | 698 - 716 | 728 - 746 | 25 dBm | FCC |
| DMR404 | 700 Upper | 776 - 787 | 746 - 757 | 25 dBm | FCC |
| DMR407 | IDEN | 806 - 824 | 851 - 869 | 25 dBm | FCC |
| DMR408 | Cellular | 824 - 849 | 869 - 894 | 25 dBm | FCC |
| DMR419 | PCS1900 | 1850 - 1915 | 1930 - 1995 | 25 dBm | FCC |
| DMR420 | AWS | 1710 - 1755 | 2110 - 2155 | 25 dBm | FCC |

### Table 45 Available Products, Cellular, ETSI

| | Band | Uplink | Downlink | Pout, DL & UL | Standard |
|---|---|---|---|---|---|
| DMR401 | TETRA, Public Safety | 380 - 385 | 390 - 395 | 19 dBm | ETSI |
| DMR402 | TETRA, Commercial | 410 - 415 | 420 - 425 | 19 dBm | ETSI |
| DMR403 | TETRA, Commercial | 415 - 420 | 425 - 430 | 19 dBm | ETSI |
| DMR411 | CDMA450 | 458 - 460 | 468 - 4670 | 25 dBm | FCC |
| DMR410 | GSM-R | 876 - 880 | 921 - 925 | 19 dBm | ETSI |
| DMR409 | EGSM900 | 880 - 915 | 925 - 960 | 19 dBm | ETSI |
| DMR418 | GSM1800 | 1710 - 1775 | 1805 - 1880 | 19 dBm | ETSI |
| DMR421 | UMTS 2100 | 1920 - 1980 | 2110 - 2170 | 23 (DL)/20 (UL) | 3GPP |

## DLR 600 Series Low Power Repeater

The DLR 600 low power repeater is designed for environments where low signal levels are required. Although small, the unit still offers Bird's feature rich functions such as self-oscillation protection, fast AGC, link symmetry functionality, SNMP and remote access via Ethernet or the Bird Remote Gateway.

### *Figure 24 DLR 600 Low Power Repeater*

### *Table 46 DLR600 Specifications*

| | |
|---|---|
| Gain | 40-70 dBm in 1 dB steps |
| Noise Figure | <5 dB |
| Delay | <7 µs |
| Power Supply<br>Standard<br>optional | <br>100 to 240 VAC<br>12 to 28 VDC |
| Dimension (W x D x H) | 30 x 5 x 21 cm (11.8x2x8.3 inches) |
| Weight | <1.4 Kg (3.1 lbs) |
| Operating Temp (DC) | -25 to 55 °C (13 to 131 °F) |
| Operating Temp (AC) | 0 to +40 °C (+32 to +104 °F) |
| Casing | IP42 |
| Bandwidth | 0-25 MHz |
| Connectors | SMA or N-type |

### *Table 47 Available Products, Cellular, FCC*

| | Band | Uplink | Downlink | Pout, DL & UL | Standard |
|---|---|---|---|---|---|
| DLR607 | iDEN | 806-824 | 851-869 | 16 dBm | FCC |
| DLR608 | Cellular | 824-849 | 869-894 | 16 dBm | FCC |
| DLR619 | PCS1900 | 1850-1915 | 1930-1995 | 16dBm | FCC |
| DLR620 | AWS | 1710-1755 | 2110-2155 | 16 dBm | FCC |

### *Table 48 Available Products, Cellular, ETSI*

| | Band | Uplink | Downlink | Pout, DL & UL | Standard |
|---|---|---|---|---|---|
| DLR609 | EGSM900 | 880-915 | 925-960 | 13 dBm | ETSI |
| DLR618 | GSM1800 | 1710-1775 | 1805-1880 | 13 dBm | ETSI |
| DLR621 | UMTS 2100 | 1920-1980 | 2110-2170 | 15 dBm | 3GPP |

## DMR600 Series Medium Power Repeater

The DMR 600 is a medium power repeater with band selective capabilities. Although small, the unit still offers Bird's feature rich functions such as self-oscillation protection, fast AGC, link symmetry functionality, SNMP and remote access via Ethernet or the Bird Remote Gateway

### *Figure 25 DMR 600 Medium Power Repeater*

### *Table 49 DMR600 Specifications*

| | |
|---|---|
| Gain | 50-80 dBm in 1 dB steps |
| Noise Figure | <5 dB |
| Delay | <7 µs |
| Power Supply<br>Standard<br>optional | <br>100 to 240 VAC<br>12 to 30 VDC |
| Dimension (W x D x H) | 30 x 5 x 21 cm (11.8x2x8.3 inches) |
| Weight | <1.4 Kg (3.1 lbs) |
| Operating Temp (DC) | -25 to 55 °C (13 to 131 °F) |
| Operating Temp (AC) | 0 to +40 °C (+32 to +104 °F) |
| Casing | IP42 |
| Bandwidth | 25 MHz |
| Connectors | SMA or N-type |

### *Table 50 Available Products, Cellular, FCC*

| | Band | Uplink | Downlink | Pout, DL & UL | Standard |
|---|---|---|---|---|---|
| DMR607 | iDEN | 806-824 | 851-869 | 25 dBm | FCC |
| DMR608 | Cellular | 824-849 | 869-894 | 25 dBm | FCC |
| DMR619 | PCS1900 | 1850-1915 | 1930-1995 | 25 dBm | FCC |
| DMR620 | AWS | 1710-1755 | 2110-2155 | 25 dBm | FCC |

### *Table 51 Available Products, Cellular, ETSI*

| | Band | Uplink | Downlink | Pout, DL & UL | Standard |
|---|---|---|---|---|---|
| DMR604 | CDM450 | 453-457.5 | 463-467.5 | 25 dBm | FCC |
| DMR610 | GSM-R | 876-880 | 921-925 | 19 dBm | ETSI |
| DMR609 | EGSM900 | 880-915 | 925-960 | 19 dBm | ETSI |
| DMR618 | GSM1800 | 1710-1775 | 1805-1880 | 19 dBm | ETSI |
| DMR621 | UMTS 2100 | 1920-1980 | 2110-2170 | 23 (DL)/20 (UL) | 3GPP |

## DMR 800Series Medium Power Repeater

DMR800 repeater platform with medium power band selective repeaters is designed for a small form factor, high performance and a long lifetime. It can be used for coverage enhancement in up to medium sized indoor environments.

### Figure 26 DMR 800Series Medium Power Repeater

### Table 52 DMR800 Specifications

| | |
|---|---|
| Gain | 50-88 dBm in 1 dB steps |
| Noise Figure | <5 dB |
| Delay | <7 µs |
| Power Supply | 85 to 264 VAC |
| Power Consumption | <35 W |
| Dimension (WxDxH) | 30 x 13 x 70 cm (11.8 x 5.1 x 27.6 inches) |
| Weight | <12 kg (26.4 lbs) |
| Operating Temp | -25 to 55 °C (13 to 131 °F) |
| Casing | IP65 |
| Bandwidth | 35 MHz |
| Connectors | N-type or DIN 7/16 |

### Table 53 Available Products, Cellular, FCC

| | Band | Uplink | Downlink | Pout, DL & UL | Standard |
|---|---|---|---|---|---|
| DMR805 | 700 Lower | 698 - 716 | 728 - 746 | 25 | FCC |
| DMR804 | 700 upper | 777 - 787 | 746 - 756 | 25 | FCC |
| DMR808 | Cellular | 824 - 849 | 869 - 894 | 25 | FCC |
| DMR819 | PCS1900 | 1850 - 1915 | 1930 - 1995 | 25 | FCC |
| DMR820 | AWS | 1710 - 1755 | 2110 - 2155 | 25 | FCC |

### Table 54 Available Products, Cellular, ETSI

| | Band | Uplink | Downlink | Pout, DL & UL | Standard |
|---|---|---|---|---|---|
| DMR806 | DAB | | 174 - 240 | 18 | ETSI |
| DMR801 | TETRA, Public Safety | 380-385 | 390-395 | 19 | ETSI |
| DMR802 | TETRA, Commercial | 410-415 | 420-425 | 19 | ETSI |
| DMR803 | TETRA, Commercial | 415-420 | 425-430 | 19 | ETSI |
| DMR811 | CDMA450 | 458-460 | 468-470 | 25 | FCC |
| DMR810 | GSM-R | 876-880 | 921-925 | 19 | ETSI |
| DMR809 | EGSM900 | 880-915 | 925-960 | 19 | ETSI |
| DMR818 | GSM1800 | 1710-1775 | 1805-1880 | 19 | ETSI |
| DMR821 | UMTS 2100 | 1920-1980 | 2110-2170 | 23(DL)/20(UL) | 3GPP |

## DHR 800 Series High Power Repeater

The DHR 800 offers a high power solution in a light weight, convection cooled IP65 chassis. The unit offers Bird's feature rich functions such as self-oscillation protection, fast AGC, link symmetry functionality, SNMP and remote access via Ethernet or the Bird Remote Gateway all in a rugged IP65 chassis.

*Figure 27 DHR 800 Series High Power Repeater*

The DHR repeater family offers link symmetry settings. This function is used to automatically adjust the uplink gain based on the downlink signal. When installed in moving coverage areas such as trains, the feature prevents the repeater from desensitizing the donor site by automatically controlling uplink levels.

The DHR repeater also offers self-oscillation protection. This function is used to detect problems with isolation between the donor and service antenna. The repeater will intervene and lower the gain to a level equal to the isolation minus the stability margin. The settings are separate for UL and DL.

- On/Off
- Stability margin: Value setting of how much lower the gain should be than the calculated isolation. Range of 0.0 to 20.0dBm.
- Recovery time: Time that should pass before the repeater reset the gain to the value specified level in “RF Config” (set gain). Range of 30 to 86,400 seconds.
- Recovery margin: Set value of gain level above the gain specified in “RF Config” (set gain) that is used when the repeater recovers after the “Recovery Time”. Range of 0.0 to 20.0dBm.

*Table 55 DHR800 Specifications*

| | |
|---|---|
| Gain | 50-88 dBm in 1 dB steps |
| Noise Figure | <5 dB |
| Delay | <7 µs |
| Power Supply | 85 to 264 VAC |
| Power Consumption | <130 W |
| Dimension (WxDxH) | 30 x 13 x 70 cm (11.8 x 5.1 x 27.6 inches) |
| Weight | <12 kg (26.4 lbs) |
| Operating Temp | -25 to 55 °C (13 to 131 °F) |
| Casing | IP65 |
| Bandwidth | 35 MHz |
| Connectors | N-type or DIN 7/16 |

### *Table 56 Available Products, Cellular, FCC*

| | Band | Uplink | Downlink | Pout, DL & UL | Standard |
|---|---|---|---|---|---|
| DHR807 | iDEN | 806-824 | 851-869 | 33(DL)/25(UL) | FCC |
| DHR808 | Cellular | 824-849 | 869-894 | 33(DL)/25(UL) | FCC |
| DHR819 | PCS1900 | 1850-1915 | 1930-1995 | 33(DL)/25(UL) | FCC |
| DHR820 | AWS | 1710-1755 | 2110-2155 | 33(DL)/25(UL) | FCC |

### *Table 57 Available Products, Cellular, ETSI*

| | Band | Uplink | Downlink | Pout, DL & UL | Standard |
|---|---|---|---|---|---|
| DHR801 | TETRA, Public Safety | 380-385 | 390-395 | 26(DL)/20(UL) | ETSI |
| DHR802 | TETRA, Commercial | 410-415 | 420-425 | 26(DL)/20(UL) | ETSI |
| DHR803 | TETRA, Commercial | 415-420 | 425-430 | 26(DL)/20(UL) | ETSI |
| DHR804 | CDMA450 | 453-457.5 | 463-467.5 | 33(DL)/25(UL) | FCC |
| DHR810 | GSM-R | 876-880 | 921-925 | 26(DL)/19(UL) | ETSI |
| DHR809 | EGSM900 | 880-915 | 925-960 | 26(DL)/19(UL) | ETSI |
| DHR818 | GSM1800 | 1710-1775 | 1805-1880 | 28(DL)/21(UL) | ETSI |
| DHR821 | UMTS 2100 | 1920-1980 | 2110-2170 | 30(DL)/21(UL) | 3GPP |

## Bird Repeater Frequency Summary

### *Table 58 ETSI Bands*

| | UL Frequency | DL Frequency | DMR 400 | DLR 600 | DMR 600 | DHR 800 |
|---|---|---|---|---|---|---|
| TETRA Public Safety | 380-385 | 390-395 | ✓ | | | ✓ |
| TETRA, Commercial | 410-415 | 420-425 | ✓ | | | ✓ |
| TETRA, Commercial | 415-420 | 425-430 | ✓ | | | ✓ |
| CDMA 450 | 458-460 | 468-470 | ✓ | | ✓ | ✓ |
| GSM-R | 876-880 | 921-925 | ✓ | | ✓ | ✓ |
| EGSM900 | 880-915 | 925-960 | ✓ | ✓ | ✓ | ✓ |
| GSM 1800 | 1710-1775 | 1805-1880 | ✓ | ✓ | ✓ | ✓ |
| UMTS | 1920-1980 | 2110-2170 | ✓ | ✓ | ✓ | ✓ |

### *Table 59 FCC Bands*

| | UL Frequency | DL Frequency | DMR 400 | DLR 600 | DMR 600 | DHR 800 |
|---|---|---|---|---|---|---|
| Public Safety 800 | 806-824 | 851-869 | ✓ | ✓ | ✓ | ✓ |
| Cellular 850 | 824-849 | 869-894 | ✓ | ✓ | ✓ | ✓ |
| PCS 1900 | 1850-1915 | 1930-1995 | ✓ | ✓ | ✓ | ✓ |
| AWS | 1710-1755 | 2110-2155 | ✓ | ✓ | ✓ | ✓ |

**WARNING**
This is NOT a consumer device.
It is designed for installation by **FCC LICENSEES** and **QUALIFIED INSTALLERS.** You **MUST** have an **FCC LICENSE** or express consent of an FCC licensee to operate this device. You MUST register Class B signal boosters (as defined in 47 CFR 90.219) online at www.fcc.gov/signal-boosters/registration. Unauthorized use may result in significant forfeiture penalties, including penalties in excess of $100,000 for each continuing violation.

For CMRS 817-824MHz Applications and American Cellular Applications:

**WARNING**
This is NOT a consumer device.
It is designed for installation by **FCC LICENSEES** and **QUALIFIED INSTALLERS.** You **MUST** have an **FCC LICENSE** or express consent of an FCC licensee to operate this device. Unauthorized use may result in significant forfeiture penalties, including penalties in excess of $100,000 for each continuing violation.

This device complies with part 15 of the FCC rules. Operation is subject to the following two conditions: (1) This device may not cause harmful interference and (2) this device must accept any interference received, including interference that may cause undesired operation.

For installations subject to Industry Canada certification:

**WARNING**
This is NOT a consumer device.
It is designed for installation by an installer approved by an ISED licensee.
You MUST have an ISED LICENCE or the express consent of an ISED licensee to operate this device.

## Health and Safety

Bird DAS system is an advanced system and should be handled by skilled staff. Bird is happy to offer training of installation service providers in the case this is necessary.

Read all available documentation and warnings before handling the equipment. Equipment failures due to improper handling are normally not covered by the product warranty.

Respect all warning signs on the equipment and in the documentation. Make sure to only operate the equipment on frequencies allowed to use. Do not modify the equipment.

**WARNING**
Avoid looking into connected fibers and receptacles.
The laser used in this system is a Class 3b laser that produces invisible infra-red coherent light. Not safe to view with optical instruments. Always put the protection caps on unused fibers and receptacles.

The equipment contains a Class 3B laser and the equipment is Class 1. Do never look into the Laser beam directly or indirectly, it is strong invisible light and may cause serious damage to human eyes.

Always use protective caps on fiber and connector ends when fiber is removed from socket. Always clean socket and connector after a fiber has been removed before it is reconnected.

Make sure to keep passwords and other operational information away from unauthorized personnel.

## Cable Routing/Antenna Selection

Ensure all cables, e.g. power cable, fiber-optic cable, Antenna cables are routed and secured in accordance with local/national requirements while avoiding damage to the cables.

Antennas and coax cables are selected as part of the DAS system design and may vary with location, frequency, and power level requirements.

Use only authorized and approved antennas, cables and/or coupling devices. The use of unapproved antennas, cables or coupling devices could cause damage and may be of violation of FCC regulations.

Each individual antenna used with the DAS must be installed to provide the separation distance as specified in the RF exposure requirements (refer to specific Remote Unit RF Exposure limits in the system description section).

**CAUTION**

Unauthorized antennas, cables, and/or coupling devices may cause non-conformity with national or international regulations, could cause damage, or non-conforming ERP/EIRP.

### Antenna Installation

The Bird Fiber DAS systems do not include remote or head end antenna. The remote end antenna must be selected during system design, the antenna manufacturer's data will be required when calculating link budgets.

Antenna installation instructions are provided by the antenna manufacturer.

External donor antennas that are most commonly used in combination with DDR or DDH Remote Unit family for outdoor environment are 17 dBi gain antennas.

## Safety and Care for Fibers

**WARNING**

Avoid looking into connected fibers and receptacles.

The laser used in this system is a Class 3b laser that produces invisible infra-red coherent light. Not safe to view with optical instruments. Always put the protection caps on unused fibers and receptacles.

Every time a fiber is disconnected and re-connected care should be taken to avoid getting dust on the connector or in the receptacle. Clean with a dry fiber cleaning tool before reconnecting the fiber at all times. A single speck of dust can severely impact the transmission. Do not touch the fiber ends with your fingers. That will leave grease on the connectors and may cause severe problems.

## Tools and Material Requirements

### Fiber Optics

All fiber optic cables, including patch cords, must be SINGLE MODE. Multi-mode fiber is not supported.

Bird equipment is designed to be used with only SC/APC fiber connectors. All connection points in the fiber must either be fusion spliced or equipped with APC connectors. UPC connectors anywhere in the fiber path will cause degradation in the performance of the equipment. APC connectors can be identified by their green jacket.

- Total optical loss must be < 15dBo.
- Optical return loss -60 dB or greater.

Fiber panel inserts/couplings must be APC.

### Tools

- Fiber Optic cleaner for SC/APC connectors
- T8 Torx bit for card cage modules
- Appropriate bit for rack screws
- Spectrum analyzer with RF power meter
- Appropriate jumper cables to connect spectrum analyzer to Bird equipment
- OTDR
- Optical power meter
- Optical visual fault finder
- Fiber splicer
- SMA torque wrench calibrate to 0.9 N-m
- ESD Strap - (Electrostatic Discharge): The BIU, FOI and Power Supplies contain highly sensitive components that can be destroyed by static.

NEVER open cards, BGW, CGW, repeaters or remotes!

### Miscellaneous Material

- AC power cord(s) if using the DPU-301 power supply [AC to DC power supply]
- 18 AWG power wire if using the DPU-302 power supply [DC to DC power supply]
- Ferrite bead filter for the DC supply cable to the DPU-302. The ferrite bead filter must be installed close to the DPU-302. Follow manufacturer recommendations for proper installation of the ferrite bead filter.

## Installing Headend Equipment

All equipment must be properly grounded. Ground peg in the main connector for both head-end gear (Master Unit) and remote gear (Remote Units) must be connected to Phase, Neutral and Ground in a proper way before power is connected.

The chassis of the remote and the rack of the master unit should be grounded to a potential bar or safety grounding bar when operated. All electrical installations should be done by a certified electrician only.

### BGW

The BGW is designed to be installed in a 19" rack.

- The BGW is typically mounted near the top of the rack.
- Connect power to an available NEMA5-15R receptacle.
- Using installer provided Ethernet cable, connect the “Ext” port to the appropriate back-haul connection. The back-haul connection can be DSL, off air modem, LAN, WAN. See BGW set up instructions.

***Figure 28 BGW Installation, Ethernet Connections***

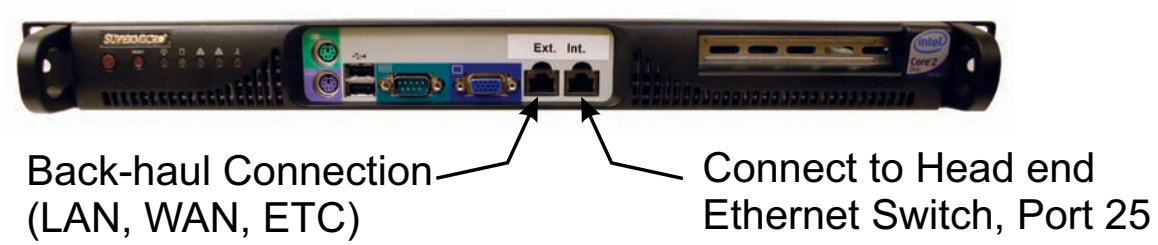


### Ethernet Switch

The Ethernet switch, ETH, is designed to be installed in a 19" rack.

- Placement is typically between the BGW and the Master Frame Unit. Placement consideration should include proper routing of Ethernet cables and the installation of additional cables after the initial installation is complete. Mounting may with Ethernet ports to the front or rear of the rack.
- Connect power to an available NEMA5-15R receptacle.
- Using installer provided Ethernet cable, connect port 25 of the Ethernet switch to the “INT” port on the BGW.

***Figure 29 Ethernet Switch***

## Master Unit

The Master Unit is designed to be installed in a 19" rack.

- Before installing, consider cable routing for all cards to be installed in the Master Unit. The installer may want to consider horizontal cable managers to be mounted above and below the Master Unit to aid in the installation and ongoing maintenance of the system.
- Each card in the Master Unit will require an Ethernet connection to the BGW in order to be programmed and monitored. Install contractor provided Ethernet cable between the appropriate Ethernet port and the Ethernet switch.

  **Note:** *The port number on the Master Unit is in reverse order on the back of the Master Unit.*

### *Figure 30 Ethernet Port Numbering, Front and Rear Views*

- Only the active port on the Master Unit requires an Ethernet connection.

  **Example:** The wide BIU uses two slots in the Master Unit. If installed in slots #1 and #2, only slot #1 will make physical connection to the backplane. Install an Ethernet cable on the back of the Master Unit in port #1 to provide the BIU with BGW connectivity.

  **Note:** *It is recommended Ethernet cables be installed on all ports. In the event of future configuration changes this will ensure BGW connectivity regardless of slot changes.*

- All open slots on the Master Unit require a blank cover plate to allow for proper air circulation. Blank plates must be ordered separately.

### *Table 60 Available Blank Cover Plates*

| Part Number | Slots Covered |
|---|---|
| DBP101 | 1 Slot |
| DBP102 | 2 Slots |
| DBP104 | 4 Slots |

## Power Supply Unit

Bird Technologies offers two different power supplies for the Master Unit: AC (DPU-301) and DC (DPU-302). The power supply can be located in a Master Unit other than the one it is powering. Each power supply is shipped with one Molex power supply jumper. If redundant power supplies are required additional power supply jumper(s) will need to be ordered.

The power supply uses four slots on the Master Unit.

- Prior to installing the PSU in the Master Unit chassis the red slide rails must be carefully removed from the slots that the PSU will occupy.

### *Figure 31 Slide Rail Removal*

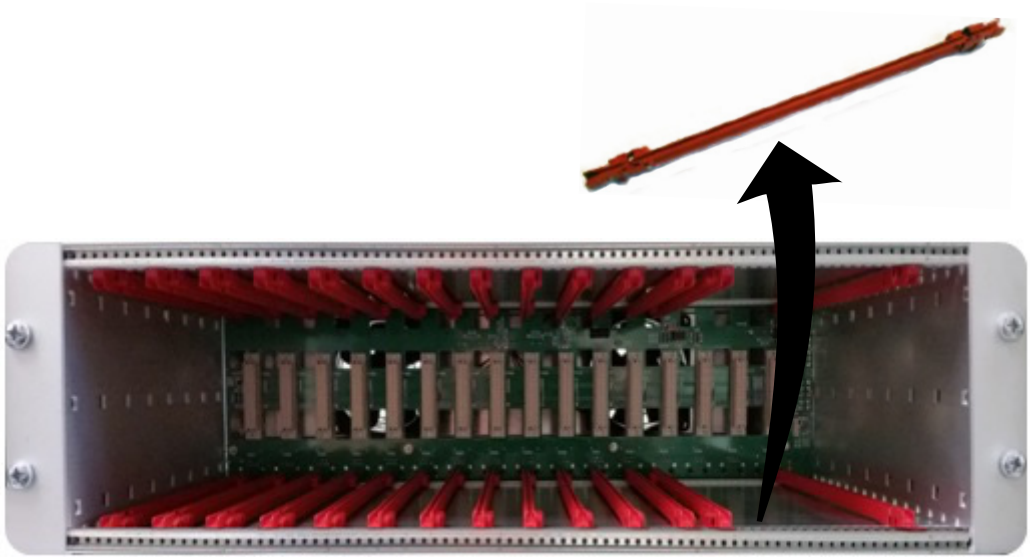

### PSU DPU-301

The AC DPU-301 power supply has a standard C13 receptacle.

- The AC DPU-301 has an input range from 86-264 VAC at 50 or 60 Hz.
- Due to site-specific needs on length and varying standards of AC plug types, the AC power cord does not ship with the equipment. The installation contractor must provide the AC power cord.

The DPU-301 can support a single, fully loaded Master Frame Unit with up to 16 cards (BIU, FOI, ICU). The cards may be all of one type or a mixture of types.

### *Figure 32 Power Supply Units*

### PSU DPU-302

The DPU-302 uses a HAN four prong Heavy Duty Power Connector.

- The DC to DC DPU-302 power supply has in input rating of -36 VDC to -72 VDC.
- The DPU-302 requires the installer to provide 18 AWG wire for the HAN 3 A plug kit (Harting P/N 10 20 003 0002) that is provided with the power supply. See Table 61 for connector pinout.

The DC power supply can support a single Master Frame Unit with up to 12 cards (BIU, FOI, ICU). The cards may be all of one type or a mixture of cards.

## *Table 61 DPU-302 Connector Pinout*

| Han 3A Pinout | |
|---|---|
| Pin #1 | (+) Positive |
| Pin #2 | Not connected |
| Pin #3 | (-) Negative |
| Pin #4 | Earth/Ground |

### Primary Power Configuration

Connect the output of the power supply to the input of the Master Unit.

- Use P101 on the Master Unit as the main power supply feed. See Figure 33.

**Note:** *Note that although there are two output connections on the front of the PSU, the PSU can only power one Master Frame at a time.*

## *Figure 33 Primary Power Configuration*

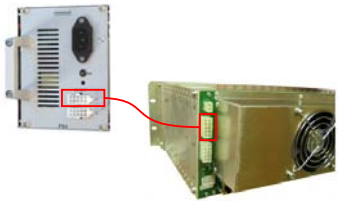

Primary Power for One Master Unit

### Backup Power Configuration

It is not required to use a backup/redundant power supply, but if the primary PSU fails a backup PSU will allow the unit to continue operating without causing an outage.

The system designer may elect to have a single, redundant PSU act as a backup to two different Master Units simultaneously with the understanding that if the main PSU for each Master Unit fails during the same time period that the backup/redundant PSU can't support both Master Units.

- Use P102 on the Master Unit for a backup/redundant power supply. See Figure 34 on page 48.

## *Figure 34 Backup Power Configuration*

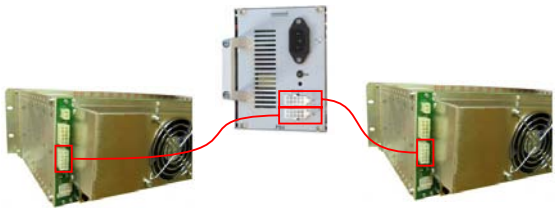

Backup Power for Two Master Units

## BIU

**CAUTION**
Overdriving the RF source input into the BIU will cause permanent equipment failure and will void the warranty. The installer must ensure that input levels are not exceeded. Plan for maximum power out of the RF source and attenuate accordingly with external attenuators if needed.

The BIU serves as the RF interface between the RF source and the ICU/FOI. Each BIU is pre-set to a frequency band and is not field tunable.

The BIU has two sets of RF source connections. The units can accept two independent feeds (within the same band). The feeds can be from separate sources or A and B paths in a MIMO configuration.

Due to the high level of RF coming into BIU, use only quality RF cables.

| BIU Type | Minimum DL Input | Maximum DL Input |
|---|---|---|
| Low Level | -7dBm | +7dBm |
| High Level | +20dBm | +33dBm |

### *Figure 35 BIU Connections*

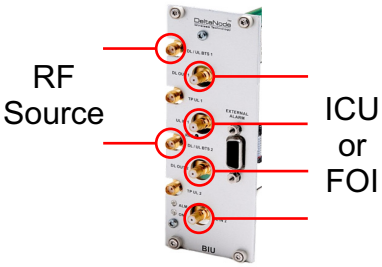


- Install the BIU in the Master Unit (wide BIU uses two slots, slim BIU uses one slot).

**CAUTION**
When mating RF connectors, ensure that they are properly aligned and not cross threaded.
Tighten SMA connectors to 8 in.-lbs (0.9 N-m).
Do over torque RF connectors, this could result in damage to the Unit.
Do not under torque RF connectors, this could result in poor signal transmission.

**Note:** *The UL1 and UL2 uplink test ports are 3dB lower than the signal on the corresponding DL/UL BTS port.*

- Connect SMA to the RF source. Tighten to 8 in-pounds (0.9 N-m) with a calibrated torque wrench.
- Connect QMA to the ICU/FOI.

**CAUTION**
Excess tension on the cable or connectors may cause PIM issues.
Cables must be secured in the rack without applying tension to the connectors.

## ICU

The ICU is designed to be installed in a 19" rack.

- The ICU is typically installed directly above or below the Master Unit chassis. Consider post installation changes and testing when selecting a slot to install the ICU.

### Figure 36 ICU

The ICU has QMA connectors. QMA cable kit - Bird part number DCC320 is available for use with the ICU. The kit contains 32 QMA to QMA cables (see Table 62) that can be used to patch between the BIU to the ICU, BIU to the FOI or ICU to FOI.

### Table 62 QMA Cable Kit

| Length | Quantity |
|---|---|
| 250 mm (9.8”) | 13 |
| 350 mm (13.8”) | 13 |
| 500 mm (19.7”) | 6 |

The ICU is configured with two identical paths - uplink and downlink. The typical configuration [DIU301 (88MHz to 2700MHz)] is four 1:8 splitters/combiners (two for UL and two for DL). Note that the theoretical loss for each DIU301 is 35dBm.

## FOI

The FOI is mounted in the Master Unit chassis (FOI DOI401 uses two slots, FOI DO301/302 uses one slot).

- The RF connections are QMA.
- The fiber connections are SC/APC.

The FOI can be ordered with an optional DCC330 jumper kit. The kit contains two SC/APC jumpers that are 5 meters (16.4 feet) in length.

### Figure 37 FOI Connections

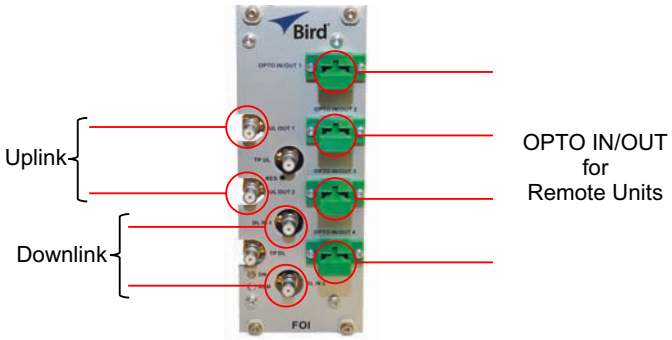

## RFU

The integrated repeater unit, RFU, DMR400 is mounted in the Master Unit chassis. The DMR400 uses two slots in the Master Unit.

### Figure 38 RFU Connections

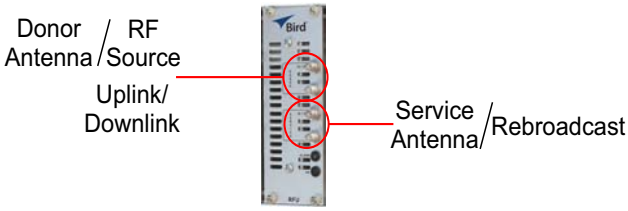


## Powering Up the Head End

1. Apply power to the BGW by pressing the power button on the left side of the unit.
   The BGW requires approximately 5 minutes to completely boot up. During the BGW boot process, the modules in the Master Unit will flash Red and Green.
2. Apply power to the Ethernet Switch and the Master Unit.
3. Verify BGW boot cycle is complete,

   **Note:** *The BGW will have green LED's lit even when powered off. This is part of the LAN wake up feature. When the BGW is running there will be three LED's lit and the hard drive icon showing activity.*
4. See Table 63 for the LED alarm codes for the modules in the Master Unit.
   After the BGW boot process is complete, all modules in the Master Unit should have some LED indication. If not, see Table 64.

### Table 63 Master Unit Module LED Indicators

| Status | LED Indication |
|---|---|
| Normal | Green - slow flash |
| Incoming Alarm | Solid Red - Limited to 5 seconds |
| Warning | Red LED flashes 1 Hz 1/8 duty cycle |
| Error | Red LED flashes 2Hz ¼ duty cycle |
| Critical | Red LED remains solid |

### Table 64 Master Unit Troubleshooting

| Malfunction | Corrective Action |
|---|---|
| **If no modules have LED indications** | Check Power cable to PSU. |
| | Check power source for Master Unit. |
| | Check connection from PSU to Chassis. |
| **If a module does not have LED ON Indicator** | Verify the module is properly seated into the chassis. |
| | Move a module to another slot on the Master Unit chassis. |
| | Replace module. |

## Installing Remote Units

The remote units are factory configured and should not be opened in the field.

**WARNING**
The Remote Units are heavy , use care and always properly support units during installation. If allowed to fall Remote Units can cause injury or death.

**CAUTION**
Ensure the surfaces being used to mount Remote Units can safely support the full weight of the remote.

The remotes must be mounted in a vertical position. There are two recommended methods for Remote Unit installation, wall mounting or pole mounting. Regardless of the mounting style selected, the remotes must be mounted so that airflow over the external heat sink is not obstructed.

### Single Remote Unit Wall Mounting

The remotes are shipped with standard wall mounting brackets. These brackets can be used indoors and outdoors.

- Mount the bracket (p/n DMB301) without the remote attached.

  **Note:** Always check local building codes for proper mounting techniques!

- Once the bracket is properly mounted, the remote easily slides into the mount. See Figure 39.

  **Note:** ***Figure 39 Remote Wall Mount***

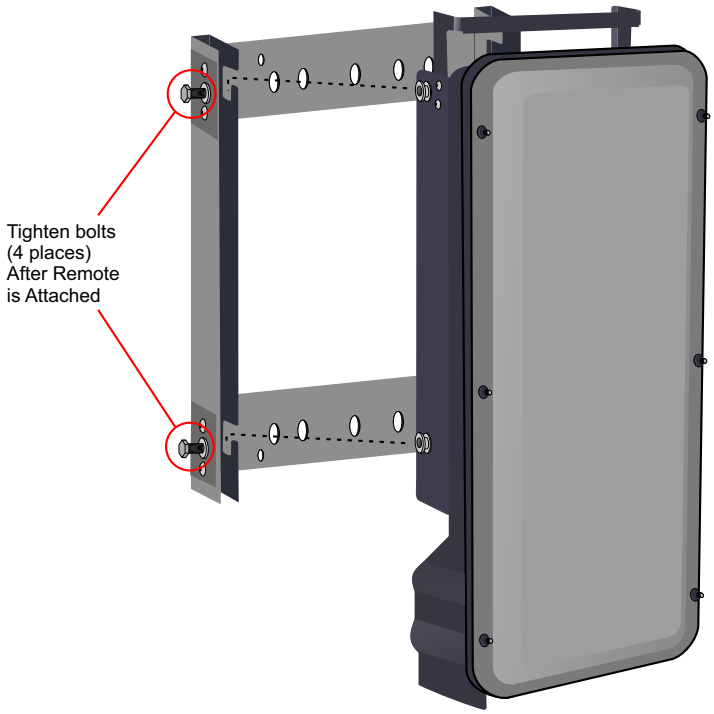


- Once the remote is attached to the wall mount, the remote must be properly secured to the mount by tightening bolts at each mounting point.

## Double Remote Unit Wall Mounting

Bird Technologies offers a bracket that allows two wall mount racks to be mounted back to back. This reduces the amount of wall space required when two remotes are located together. The bracket is stainless steel and can be used indoors or outdoors.

### *Figure 40 Double Wall Mounting Bracket*

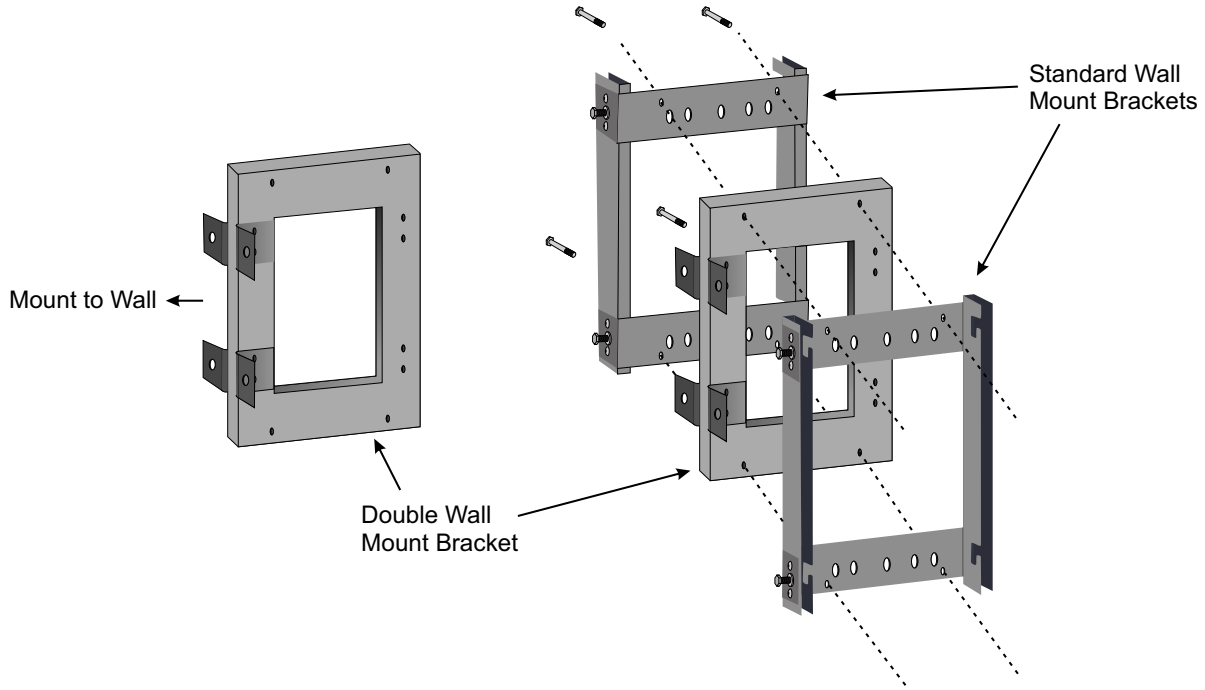


## Remote Unit Pole Mounting

Bird Technologies also offers a pole mounting option. The pole mount brackets are designed to be used with the Double Remote Wall Mount bracket.

### *Figure 41 Remote Unit Pole Mounting Option*

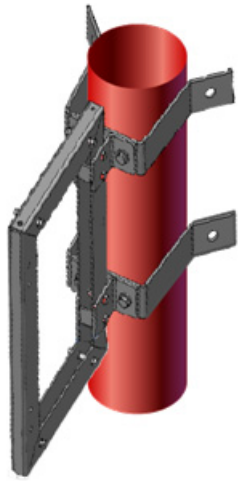

## Solar Shield

Direct exposure to sun light can cause temperatures of the remote to exceed the 55 °C (131°F) rating. A simple solution offered by Bird is to attach an optional solar shield to the affected remotes. The solar shields (p/n DMA301) are sold separately.

### *Figure 42 Remote Unit Solar Shield*

## Cabling

There are many options for the Bird remotes which can affect the number of connections on the bottom of each remote. The standard connections are:

- Ethernet port
- RF Port (N, mini DIN or 7/16 DIN, Simplex or Duplex) - Number of ports varies
- Power (AC)
- External alarm port
- Grounding
- Fiber Optic

### *Figure 43 Remote Unit Cabling Connectors*

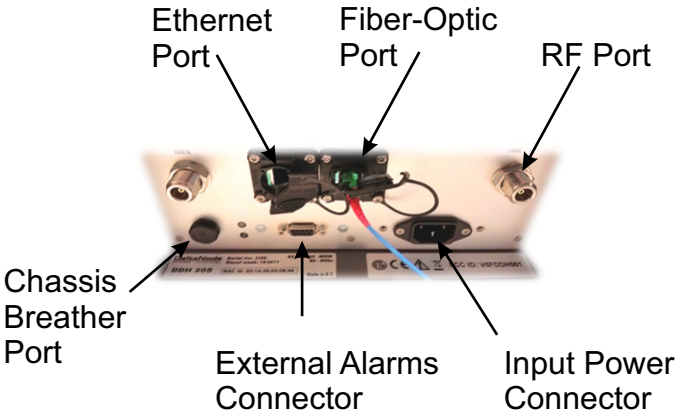

### Ethernet Port

The RJ45 Ethernet port is located on the bottom panel of the remote unit. Connection of the Ethernet port is not required for normal operation of the DAS. The port offers convenient access to the system GUI during installation, commissioning and troubleshooting of the DAS. Ensure the provided IP67 rated protective cap is replaced when the Ethernet port is not in use.

If the Ethernet connection is to be long term or permanent, ensure that the appropriate Ethernet patch cable is utilized to prevent the ingress of moisture into the port.

The Ethernet port allows for two types of connections.

1. Remote unit is not connected to the FOI in the Master Unit
   - Access will be limited to the Remote Unit. User may change setting on the Remote Unit.
   - Static IP address for local access is https://169.254.48.1
     - ✓ Username: "extended"
     - ✓ Password: "admin"
2. Remote Unit is actively connected to the FOI in the Master Unit
   - Full access to all GUI features will be allowed
   - Access will require the Master Unit IP address: https://172.22.0.1
     - ✓ Username: "extended"
     - ✓ Password: "admin"

### Fiber Optic Connection

The fiber connection on the bottom of the remote has an IP67 rated protective cap. The protective cap must remain in place until the fiber is to be inserted. This will help prevent foreign particles from degrading performance of the fiber.

The fiber connection has a keyed slot SC/APC connection. Care must be taken to ensure the fiber is installed correctly. It is possible to force the connection so that the fiber is installed at a 180 degree rotation causing performance issues.

**Note:** *The SC/APC key is at the top and bottom on the connection on the remote.*

## *Figure 44 Remote Fiber-Optic Connector*

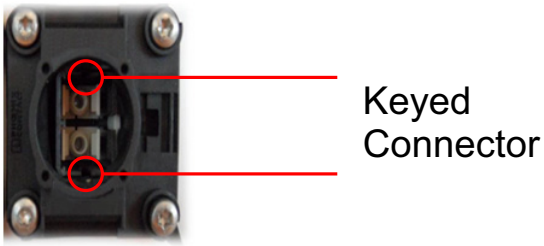


It is **highly recommended** that only the SCRJ fiber cables be used with the remotes. Not only does the SCRJ cable prevent the ingress of moisture and dust into to the fiber port but the cable also insures the fibers are correctly aligned in the connector. SCRJ fiber cables are ordered separately from Bird Technologies.

## *Figure 45 SCRJ Connector*

### AC Power Input

The Bird remote only comes with an AC input option. The voltage range will support 120VAC or 240VAC, 50 or 60 Hz. The remote ships with a weather proof C13 connector and weather proof strain relief housing. The unit does not ship with a power cord - only the power connector. The installation contractor will need to provide a power cable of at least 14AWG, 3 conductor cable.

## *Figure 46 Weatherproof AC Input Connector*

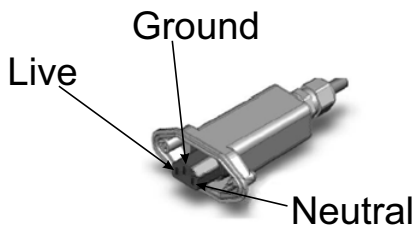


**WARNING**
Electrical installation should only be performed by a licensed electrician.

### External Alarm Connection

The external alarm port on the Bird remote requires an IP 67 D-sub connector (not supplied by Bird).

## *Table 65 Alarm Definitions*

| Alarm Input | Level | Alarm Text |
|---|---|---|
| 1 (Pin 9) | Error | Battery voltage low |
| 2 (Pin 4) | Critical | Loss of main AC power |
| 3 (Pin 8) | Warning | External alarm 3 |
| 4 (Pin 3) | Error | External alarm 4 |

## *Figure 47 External Alarm Connector*

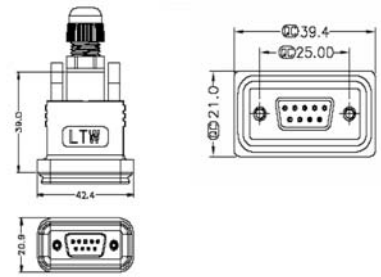


Use an IP 67 D-Sub connector for External connections

## Table 66 External Alarm Connector Pinout

| Pin | Function |
|---|---|
| 1 | Alarm relay output NC |
| 2 | Alarm relay output NO |
| 3 | Alarm input 4 |
| 4 | Alarm input 2 |
| 5 | Alarm input ground |
| 6 | Alarm relay output NC |
| 7 | Alarm relay output NO |
| 8 | Alarm input 3 |
| 9 | Alarm input 1 |

### Grounding

The remotes are furnished with a ground lug to be used if chassis grounding is required to meet local code or installation requirements. The external grounding lug must be used when the remote is installed in applications where it is susceptible to lightening strikes.

If the remote is mounted in areas with high EMF such as near high amperage transformers, turbines or broadcast antennas, properly grounding the chassis will provide reduce the likelihood interference.

## Figure 48 Remote Ground Connection

### Remote Unit Verification

Once the remote has been properly installed and all connections made the unit may be powered up. The unit is automatically powered up once power is applied to the AC plug on the bottom of the unit.

The typical power cycle of the remote is approximately 90 seconds. The red and green LED on the bottom of the remote will flash during the boot cycle.

- Once the boot cycle is complete, a solid red LED indicates there is no fiber connection or communication to the DAS head end.

## Installing the DHR Repeater

The repeaters units are factory configured and should not be opened in the field.

**WARNING**
The Repeaters are heavy , use care and always properly support units during installation. If allowed to fall a Repeater can cause injury or death.

**CAUTION**
Ensure the surfaces being used to mount the Repeater can safely support the full weight of the Repeater.

The remotes must be mounted in a vertical position. There are two recommended methods for Remote Unit installation, wall mounting or pole mounting. Regardless of the mounting style selected, the remotes must be mounted so that airflow over the external heat sink is not obstructed.

### Single Repeater Wall Mounting

The repeaters are shipped with standard wall mounting brackets. These brackets can be used indoors and outdoors.

- Mount the bracket without the repeater attached.

  **Note:** Always check local building codes for proper mounting techniques.

- Once the bracket is properly mounted, the repeater easily slides into the mount. See Figure 49.

### *Figure 49 Repeater Wall Mount*

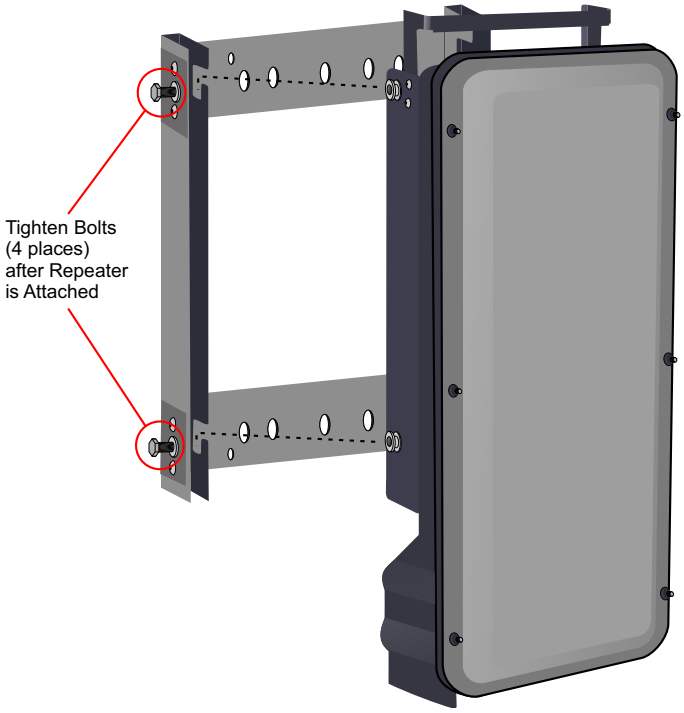


- Once the repeater is attached to the wall mount, the repeater must be properly secured to the mount by tightening bolts at each mounting point.

## Double Repeater Wall Mounting

Bird Technologies offers a bracket that allows two wall mount racks to be mounted back to back. This reduces the amount of wall space required when two repeaters are located together. The bracket is stainless steel and can be used indoors or outdoors.

### *Figure 50 Double Wall Mounting Bracket*

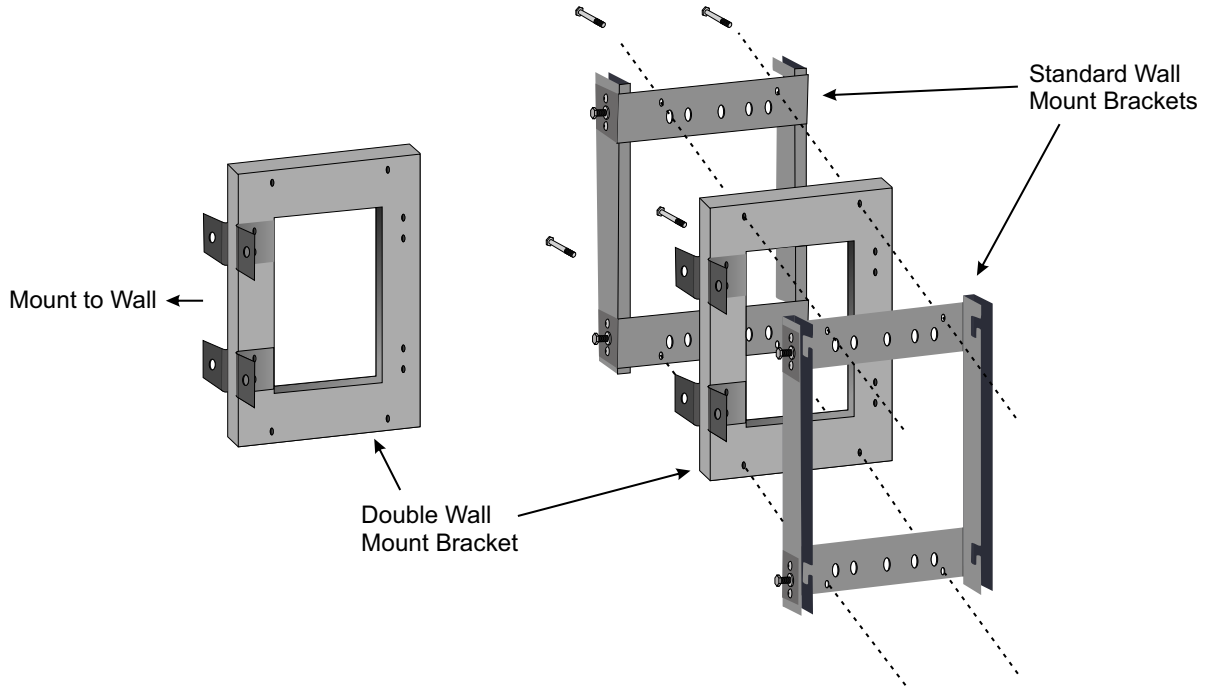


## Repeater Pole Mounting

Bird Technologies also offers a pole mounting option. The pole mount brackets are designed to be used with the Double Wall Mount bracket.

### *Figure 51 Repeater Pole Mounting Option*

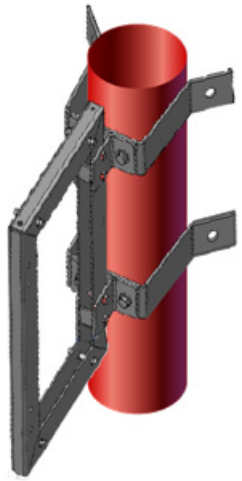

## Solar Shield

Direct exposure to sun light can cause temperatures of the repeater to exceed the 55 °C (131°F) rating. A simple solution offered by Bird is to attach an optional solar shield to the affected repeaters. The solar shields are sold separately.

### *Figure 52 Remote Unit Solar Shield*

## Cabling

There are many options for the Bird repeaters which can affect the number of connections on the bottom of each repeater. The standard connections are:

- Ethernet port
- RF Ports (N-Type standard)
- Input Power
- External alarm port
- Grounding
- Fiber Optic (optional)

### *Figure 53 Repeater Cabling Connectors*

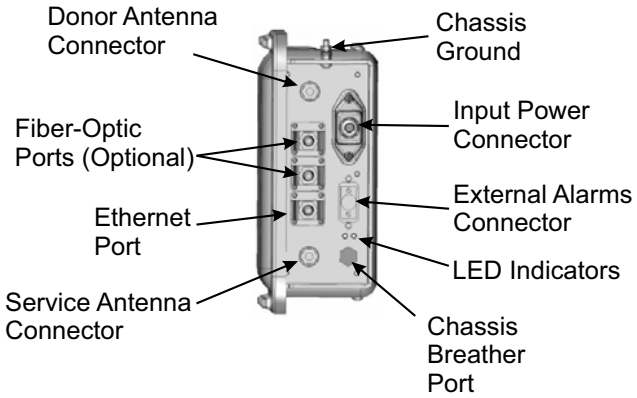

### Ethernet Port

The RJ45 Ethernet port is located on the bottom panel of the repeater unit. Connection of the Ethernet port is not required for normal operation of the repeater. The port offers convenient access to the system GUI during installation, commissioning and troubleshooting. Ensure the provided IP67 rated protective cap is replaced when the Ethernet port is not in use.

If the Ethernet connection is to be long term or permanent, ensure that the appropriate Ethernet patch cable is utilized to prevent the ingress of moister into the port.

### Fiber Optic Connection

If the fiber optic option is ordered, the fiber connection on the bottom of the repeater has an IP67 rated protective cap. The protective cap must remain in place until the fiber is to be inserted. This will help prevent foreign particles from degrading performance of the fiber.

The fiber connection has a keyed slot SC/APC connection. Care must be taken to ensure the fiber is installed correctly. It is possible to force the connection so that the fiber is installed at a 180 degree rotation causing performance issues.

**Note:** *The SC/APC key is at the top and bottom on the connection on the repeater.*

## *Figure 54 Remote Fiber-Optic Connector*

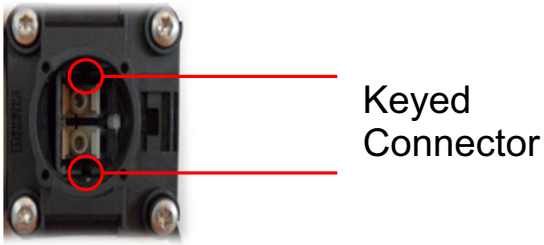


It is **highly recommended** that only the SCRJ fiber cables be used with the repeaters. Not only does the SCRJ cable prevent the ingress of moisture and dust into to the fiber port but the cable also insures the fibers are correctly aligned in the connector. SCRJ fiber cables are ordered separately from Bird Technologies.

## *Figure 55 SCRJ Connector*

### AC Power Input

The Bird repeater only comes with an AC input option. The voltage range will support 120VAC or 240VAC, 50 or 60 Hz. The remote ships with a weather proof C13 connector and weather proof strain relief housing. The unit **does not ship with a power cord** - only the power connector. The installation contractor will need to provide a power cable of at least 14AWG, 3 conductor cable.

## *Figure 56 Weatherproof AC Input Connector*

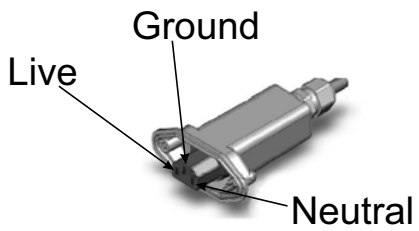


| WARNING |
|---|
| Electrical installation should only be performed by a licensed electrician. |

### External Alarm Connection

The external alarm port on the repeater requires an IP 67 D-sub connector (not supplied by Bird).

## *Table 67 Alarm Definitions*

| Alarm Input | Level | Alarm Text |
|---|---|---|
| 1 (Pin 9) | Error | Battery voltage low |
| 2 (Pin 4) | Critical | Loss of main AC power |
| 3 (Pin 8) | Warning | External alarm 3 |
| 4 (Pin 3) | Error | External alarm 4 |

## *Figure 57 External Alarm Connector*

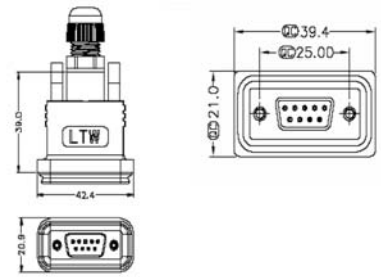


Use an IP 67 D-Sub connector for External connections

## Table 68 External Alarm Connector Pinout

| Pin | Function |
|---|---|
| 1 | Alarm relay output NC |
| 2 | Alarm relay output NO |
| 3 | Alarm input 4 |
| 4 | Alarm input 2 |
| 5 | Alarm input ground |
| 6 | Alarm relay output NC |
| 7 | Alarm relay output NO |
| 8 | Alarm input 3 |
| 9 | Alarm input 1 |

### Grounding

The repeaters are furnished with a ground lug to be used if chassis grounding is required to meet local code or installation requirements.

## Figure 58 Remote Ground Connection

This section is focused on the GUI interface and initial software setting of the DAS. No special software is require to access the Bird DAS. Access is provided via most web browsers such as Mozilla Firefox or Google Chrome.

The BGW should be powered up and allowed about 5 minutes to fully boot prior to applying power to the Master Unit. The BGW will assign IP addresses to the Master Unit components. If the Master Unit is powered up prior to the BGW then it could take up to 30 minutes for the Master Unit components to get assigned an IP address. Master Unit cards will show a quick flash of the green LED when an IP address has been assigned.

Special Note: The following is based on version 3.5 software.

## Ethernet Connection

1. Connect a laptop to any open port on the Headend Ethernet switch.
2. Ensure the laptop network settings have DHCP enabled and the “Obtain an IP address automatically” radio button checked.

### *Figure 59 Windows TCP/IP Settings*

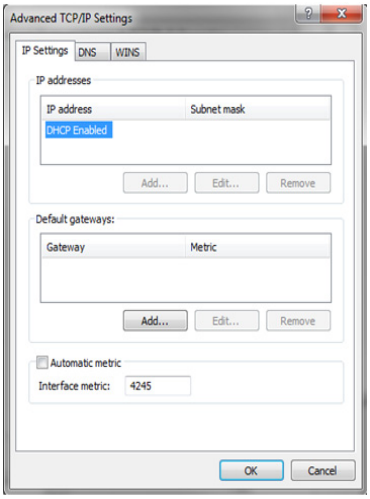


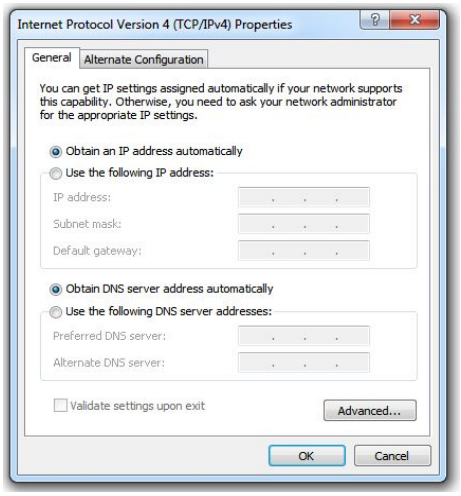


3. Using an Internet browser go to https://172.22.0.1 to access the BGW. A successful entry will show access to the login page.
4. Login to the BGW.
   - Username: "extended"
   - Password: "admin"

### *Figure 60 BGW Login page*

# BGW Configuration

## BGW Naming

1. Select **Configuration** in top right corner. See Figure 61.
2. Select **External Comm** in left menu.
3. Select **BGW Name** tab in top menu.
4. Enter site name:
   a. You may use any combination of alphanumeric characters and the special character of dash "-". Do not use any other special characters or space.
      - ✓ 0 through 9
      - ✓ a through z
      - ✓ A through Z
      - ✓ -
      - ✓ Limit of 56 characters
   b. Use a site name that is descriptive enough to distinguish the BGW from other sites. Generic names may delay troubleshooting efforts.
5. Click **Submit**.

   **Note:** *After the new host name is entered, the unit must be restarted. This is the only change that requires a restart. Select the physical restart button on the left side of the BGW.*

### *Figure 61 BGW Site Name*

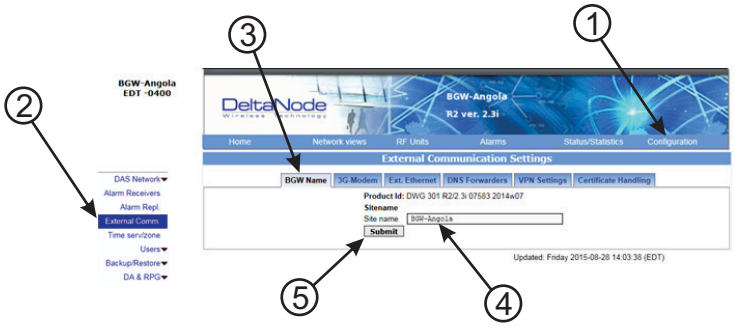


## EXT Ethernet

In order for the BGW to be able to communicate outward, the Ext Ethernet connection has to be programmed. Consult with your Internet service provider or IT department for the IP address, Netmask and Gateway IP address settings.

### *Figure 62 BGW External Communications*

## VPN Settings

On occasions, the BGW will be set up behind a firewall. To be able to access the BGW from external locations the Primary BGW settings will need to be configured to allow access. Consult with your IT department for these parameters.

Bird Technologies offers monitoring services. When these services are contracted, enter the Bird parameters in the Secondary BGW settings so that system alarms are correctly forwarded to the Bird NOC.

### *Figure 63 BGW VPN Settings*

## Time Zone

To ensure that alarms are correctly labeled with the local time the time zone for the BGW will need to be set.

1. Select **Configuration**. See Figure 64.
2. Click **Time serv/zone**.
3. Select the **Time and Time zone** Tab.
4. Select the local time zone from the drop-down menu.
5. Click **Submit**.

### *Figure 64 BGW Time Zone Settings*

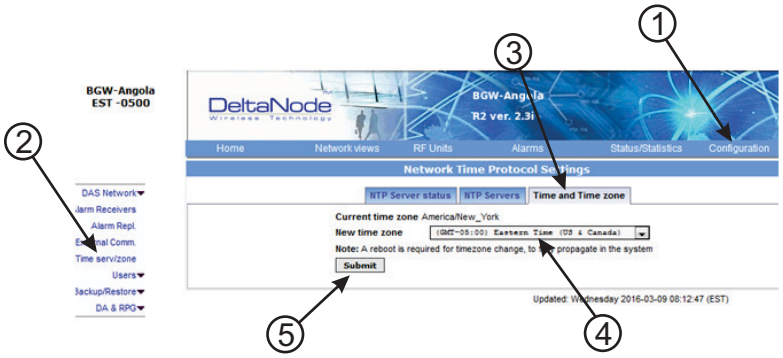

## NTP Servers

NTP servers provide accurate clocks for the BGW. Utilizing multiple sources prevents clock issues as a result of one server becoming corrupt or dropping out of contact. The BGW is compatible with NTP version 4 servers. The NTP settings in the image below are the default for Redhat servers.

1. Select **Configuration**.
2. Click **Time serv/zone**.
3. Select the **NTP Servers** Tab.
4. Enter the NTP Server information. The FQDN settings are reserved for deployments utilizing the CGW.
5. Click **Submit**.

If no Internet access is available, the BGW will create its own clock to give the sub-nodes of the system a valid NTP service.

### *Figure 65 NTP Server Settings*

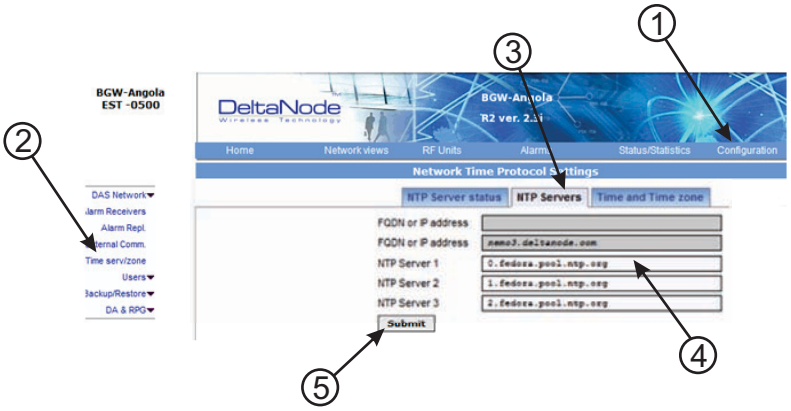

## Email Server

The BGW is capable of emailing alarms directly to select email addresses. Access the set up function via Configuration, Alarm Receivers and Server Prop.

Consult with your IT department for configuration settings.

1. Select **Configuration**.
2. Click **Alarm Receivers**.
3. Select the **Server Prop.** Tab.
4. Enter the Email Server information. Consult with your IT department for configuration settings.
5. Click **Save and Apply**.

### *Figure 66 Email Server Settings*

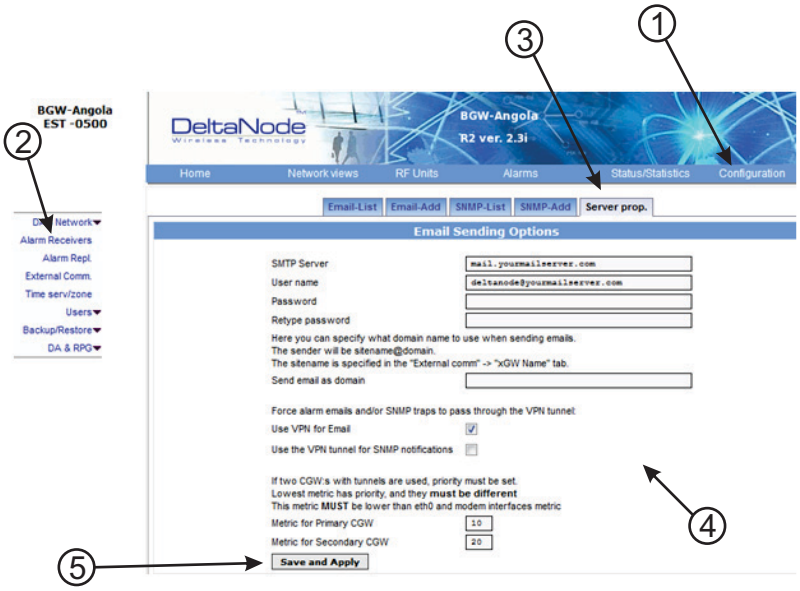

## BIU Configuration

The initial screen for the BIU provides basic information such as name, serial number, part number and active alarms. The Locate me! button causes an LED to flash on the unit so that the module can be identified in the chassis.

In the left menu, notice the RF 1 and RF 2. The BIU has two RF paths or strips that are correlated to the two RF inputs on the BIU card. Each RF path has independent settings that can be accessed via the appropriate selection.

### *Figure 67 BIU Welcome Screen*

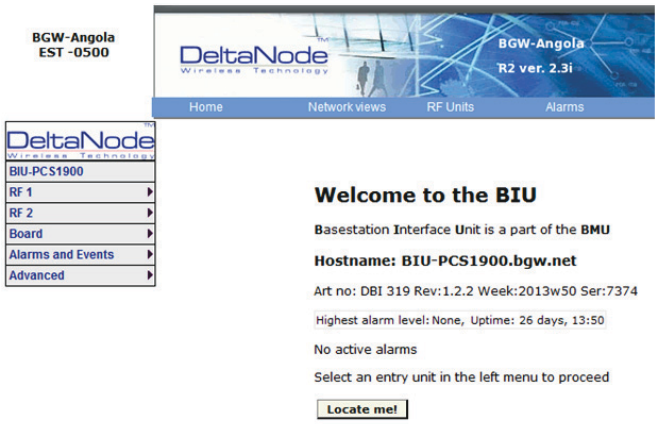


## BIU RF1 Status

This page shows the current status and configuration of the BIU.

### *Figure 68 BIU RF1 Status*

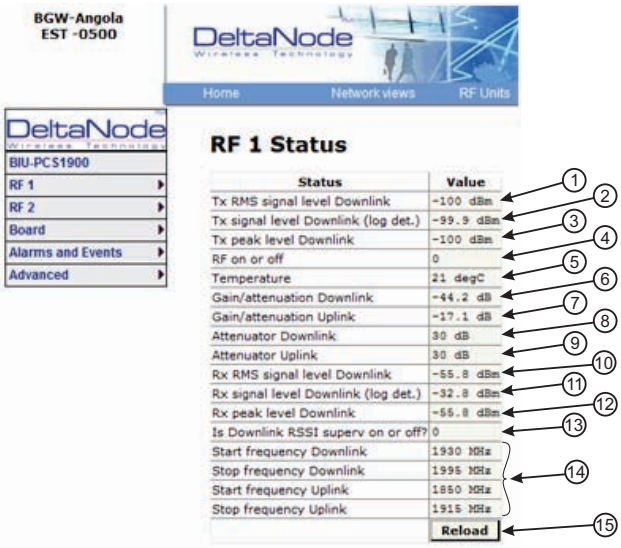

| Item | Description |
|---|---|
| 1 | Downlink RMS value leaving the BIU card to the ICU/FOI. Good for measuring GSM and UMTS levels. |
| 2 | Downlink log detector signal leaving the BIU card to the ICU/FOI. |
| 3 | Peak downlink RF value exiting the BIU card on the select path. |
| 4 | 0=RF is set to Off (attenuation is set to maximum).<br>1= RF is set to On.<br>**Note**: This is only in reference to one of the two BIU RF paths/strips. |
| 5 | Temperature of the BIU card. |
| 6 | This measurement is the actual loss of the downlink RF signal in the BIU taking into account raw or inherent loss of the card plus the adjustable attenuator. |
| 7 | This measurement is the actual gain or loss on the uplink RF signal in the BIU taking into account raw or inherent gain of the card plus the uplink adjustable attenuator. |
| 8 | Adjustable downlink attenuator setting for the selected RF path.<br><br>**Note**: If RF is turned off (see #4) the attenuator value is automatically set to maximum attenuation. When RF is turned on, the setting of the adjustable attenuator will be shown. |
| 9 | Adjustable uplink attenuator setting for the selected RF path.<br><br>**Note**: If RF is turned off (see #4) the attenuator value is automatically set to maximum attenuation. When RF is turned on, the setting of the adjustable attenuator will be shown. |
| 10 | Calculated downlink RMS value entering the BIU card from the BTS.<br><br>**Note**: This is the downlink into the BIU card and not an uplink value. |
| 11 | Calculated downlink value entering the BIU card from the BTS .<br><br>**Note**: This is the downlink into the BIU card and not an uplink value. |
| 12 | Peak downlink RF value entering the BIU card on the select path.<br><br>**Note**: This is the downlink into the BIU card and not an uplink value. |
| 13 | 0= Downlink alarm is set to Off.<br>1= Downlink alarm is set to On. |
| 14 | Bandwidth of the BIU card |
| 15 | Pressing Reload will refresh the page |

## BIU RF1 Settings

This page will allow the user to change the attenuator values in the BIU for the path selected.

### *Figure 69 BIU RF1 Settings*

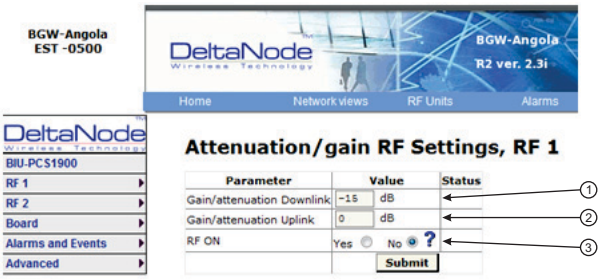


| Item | Description |
|---|---|
| 1 | Attenuator setting for the downlink path. Enter a value from -14 to -44 (range varies depending of frequency band).<br><br>**Note**: Click Submit after entering value. |
| 2 | Attenuator/Gain setting for the uplink path.<br>Enter a value from -17 to 12 (range varies depending of frequency band).<br>Note that the BIU has raw gain in the uplink path on certain BIU types (gain can be determined by positive value in the setting range.<br>A selection of 12 indicates full gain of 12dB in the BIU.<br>A selection of 9 will decrease the BIU uplink output by 3dB.<br>A selection of 0 will decrease the BIU uplink output by 12dB.<br>A selection of -17 will decrease the BIU uplink output by 29dB.<br><br>**Note**: Click Submit after entering value. |
| 3 | This selection turns the uplink path On or Off (maximum attenuation setting). |

## BIU Hardware Test Points

This page shows various test point measurements used for status and troubleshooting purposes.

### *Figure 70 BIU Hardware Test Points*

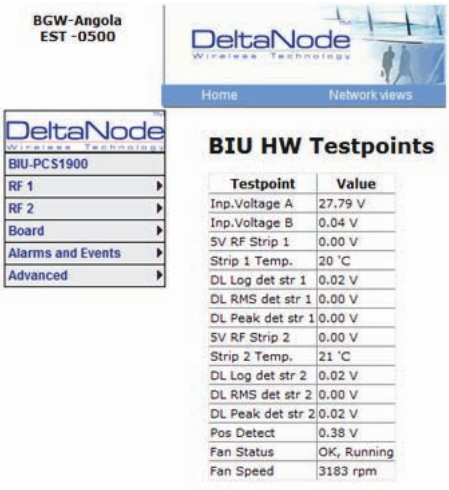


| Testpoint | Value |
|---|---|
| Inp.Voltage A | 27.79 V |
| Inp.Voltage B | 0.04 V |
| 5V RF Strip 1 | 0.00 V |
| Strip 1 Temp. | 20 °C |
| DL Log det str 1 | 0.02 V |
| DL RMS det str 1 | 0.00 V |
| DL Peak det str 1 | 0.00 V |
| 5V RF Strip 2 | 0.00 V |
| Strip 2 Temp. | 21 °C |
| DL Log det str 2 | 0.02 V |
| DL RMS det str 2 | 0.00 V |
| DL Peak det str 2 | 0.02 V |
| Pos Detect | 0.38 V |
| Fan Status | OK, Running |
| Fan Speed | 3183 rpm |

## BIU Alarm List

This page displays all current and past alarms.

- Green indicates that the alarm has cleared.
- Yellow indicates a warning alarm.
- Red indicates a service affecting alarm.

### *Figure 71 BIU Alarm List*

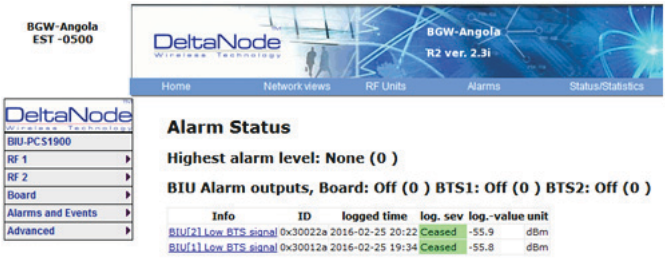


| Info | ID | logged time | log. sev | log.-value | unit |
|---|---|---|---|---|---|
| BIU[2] Low BTS signal | 0x30022a | 2016-02-25 20:22 | Ceased | -55.9 | dBm |
| BIU[1] Low BTS signal | 0x30012a | 2016-02-25 19:34 | Ceased | -55.8 | dBm |

## BIU Change History

This page shows a history of all setting changes.

### *Figure 72 BIU Change History*

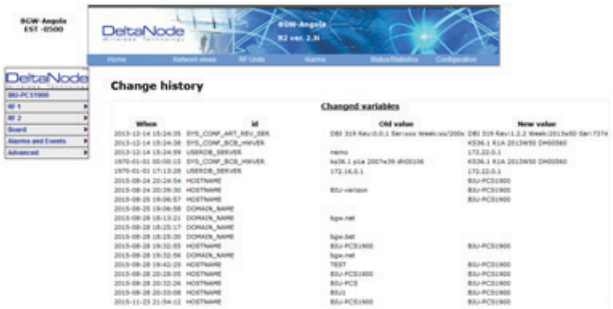


## BIU Alarm configuration RF1

This page allows for certain alarm thresholds of the BIU to be changed.

### *Figure 73 BIU Alarm configuration*

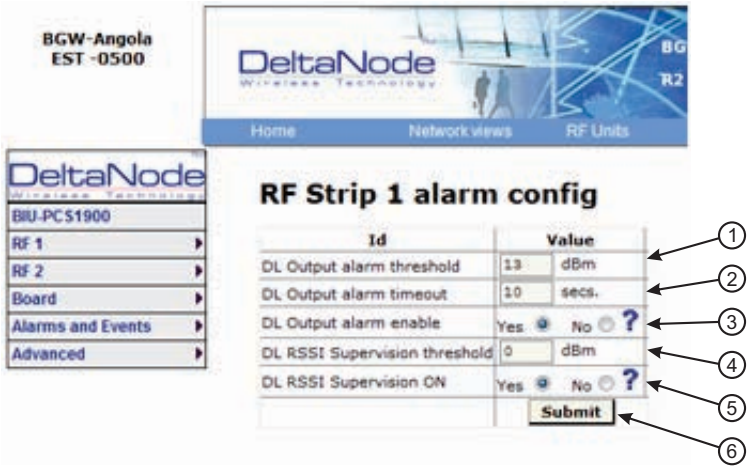


| Item | Description |
|---|---|
| 1 | Set the value in dBm that the BIU downlink output has to exceed in order to create an alarm |
| 2 | Set the value in seconds for the amount of time that the BIU downlink output has to be above the threshold level in order to create an alarm. |
| 3 | Enables or disables BIU threshold/high power alarm. |
| 4 | Set the value in dBm that the BIU downlink output has to drop below in order to create an alarm. |
| 5 | Enables or disables BIU supervision/low level alarm. |
| 6 | Click Submit after entering value(s). |

## BIU Advanced Network Setup

This page allows for manual override of network settings.

Default configurations should be used with DHCP set to Yes.

> **Note:** *Changing DHCP to "No" can cause loss of communications to the BIU and should only be used in very specific situations.*

### *Figure 74 BIU Network Setup*

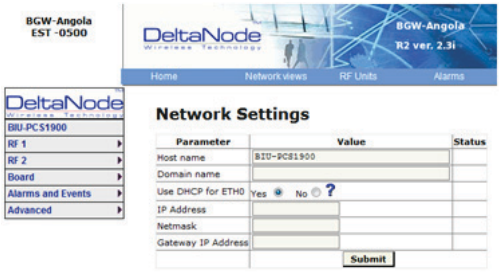


## BIU Advanced Menus

These menus provide information only status and settings of the BIU that are typically used by the manufacturer.

BIU > Advanced>HW config

BIU > Advanced>AD-values RF1

BIU > Advanced>AD-values RF2

BIU > Advanced>ADC raw

BIU > Advanced>Software status

BIU > Advanced>Process status

BIU > Advanced>System status

## BIU Application Handling

The application handling page allows for stopping software functions and rebooting software programs.

Alarm Handler: Selecting Reboot (circular icon) will clear all the alarms in the history for the card selected. This is helpful after turning a system up and wanting to clear alarm log created during the installation and turn up.

> **Note:** *Only the Reboot command should be used by the technician. All other functions should only be used under supervision of Bird engineering as they may cause data corruption if not initiated properly. The radio button will stop a process and can have negative affects on the function of the DAS.*

### *Figure 75 BIU Application Handling*

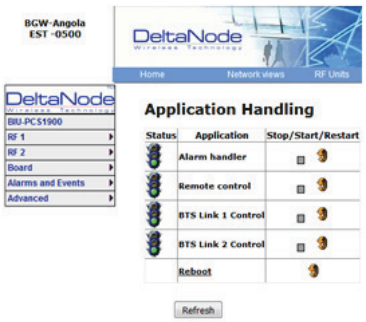


## BIU Reset to Factory Default

To reset the BIU to factory default, carefully press the “Reset” button [located below the **UL In 1** QMA connector] for 10 seconds. This is helpful when a card fails to appear in the Configuration menu.

### *Figure 76 BIU Reset*

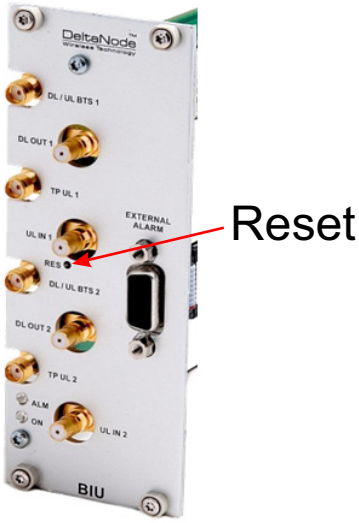

## FOI Configuration

The initial screen for the FOI provides basic information such as name, serial number, part number and active alarms. The **Locate me!** button causes an LED to flash on the unit so that the module can be identified in the chassis.

### *Figure 77 FOI Welcome Screen*

### *Figure 78 FOI Welcome Screen SW Version 3.9, DOI401*

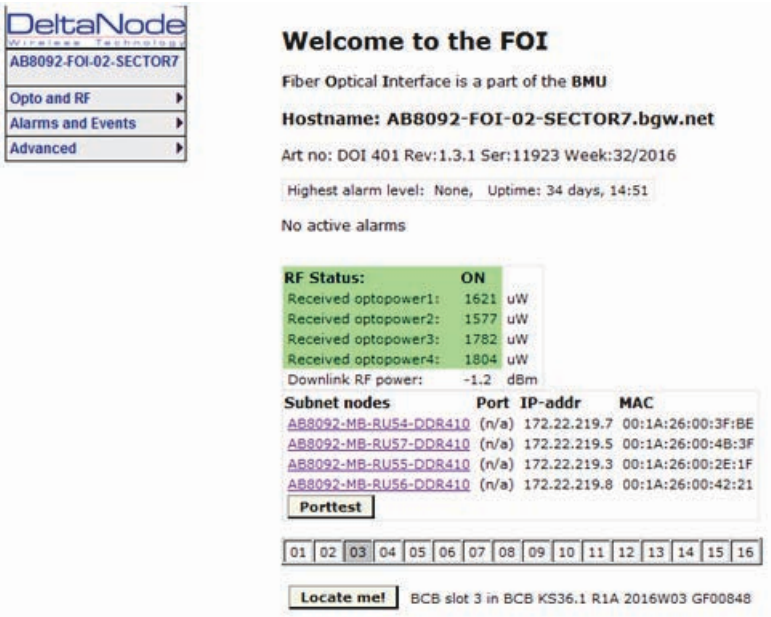

## FOI Opto Status

This page will show the current status and configuration of the FOI.

### *Figure 79 FOI Opto Status*

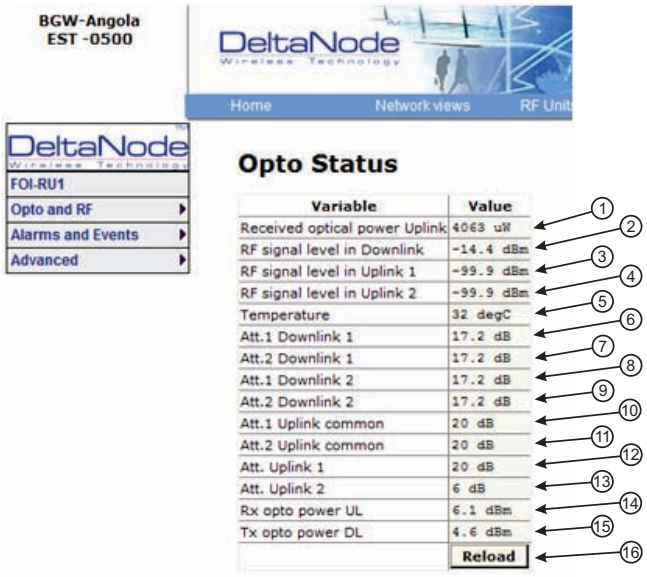


| Item | Description |
|---|---|
| 1 | Fiber optic received optical power from the remote unit. See item 1 in Figure 80 for measurement location. |
| 2 | RF downlink power to the remote. See item 2 in Figure 81 for location on the FOI circuitry. Note that with no RF power into the BIU the FOR will still show signal in the downlink. This is the sub-carrier that is typically 10 dB below the anticipated RF level. |
| 3 | RF path 1 input power from the remote. See item 3 in Figure 80 for location on the FOI circuitry. |
| 4 | RF path 2 input power form the remote. See item 4 in Figure 80 for location on the FOI circuitry. |
| 5 | Temperature of the FOI card |
| 6 | Downlink path 1 attenuator #1 setting. See item 6 in Figure 81 for location on the FOI circuitry. Value may be slightly different than the value in Settings due to changes in temperature compensation. |
| 7 | Downlink path 1 attenuator #2 setting. See item 7 in Figure 81 for location on the FOI circuitry. Value may be slightly different than the value in Settings due to changes in temperature compensation. |
| 8 | Downlink path 2 attenuator #1 setting. See item 8 in Figure 81 for location on the FOI circuitry. Value may be slightly different than the value in Settings due to changes in temperature compensation. |
| 9 | Downlink path 2 attenuator #2 setting. See item 9 in Figure 81 for location on the FOI circuitry. Value may be slightly different than the value in Settings due to changes in temperature compensation. |
| 10 | Uplink common path attenuator #1 setting. See item 10 in Figure 80 for location on the FOI circuitry. Value may be slightly different than the value in Settings due to changes in temperature compensation. |
| 11 | Uplink common path attenuator #2 setting. See item 11 in Figure 80 for location on the FOI circuitry. Value may be slightly different than the value in Settings due to changes in temperature compensation. |
| 12 | Uplink path #1 attenuator setting. See item 12 in Figure 80 for location on the FOI circuitry. Value may be slightly different than the value in Settings due to changes in temperature compensation. |
| 13 | Uplink path #2 attenuator setting. See item 13 in Figure 80 for location on the FOI circuitry. Value may be slightly different than the value in Settings due to changes in temperature compensation. |
| 14 | Calculated uplink optical input from the remote unit. See item 14 in Figure 80 for location on the FOI circuitry. |
| 15 | Calculated downlink optical output. See item 9 in Figure 81 for location on the FOI circuitry. |
| 16 | Pressing Reload will refresh the page |

## Figure 80 FOI Uplink Measurement Locations

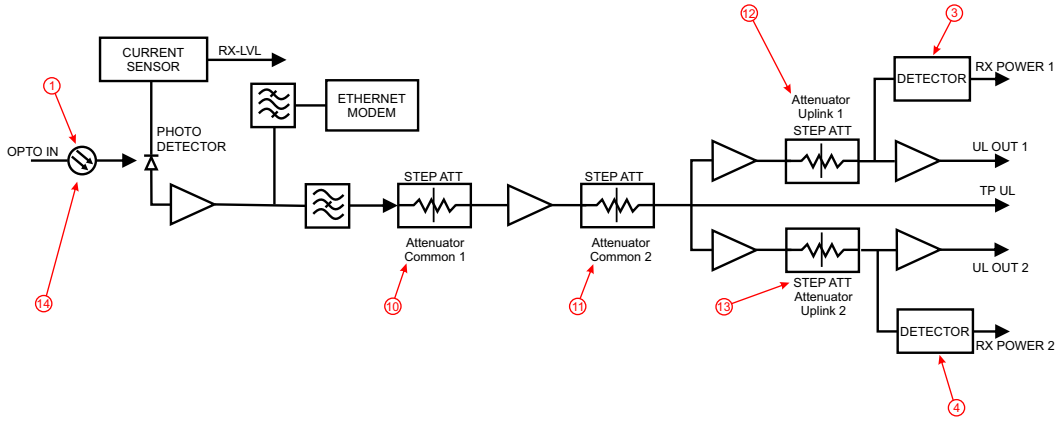


## Figure 81 FOI Downlink Measurement Locations

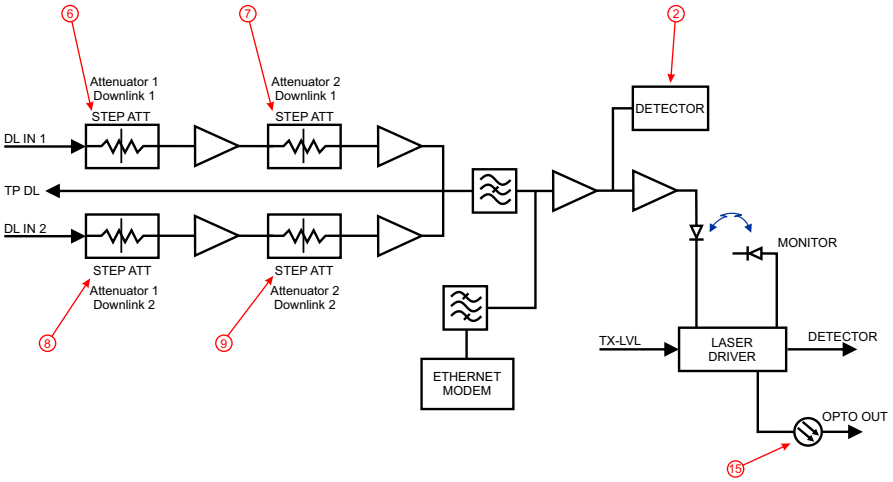

## Figure 82 FOI Opto Status DOI401

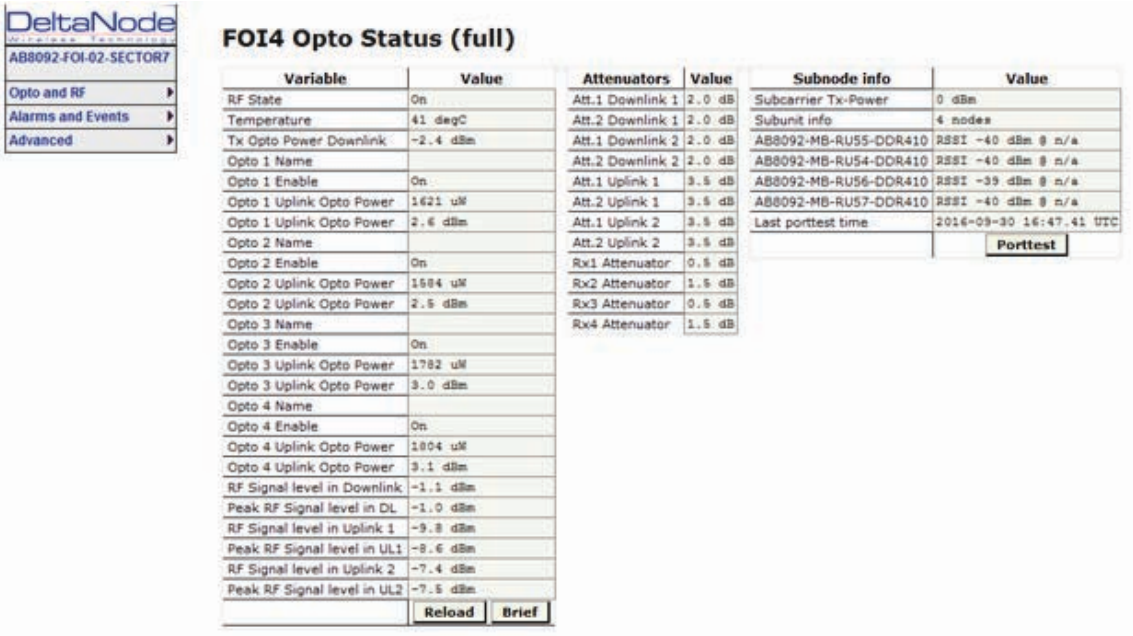


### FOI Opto and Attenuator Settings

This page will allow changes to be made to the FOI values

## Figure 83 FOI Opto and Attenuator Settings

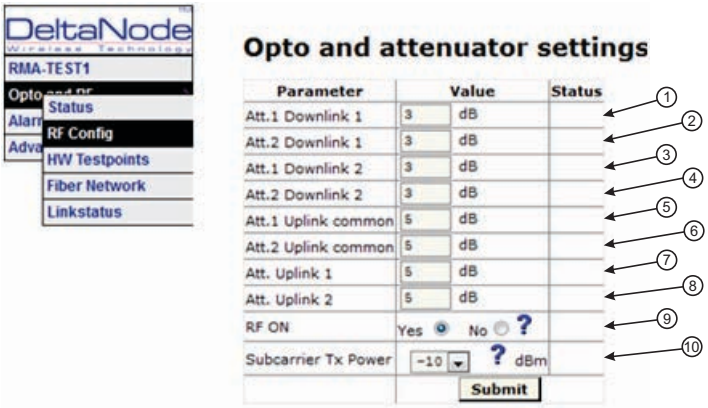


| Item | Description |
|---|---|
| 1 | Downlink path 1 attenuator #1. See item 1 in Figure 84 for measurement location. |
| 2 | Downlink path 1 attenuator #2. See item 2 in Figure 84 for location on the FOI circuitry. |
| 3 | Downlink path 2 attenuator #1. See item 3 in Figure 84 for location on the FOI circuitry. |
| 4 | Downlink path 2 attenuator #2. See item 4 in Figure 84 for location on the FOI circuitry. |
| 5 | Uplink common path attenuator #1. See item 5 in Figure 85 for location on the FOI circuitry. |
| 6 | Uplink common path attenuator #2. See item 6 in Figure 85 for location on the FOI circuitry. |
| 7 | Uplink path 1 attenuator. See item 7 in Figure 85 for location on the FOI circuitry. |

| Item | Description |
|---|---|
| 8 | Uplink path 2 attenuator. See item 8 in Figure 85 for location on the FOI circuitry. |
| 9 | RF ON Yes set the UL values as selected above. RF No turns off laser.<br>**Note:** *Setting to "No" will disconnect connectivity to the remote(s)* |
| 10 | Subcarrier TX Power is used for the communications and control signaling of the DAS.<br>• Default setting is -10dBm for single port FOI cards and 0dBm for the 4-port FOI card.<br>• The value may need to be changed in situations where fiber loss is near the maximum and communications issues arise. Unnecessarily increasing the subcarrier TX power may affect RF performance of the DAS. |

## Figure 84 Downlink Opto and Attenuator Settings

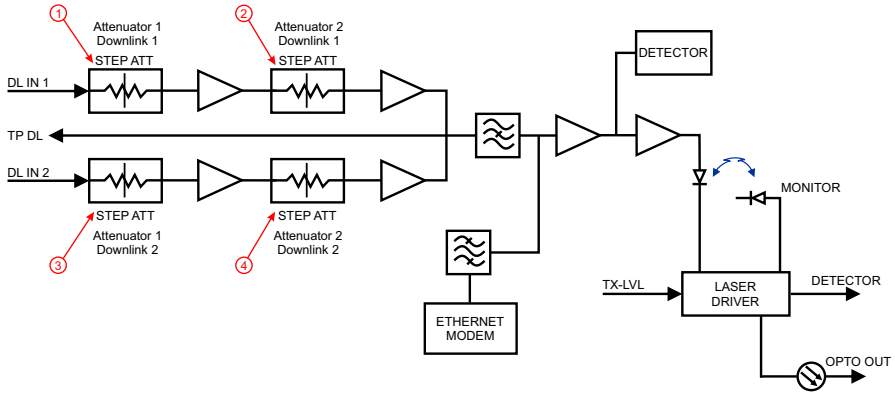


## Figure 85 Uplink Opto and Attenuator Settings

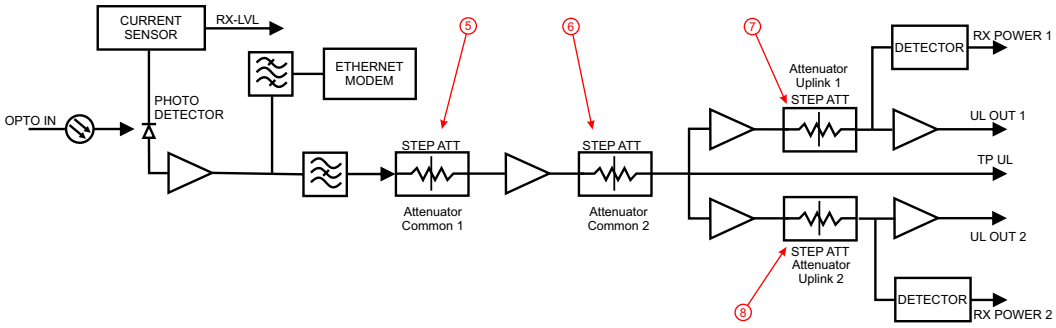

## *Figure 86 DOI401 FOI Opto and Attenuator Settings*

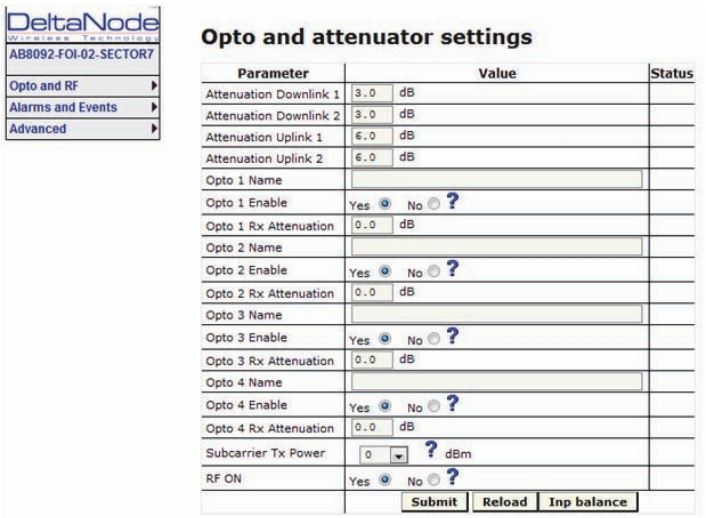


### FOI Fiber Network Subunits

This page provides a visual indication on the fiber link status for each connection to the FOI.

## *Figure 87 FOI Fiber Network Subunits*

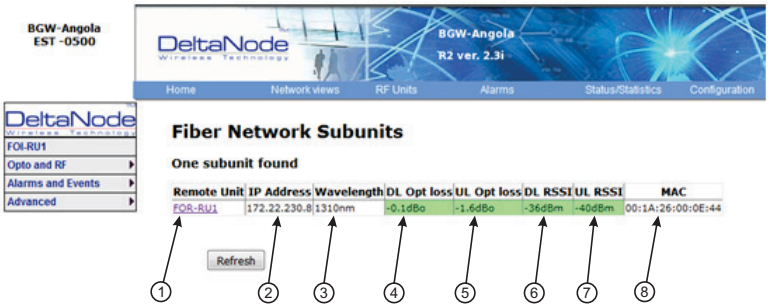


| Item | Description |
|---|---|
| 1 | Selecting the remote link will direct the browser to the Remote Unit page. |
| 2 | Network IP address of the FOI card. |
| 3 | Optical wavelength of the transmit laser in the FOI card. |
| 4 | Subcarrier optical loss between the FOI and FOR in the downlink path. |
| 5 | Subcarrier optical loss between the FOR and FOI in the uplink path. |
| 6 | Subcarrier power to the modem in the downlink path of the FOR - Range should be -30 to -60. If the level is too high or too low communication and other system problems may occur. |
| 7 | Subcarrier power to the modem in the uplink path of the FOI - Range should be -30 to -60. If the level is too high or too low communication and other system problems may occur. |
| 8 | MAC address of the FOI card |

## Figure 88 DOI401 FOI Fiber Network Subunits

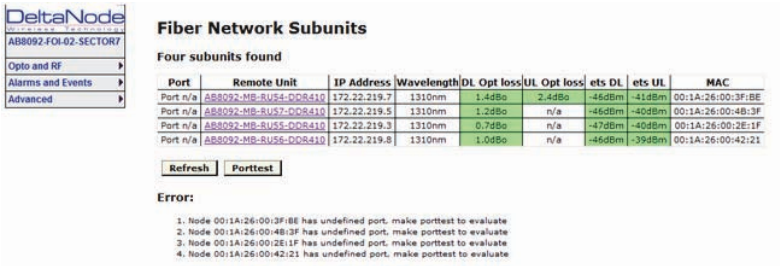


### FOI Network Setup

This page allows for manual override of network settings. Default configurations should be used with DHCP set to Yes.

> **Note:** *Changing DHCP to "No" can cause loss of communications to the BIU and should only be used in very specific situations. Do not enter IP configuration data in other associated settings.*

## Figure 89 FOI Network Settings

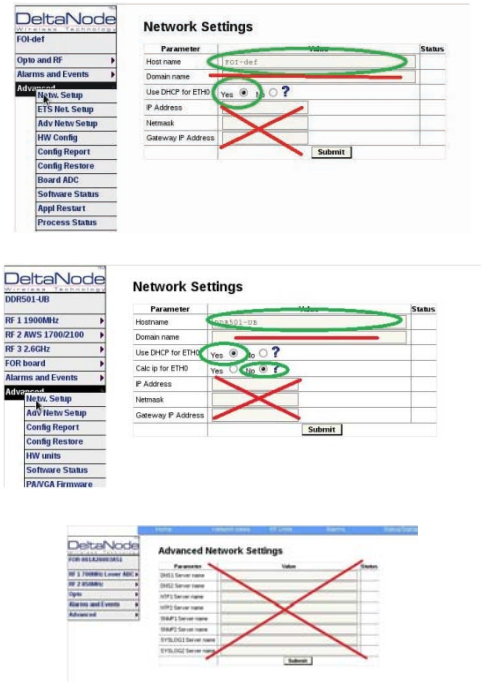

### FOI Reset to Factory Default

To reset the FOI to factory default, carefully press the “Reset” button (see Figure 90) for 10 seconds. This is helpful when a card fails to appear in the Configuration menu.

## Figure 90 FOI Reset Button

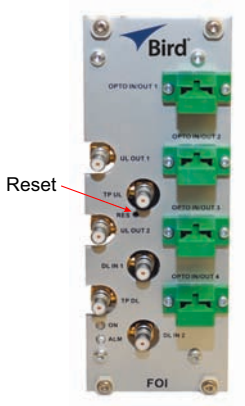


## FOR

The initial screen for the FOR provides basic information such as name, serial number, part number and active alarms. The Locate me! button causes an LED to flash on the chassis so that the unit can be identified in the field.

> **Note:** *If the fiber is just now connected to the FOI card, it could take up to 30 minutes for the FOI to assign an IP address to the FOR. See section for* "Moving Remotes to Different FOI Port" on page 94 *for details on how to quicken the IP assignment.*

## Figure 91 FOR Welcome Screen

## Figure 92 FOR Welcome Screen

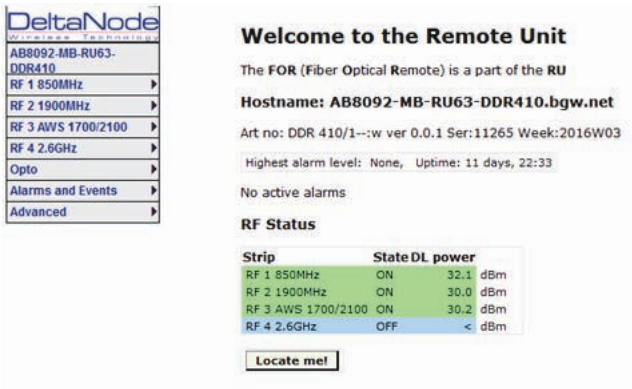


### RF Strip 1 XXX MHz Status

## Figure 93 FOR RF 1 Status

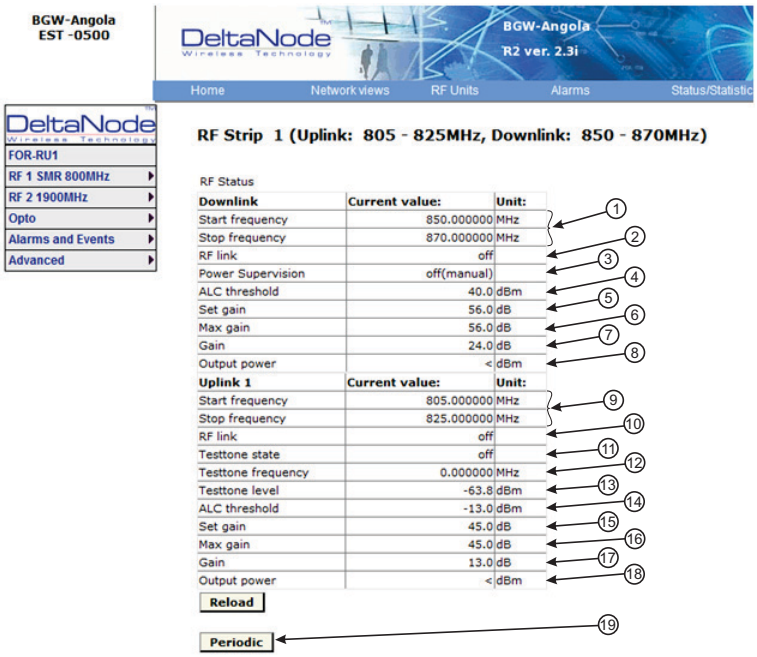


| Item | Description |
|---|---|
| 1 | Downlink frequency band for the RF path/strip selected |
| 2 | RF link setting for the downlink path: On or Off. |
| 3 | Downlink low power alarm turned On or Off. |
| 4 | Setting of the downlink ALC threshold. |
| 5 | Gain setting for the RF path under review. |
| 6 | Maximum allowed gain will always be the same as the set gain except in special builds. |

| Item | Description |
|---|---|
| 7 | The amount of actual gain used by the system. Might not achieve max gain setting if ALC is in operation. If the set gain is 56 as it is above, RF is turned on and the actual gain in line 7 is less than 56 then the system is being overdriven and ALC is kicking in. Reduce gain. Suggest starting with the value displayed in line 7 since this is the most gain that is being used. |
| 8 | Output power of the amplifier for the path under review. |
| 9 | Uplink frequency band for the RF path/strip selected |
| 10 | RF link setting for the uplink path: On or Off. |
| 11 | Status of uplink test tone signal. Test tone automatically turns off after 60 minutes. |
| 12 | Uplink test tone frequency setting. |
| 13 | Uplink test tone level. Not adjustable. Accounts for losses in internal duplexers, if any. |
| 14 | Uplink ALC threshold setting. |
| 15 | Gain setting in the uplink path. |
| 16 | Maximum allowed gain set by the system. |
| 17 | Actual gain being used in the uplink path. The figure might not match gain setting if ALC is in operation. |
| 18 | Uplink output to the FOI.<br>**Note:** *If the uplink path is set to Off a reading of "<" is returned.* |
| 19 | Periodic enables a constant update of the status screen. |

## RF Strip 1 XXX MHz Configuration

### *Figure 94 FOR RF 1 Configuration*

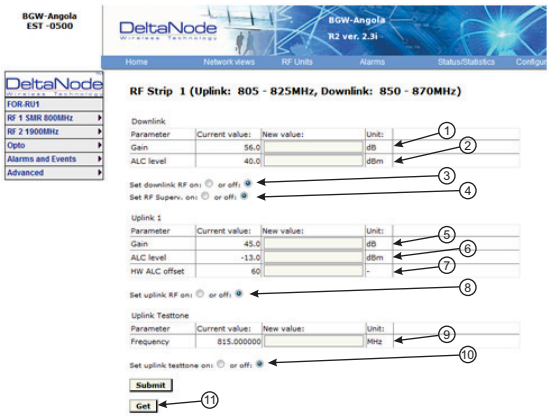


| Item | Description |
|---|---|
| 1 | Downlink gain setting for RF path under review. |
| 2 | Downlink ALC setting for RF path under review. The factory default is set at the rated power of the remote unit (i.e. DDH is set to 43dB). The level could be set lower for specific situations. Note that the factory level is set at the antenna port. If remote is shutting down due to being over driven it is suggested to reduce the ALC level by one or two dB to reduce the number of alarms. |
| 3 | Turns downlink RF on or off. |

| Item | Description |
|---|---|
| 4 | Turns downlink low power alarm on or off. |
| 5 | Uplink gain setting for RF path under review. |
| 6 | Uplink ALC setting for RF path under review. This is the threshold at which the system will start reducing further gain to prevent increases in uplink RF to the FOI. After 10dB decrease in gain an uplink alarm will be triggered<br>**Note:** *Should be left a factory default. Only change if FOR uplink gain is changed. If gain is increased on FOR uplink then the same value should be decreased on the ALC.*<br>**Example:** Changing the UL FOR gain from 12 to 17 would require ALC to be changed from -13 to -18. |
| 7 | Hardware ALC offset measured in tenths of a dB. Default setting of 60 (6dBm) should be used for most applications. Should the software not be able to reduce uplink gain fast enough after the ALC threshold has been exceed, hardware attenuation will be added to protect the uplink path. In the example above, the hardware attenuation will trigger at -7dBm (-13dBm ALC threshold minus 6dBm HW ALC offset = -7dBm) |
| 8 | Turns uplink RF on or off. |
| 9 | Sets uplink test tone frequency. Must be within uplink frequency limits of the RF module. |
| 10 | Turns on uplink test tone. Test tone times out after 60 minutes. |
| 11 | Retrieves current FOR settings from system. |

### RF Strip 1 XXX MHz Configuration Software Version 3.9

Software release 3.9 introduces settable Return Loss measurements and control over alarms. The default interval setting is “0” indicating the return loss alarm feature is turned off. Return loss alarms are often disabled when there is a passive antenna network installed beyond the remote.

The default Return Loss setting is "9". The remote will start shutting down and/or PA damage can result with a return loss of lower than 6.

## *Figure 95 FOR RF 1 Configuration, Software Version 3.9*

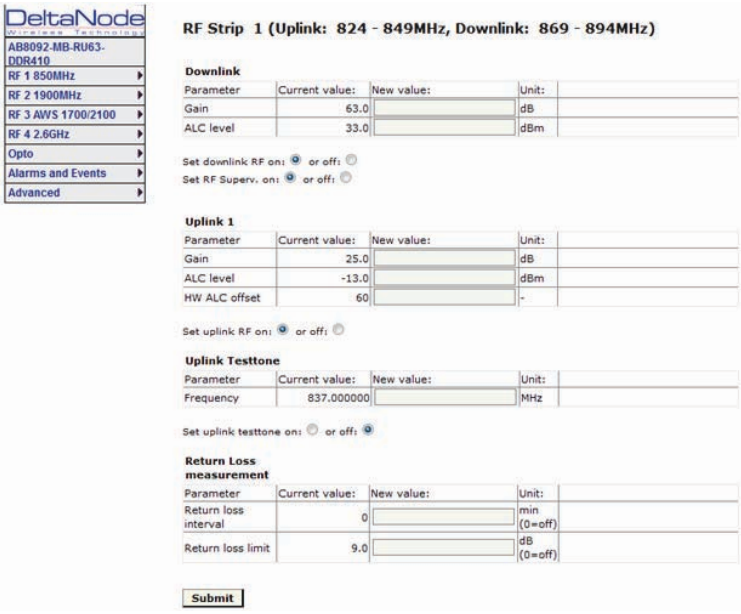


| Return Loss (db) | VSWR |
|---|---|
| 9.542 | 2.00 |
| 9.262 | 2.05 |
| 8.999 | 2.10 |
| 8.752 | 2.15 |
| 8.519 | 2.20 |
| 8.299 | 2.25 |
| 8.091 | 2.30 |
| 7.894 | 2.35 |
| 7.707 | 2.40 |
| 7.529 | 2.45 |
| 7.360 | 2.50 |
| 7.198 | 2.55 |
| 7.044 | 2.60 |
| 6.896 | 2.65 |
| 6.755 | 2.70 |
| 6.620 | 2.75 |
| 6.490 | 2.80 |
| 6.366 | 2.85 |
| 6.246 | 2.90 |
| 6.131 | 2.95 |
| 6.021 | 3.00 |

## FOR Opto Status

### Figure 96 FOR Opto Status

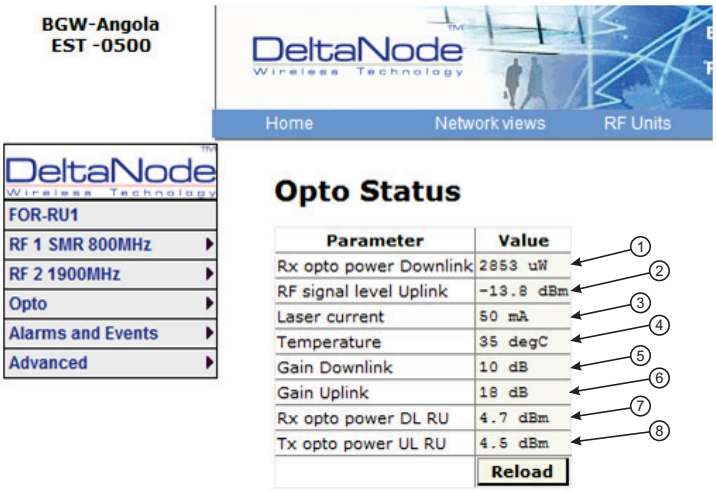


| Item | Description |
|---|---|
| 1 | Optical power received from the FOI. See item 1 in Figure 97 for measurement location. |
| 2 | Uplink signal being fed into the FOR uplink laser circuit. See item 2 in Figure 98 for measurement location. |
| 3 | Laser current for the Remote Unit FOR. Should be less than 50mA. |
| 4 | Temperature of the Remote Unit FOR board. |
| 5 | Total gain of the FOR in the downlink. Note that RF Out 1 and 2 are wide band (FM to 2600MHz) that feed band specific RF amplifiers in the following VGA stage. |
| 6 | Total gain of the FOR in the uplink path. Note that RF In1 and In2 are wide band (FM to 2600MHz) that are signals from the uplink frequency specific amplifiers. |
| 7 | Calculated downlink signal being received from the FOI. See item 1 in Figure 97 for measurement location. Takes into consideration optical wavelength and temperature compensation. |
| 8 | Calculated uplink signal being transmitted to the FOI (FOR input from VGA + FOR uplink gain/attenuation). See item 3 in Figure 98 for measurement location. |

### Figure 97 FOR Downlink Schematic

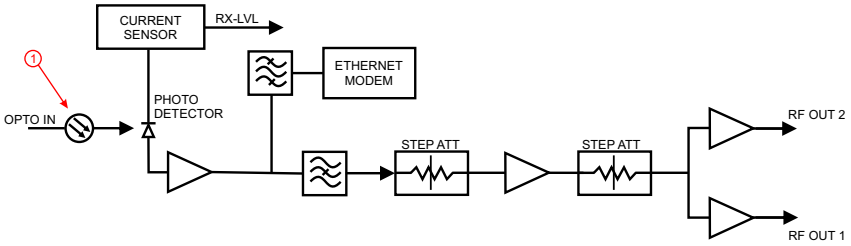

## Figure 98 FOR Uplink Schematic

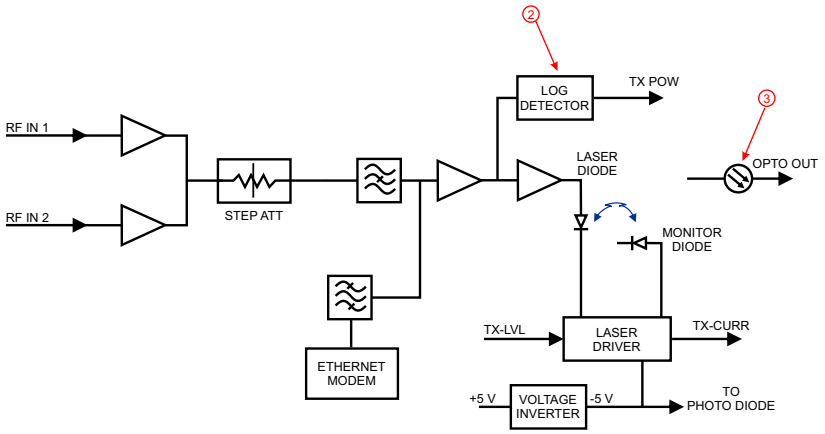

## FOR Opto Gain and Attenuation Settings

### *Figure 99 FOR Opto Gain Settings*

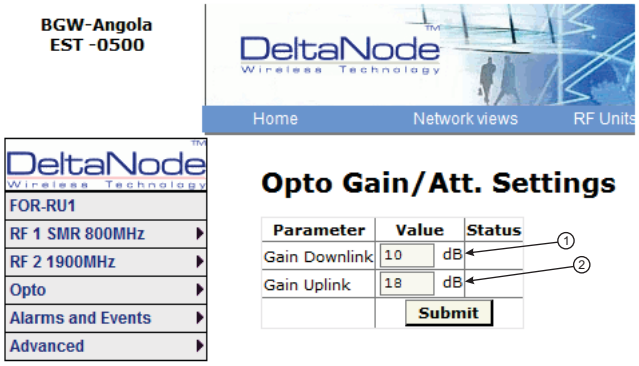


| Item | Description |
|---|---|
| 1 | FOR gain in the downlink path. Range is typically from -20 to +20. FOR downlink path has inherent/raw gain of +20dB (FM to 2600MHz).<br>• A setting of +20 indicates no attenuation so FOR will have +20dB gain (+20dB gain minus 0dB attenuation).<br>• A setting of +10 will have 10 of attenuation so this stage will have 10dBm of gain (+20dB gain minus 10dB of attenuation).<br>• A setting of 0 will have 20dB of attenuation so this stage will have unity gain (+20dB gain minus 20dB of attenuation).<br>• A setting of -10 will have 30dB of attenuation so this stage will have 10dB of loss (+20dB gain minus 30dB of attenuation).<br>• A setting of -20 will have 40dB of attenuation so this stage will have 20dB of loss (+20dB gain minus 40dB of attenuation). |
| 2 | FOR gain in the uplink path. Range is typically from 0 to +20dBm (FM to 2600MHz).<br>• A setting of +20 will have full gain of +20dBm.<br>• A setting of +10 will have +10dB gain.<br>• A setting of 0 will have no gain.<br>• Factory default should be used unless high loss in fiber. Note that changes in Gain uplink will require changes in the FOR UL ALC level. |

## FOR Fiber Network Settings

This page allows for manual override of network settings. Default configurations should be used with DHCP set to Yes.

**Note:** *Changing DHCP to "No" can cause loss of communications to the BIU and should only be used in very specific situations. Do not enter IP configuration data in other associated settings.*

### *Figure 100 FOR Network Settings*

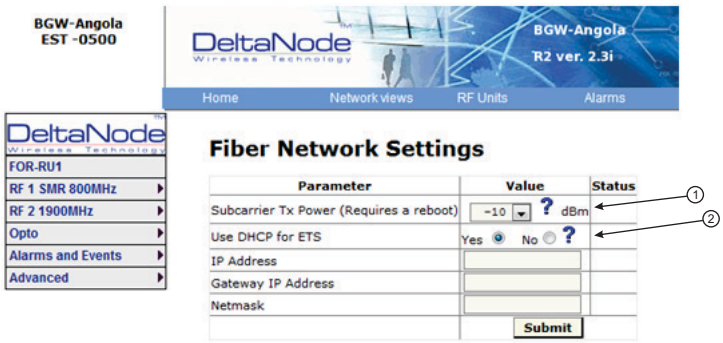


| ITem | Description |
|---|---|
| 1 | Subcarrier Tx Power is used for the communications and control signaling of the DAS. Default setting is -10. The value may need to be changed in situations where fiber loss is near the maximum and communications issues arise. Unnecessarily increasing the subcarrier TX power may affect RF performance of the DAS. |
| 2 | Default seeing of Yes should be used except for special applications. |

### *Figure 101 More FOR Network Settings*

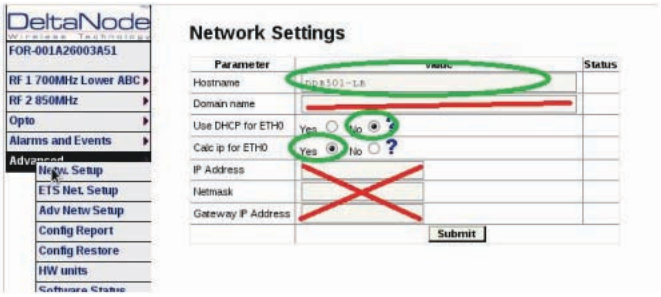


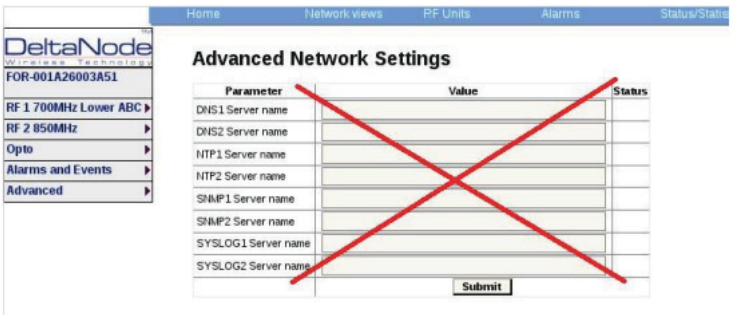

## FOR Application Handling

The application handling page allows for software reset and rebooting functions.

**Note:** *Only the Reboot command should be used by the technician. All other functions should only be used under supervision of Bird engineering as they may cause data corruption if not initiated properly.*

### Figure 102 FOR Application Handling

## Slave FOR

A Slave FOR is when a remote has a second FOR installed. The Slave FOR is most likely to be used when the remote is configured for MIMO or has multiple amplifiers in the same band or has redundant fiber.

Settings for the Slave FOR is the same as the main FOR except, “Calc ip for ETH0 is set to “No”.

### Figure 103 Slave FOR Network Settings

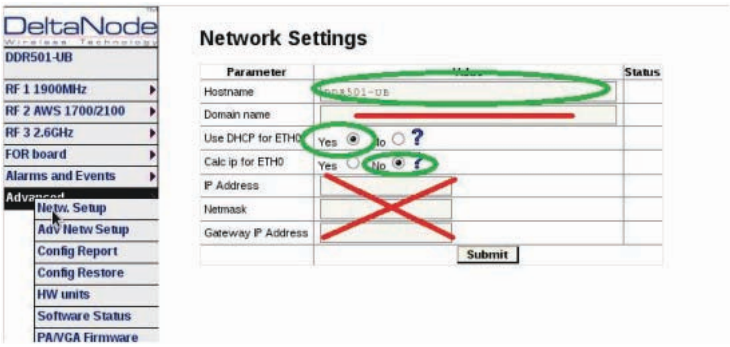

## Naming Components

Proper naming of individual components in the DAS is critical to troubleshooting. A recommendation is to start all component names with their function such as "BIU", "FOI" or "FOR". For example: "BIU-850Sector1".

You may use any combination of alphanumeric characters and the special character of dash "-". Do not use any other special characters or space.

- 0 through 9
- a through z
- A through Z
- -

Component names are limited to 56 characters.

1. Select the component to be named from the Configuration menu.

### *Figure 104 Component Selection*

2. Use the Locate Me button to verify which cards is being accessed.

### *Figure 105 Locate Me Button*

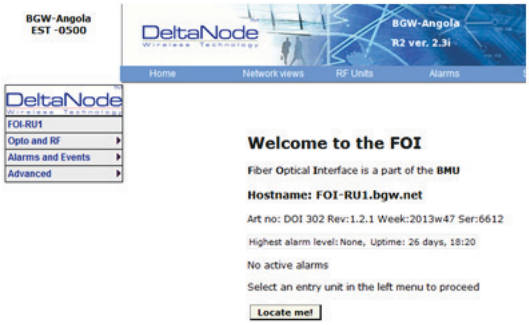


3. Go to Advanced>Netw Setup
4. Enter the new card name in the Host Name field. See Figure 106.
5. Select submit.

## Figure 106 Unit Naming

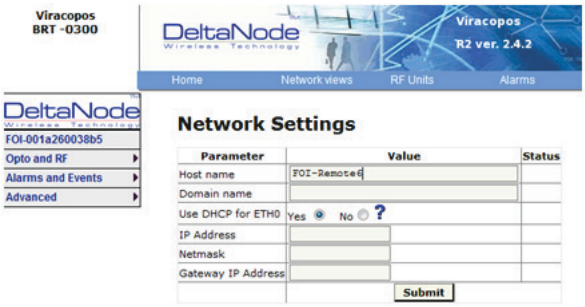


6. Go to Advanced > Appl restart.
7. Select the Reboot icon at the bottom of the menu. See Figure 107.
8. Select "YES- Restart Process"

**Note:** *After rebooting, it can take up to 5 minutes before the unit shows up in the GUI.*

## Figure 107 Naming Reboot

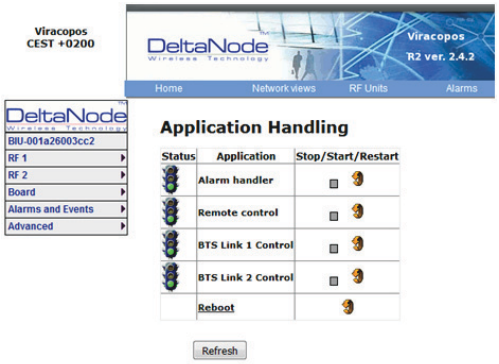


9. After all the units have been renamed, go to the Configuration menu and select the correct card type.
10. Highlight all the cards in the right column that had name changes and then select “<<“. Select “Submit” This will remove the old names from the DAS Configuration.
11. Highlight all the cards in the left column with the new names and then select “>>”. Select “Submit”. This will move the new card names into the DAS configuration.

## Table 69 Submit Newly Named Units

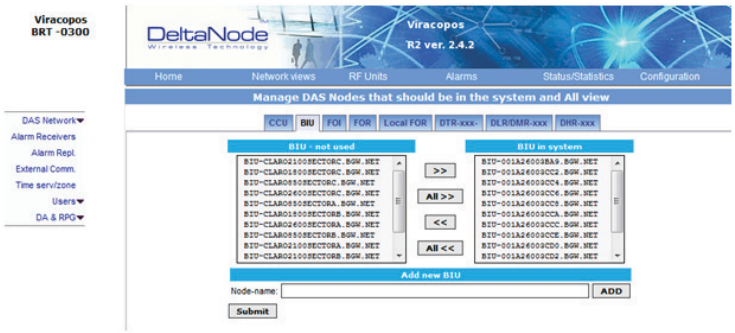


12. Select Network Views > All to confirm that all cards are now part of the configuration.

## Moving Remotes to Different FOI Port

All DAS components are assigned IP addresses by the BGW. The FOR in the Remote is the assigned an IP address as a subunit of the FOI to which it is connected. When the Remote is moved to a different FOI one of several actions must take place:

1. The lease on the Remote IP address must be given time to expire. This could take up to 30 minutes. Once the current IP lease expires, the new FOI will then assign the correct IP address to the Remote.
2. Manually power cycle the Remote. During the reboot process, the Remote will release the old IP address and have the correct IP address assigned by the new FOI.
3. Communications to the remote can only occur when the remote has the correct IP address. Before moving the fiber, access the FOR via the GUI. In the advanced settings, reboot the FOR. As soon as the reboot has been initiated, quickly move the head end fiber to the new FOI port. When the Remote finishes the rebooting process, the new FOI will assign the correct IP address.

## Replacing Master Unit Cards

All DAS components are assigned IP addresses by the BGW. When a card is replaced, the card must be assigned a new IP address by the BGW. On rare occasions, the BGW may have not be able to assign an IP address to the new card. This is easily corrected by removing the card from the Master Unit chassis (with ESD strap attached) and then re-install the card. The BGW will then assign the correct IP address.

## Moving Master Unit Cards

Occasionally, cards need to be moved to different slots in the Master Unit.

**CAUTION**
Always use an ESD strap when installation and removing cards. Failure to comply may result in permanent disabling damage to the module.

1. Move the card to the new slot.
2. Ensure there is an Ethernet connection for the new card location on the backplane of the Master Unit.
3. Wait for the card to complete the boot process. If the card remains in the boot process (Green LED remains on for approximately 2 seconds and then off for one second) then the IP address may not have been assigned. Check Ethernet connection.
4. Log into the GUI to confirm software connectivity. On occasions the card will not show up after being moved.
    a. Go to the Configuration menu and remove the card (move from right to left) and then Submit. See Figure 108 on page 95.
    b. Select the card from the left menu and then add it back to the system on the right and then submit.
    c. Go to the Home menu. Log out of the BGW and then log back in.
    d. Go to Network Views and log into the card to verify GUI connection.
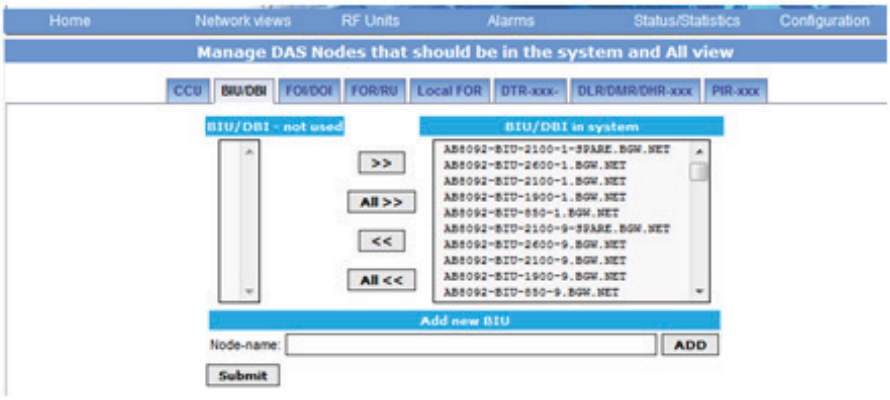
## Figure 108 Manage System Modules