USER'S MANUAL PN# 140806-00
REVISION NO# 00
DATE OF ISSUE# 2014-12-24

# RF Module
# USER'S MANUAL

**POSKOM Co., Ltd.**

**405, Unitech Ville Bldg., 1141-2, Baeksuk-dong, Goyang, Korea**
**Tel : +82–31–906–9007, Fax : +82–31–908–4208**
**http://www.poskom.com E-mail: sales@poskom.com**

# Content

**1. Hardware Specification ..... 2**

*1.1 Connector ..... 2*

*1.2 Status LED ..... 4*

*1.3 Schematic ..... 5*

**2. Setting ..... 9**

*2.1 Frequency Channel ..... 9*

*2.2 Net No. ..... 10*

*2.3 Option Function ..... 11*

**3. Communication Frame ..... 13**

*3.1 Transmit Frame ..... 13*

*3.2 ACK Frame ..... 13*

**4. I/O Signal Control ..... 14**

*4.1 Default Status ..... 14*

*4.2 Signal Control ..... 15*

*4.3 ALIVE Check MODE ..... 18*

*4.4 ERROR ..... 18*

**5. Supplement ..... 19**

*5.1 Label ..... 19*

*5.2 RF Communication Timing Chart ..... 20*

*5.3 Antenna ..... 24*

*5.4 Link Wire ..... 25*

**[ABBREVIATION]**

| | |
|---|---|
| **MAIN** | **R/F Main Module Communication** |
| **SUB** | **R/F Sub Module Communication** |

## RF Exposure Statement

This device and its antenna must not be collocated or operated in conjunction with any other Antenna or transmitter.

To comply with FCC RF exposure requirements. Only use supplied antenna.

Any unauthorized modification to the antenna or device could void the user's authority to operate this device.

## Product Description

This device is RF transceiver.
It sends and receives at frequency band between RF-1B(MAIN) and RF-2B(MAIN/SUB).
Both of MAIN and SUB are worked at 433.700MHz ~ 433.8875Mhz frequency band.
You can control this MHz frequency band in terms of 0.0125 MHz with SW2 of MAIN and SUB.

MAIN supplies Ready, Exposure information to SUB.
Hand Switch is connected to MAIN directly, and received Ready, Exposure information and sends it to SUB.
After receiving DR OK information from SUB, MAIN send Exposure signal to Portable x-ray unit.
Driving power is 5V, and it’s from Portable x-ray unit.

SUB supplies outside DR_OK information to MAIN.
After receiving Exposure signal from MAIN, it sends DR EXP IN information to outside.
And receive DR OK information from outside connection, and sends it to MAIN.
Driving power is 5V, and it’s from outside connection.

Transceiver module MD1 is wireless transceiver module at UHF frequency band, works with low current and low tension, and its variable and it has various properties.
This module designed to work easily at 433MHz frequency band.
Transceiver module MD1 uses regulation antenna at 433MHz frequency band.

| FCC ID | |
|---|---|
| RF-1B | **V5K–RF–1B** |
| RF-2B | **V5K–RF–2B** |
| Poskom Co., Ltd. | |

# 1. Hardware Specification

## 1.1 Connector

### 1) RF-1B(MAIN)

| Part_No | Specification | PIN | Remark |
|---|---|---|---|
| CN1 | DEK623PCB-TI (6P4C) | 01 Pin : GND | Connect to Hand S/W |
| | | 02 Pin : Exposure Signal (Hand S/W) | |
| | | 03 Pin : GND | |
| | | 04 Pin : Ready Signal (Hand S/W) | |
| CN2 | DEK623PCB-TI (6P6C) | 01 Pin : Not Use | Connect to Portable X-ray unit Hand S/W connector |
| | | 02 Pin : GND | |
| | | 03 Pin : DR-OK Signal (RF Module Main Signal - Exposure) | |
| | | 04 Pin : GND | |
| | | 05 Pin : Ready Signal (Hand S/W) | |
| | | 06 Pin : +5VDC | |
| JTAG1 | 53261-08P | 01 Pin : TCK | Firmware Download Connector |
| | | 02 Pin : GND | |
| | | 03 Pin : TDO | |
| | | 04 Pin : VCC | |
| | | 05 Pin : TMS | |
| | | 06 Pin : /RESET | |
| | | 07 Pin : TDI | |
| | | 08 Pin : GND | |

## 2) RF-2B(SUB)

| Part No. | Specification | PIN | Remark |
|---|---|---|---|
| CN1 | 53261-15P | 01 Pin : +5VDC | Input Voltage |
| | | 02 Pin : GND | |
| | | 03 Pin : RF ON Signal | Input Signal (MAIN Mode) |
| | | 04 Pin : Ready Signal (Hand S/W) | Input Signal (MAIN Mode) |
| | | 05 Pin : GND | |
| | | 06 Pin : Exposure Signal (Hand S/W) | Input Signal (MAIN Mode) |
| | | 07 Pin : DR-OK Signal | Input Signal (SUB Mode) |
| | | 08 Pin : Ready Signal | Output Signal (MAIN Mode) |
| | | 09 Pin : GND | |
| | | 10 Pin : DR-OK Signal | Output Signal (MAIN Mode) |
| | | 11 Pin : Ready Signal | Output Signal (SUB Mode) |
| | | 12 Pin : Exposure Signal | Output Signal (SUB Mode) |
| | | 13 Pin : RS232 - RX | RS232 RX |
| | | 14 Pin : RS232 - TX | RS232 TX |
| | | 15 Pin : GND | |
| JTAG1 | 53261-08P | 01 Pin : TCK | Firmware Download Connector |
| | | 02 Pin : GND | |
| | | 03 Pin : TDO | |
| | | 04 Pin : VCC | |
| | | 05 Pin : TMS | |
| | | 06 Pin : /RESET | |
| | | 07 Pin : TDI | |
| | | 08 Pin : GND | |

## 1.2 Status LED

### 1) RF-1B(MAIN)

| Symbol | LED No. | Color | Mean |
|---|---|---|---|
| COMM | LED5 | Green | RF MAIN, SUB Linked |
| ERROR | LED6 | Red | RF MAIN, SUB Communication Error |
| READY | LED7 | Orange | Input Hand S/W Ready |
| EXPOSURE | LED8 | Orange | Input Hand S/W Exposure |
| DR OK | LED9 | Red | Output Receive DR OK Signal |

**You can control On/Off of Ready, Exposure Status only with Hand S/W.**

### 2) RF-2B(SUB)

| Symbol | LED No. | Color | Mean |
|---|---|---|---|
| COMM | LED7 | Green | RF MAIN, SUB Linked |
| ERROR | LED8 | Red | RF MAIN, SUB Communication Error |
| DR OK | LED9 | Orange | Input DR OK Signal from DR System |
| READY | LED14 | Red | Output Receive Ready |
| EXPOSURE | LED15 | Red | Output Receive Exposure |

## 1.3 Schematic

## 2) PXMRF_2A ( SUB )

# 2. Setting

You can change Frequency Channel or Net No. and Option Function with DIP SW(SW1, SW2).
**( * If you changed SW1 status, do not forget to push RST1(Reset). )**

## 2.1 Frequency Channel

Initial frequency is configured to 433.7000MHz (Ch 01). If you would like other channels, you can change the channels with SW2 (1,2,3,4). There are totally 16 channels - No.1 (433.7000MHz)~ No.16(433.8875MHz) -, frequency of each channel interval is 0.0125MHz.

| Channel (Ch) | Frequency (MHz) | SW2 ( ■ = ON , □ = OFF ) | | | | | | | |
|---|---|---|---|---|---|---|---|---|---|
| | | 1 | 2 | 3 | 4 | 5 | 6 | 7 | 8 |
| 01 | *433.7000* | □ | □ | □ | □ | - | - | - | - |
| 02 | *433.7125* | ■ | □ | □ | □ | - | - | - | - |
| 03 | *433.7250* | □ | ■ | □ | □ | - | - | - | - |
| 04 | *433.7375* | ■ | ■ | □ | □ | - | - | - | - |
| 05 | *433.7500* | □ | □ | ■ | □ | - | - | - | - |
| 06 | *433.7625* | ■ | □ | ■ | □ | - | - | - | - |
| 07 | *433.7750* | □ | ■ | ■ | □ | - | - | - | - |
| 08 | *433.7875* | ■ | ■ | ■ | □ | - | - | - | - |
| 09 | *433.8000* | □ | □ | □ | ■ | - | - | - | - |
| 10 | *433.8125* | ■ | □ | □ | ■ | - | - | - | - |
| 11 | *433.8250* | □ | ■ | □ | ■ | - | - | - | - |
| 12 | *433.8375* | ■ | ■ | □ | ■ | - | - | - | - |
| 13 | *433.8500* | □ | □ | ■ | ■ | - | - | - | - |
| 14 | *433.8625* | ■ | □ | ■ | ■ | - | - | - | - |
| 15 | *433.8750* | □ | ■ | ■ | ■ | - | - | - | - |
| 16 | *433.8875* | ■ | ■ | ■ | ■ | - | - | - | - |

## 2.2 Net No.

Initial Net No. is configured to No.01. If you would like other Net No., you can change the Net No. with SW2 (5,6,7,8). There are totally 16 Net No. – No.01~ No.16 like channels. You can configure 16 Net No. with one channel.

| Net No. | SW2 ( ■ = ON , □ = OFF ) | | | | | | | |
|---|---|---|---|---|---|---|---|---|
| | 1 | 2 | 3 | 4 | 5 | 6 | 7 | 8 |
| **No. 01** | - | - | - | - | □ | □ | □ | □ |
| **No. 02** | - | - | - | - | ■ | □ | □ | □ |
| **No. 03** | - | - | - | - | □ | ■ | □ | □ |
| **No. 04** | - | - | - | - | ■ | ■ | □ | □ |
| **No. 05** | - | - | - | - | □ | □ | ■ | □ |
| **No. 06** | - | - | - | - | ■ | □ | ■ | □ |
| **No. 07** | - | - | - | - | □ | ■ | ■ | □ |
| **No. 08** | - | - | - | - | ■ | ■ | ■ | □ |
| **No. 09** | - | - | - | - | □ | □ | □ | ■ |
| **No. 10** | - | - | - | - | ■ | □ | □ | ■ |
| **No. 11** | - | - | - | - | □ | ■ | □ | ■ |
| **No. 12** | - | - | - | - | ■ | ■ | □ | ■ |
| **No. 13** | - | - | - | - | □ | □ | ■ | ■ |
| **No. 14** | - | - | - | - | ■ | □ | ■ | ■ |
| **No. 15** | - | - | - | - | □ | ■ | ■ | ■ |
| **No. 16** | - | - | - | - | ■ | ■ | ■ | ■ |

## 2.3 Option Function

1) RF-1B (SW1)

| Pin Number | Setting | Information | Remark |
|---|---|---|---|
| 1 | OFF | - | |
| | ON | Not Use | |
| 2 | OFF | - | |
| | ON | Not Use | |
| 3 | OFF | - | |
| | ON | Certification Test Mode use<br>(500ms RF COMM. Send) | |
| 4 | OFF | - | |
| | ON | - | |

2) RF-2B (SW1)

| Pin Number | Setting | Information | Remark |
|---|---|---|---|
| 1 | OFF | RF ON Signal Use | MAIN Mode Setting |
| | ON | RF ON Signal Not use | SUB Mode Setting |
| 2 | OFF | MAIN Mode Setting | |
| | ON | SUB Mode Setting | |
| 3 | OFF | - | |
| | ON | Certification Test Mode use<br>(500ms RF COMM. Send) | |
| 4 | OFF | - | |
| | ON | Ready Signal Control (to Portable) | |

3) RF-2B MAIN mode, SUB mode Chang

Dip Switch (SW1)

- MAIN Mode Set (Portable In type)

| Pin Number | Setting |
|---|---|
| 1 | OFF |
| 2 | OFF |
| 3 | OFF |
| 4 | OFF |

- SUB Mode Set (External Type)

| Pin Number | Setting |
|---|---|
| 1 | ON |
| 2 | ON |
| 3 | OFF |
| 4 | OFF |

4) RF-2B MAIN mode Ready Signal Control

Hand Switch(Ready Signal) ON the power to Portable X-ray Unit
Dip Switch (SW1) – Pin 4 ON (Off : Not Use)

| Pin Number | Setting |
|---|---|
| 1 | ON |
| 2 | ON |
| 3 | OFF |
| 4 | ON |

# 4. I/O Signal Control

## 4.1 Default Status

### 1) In case of turning RF-1B(MAIN) On

When RF-2B(SUB) power is OFF, as you turn RF-1B(MAIN) power On, **ERROR(LED6)** of RF-1B(MAIN) is turned on.

| Part | COMM | ERROR | READY | EXPOSURE | DR OK | - |
|---|---|---|---|---|---|---|
| | LED5 | LED6 | LED7 | LED8 | LED9 | - |
| RF-1B(MAIN) | OFF | ON | OFF | OFF | OFF | - |

| Part | COMM | ERROR | DR OK | - | READY | EXPOSURE |
|---|---|---|---|---|---|---|
| | LED7 | LED8 | LED9 | - | LED14 | LED15 |
| RF-2B(SUB) | OFF | OFF | OFF | - | OFF | OFF |

### 2) In case of turning RF-2B(SUB) On

When RF-1B(MAIN) power if OFF, as you turn RF-2B(SUB) power on, **ERROR(LED8)** of RF-2B(SUB) is turned on.

| Part | COMM | ERROR | READY | EXPOSURE | DR OK | - |
|---|---|---|---|---|---|---|
| | LED5 | LED6 | LED7 | LED8 | LED9 | - |
| RF-1B(MAIN) | OFF | OFF | OFF | OFF | OFF | - |

| Part | COMM | ERROR | DR OK | - | READY | EXPOSURE |
|---|---|---|---|---|---|---|
| | LED7 | LED8 | LED9 | - | LED14 | LED15 |
| RF-2B(SUB) | OFF | ON | OFF | - | OFF | OFF |

### 3) In case of turning RF-1B(MAIN) On in '1)'or '2)' status

① in case of RF-1B(MAIN) of '1)': **ERROR(LED6)** is turned off and **COMM(LED5)** is turned on within 5sec. **.**

② in case of RF-2B(SUB) of '2)': **ERROR(LED8)** is turned off and **COMM(LED7)** is turned on within 10sec.

| Part | COMM | ERROR | READY | EXPOSURE | DR OK | - |
|---|---|---|---|---|---|---|
| | LED5 | LED6 | LED7 | LED8 | LED9 | - |
| RF-1B(MAIN) | ON | OFF | OFF | OFF | OFF | - |

| Part | COMM | ERROR | DR OK | - | READY | EXPOSURE |
|---|---|---|---|---|---|---|
| | LED7 | LED8 | LED9 | - | LED14 | LED15 |
| RF-2B(SUB) | ON | OFF | OFF | - | OFF | OFF |

## 4.2 Signal Control

Whenever transmission connection status is normal between RF-1B(MAIN) and RF-2B(SUB) and there is a change on Hand S/W condition basically, Signal Control treats Signal by creating transmission Frame.

### 1) Ready Signal

① **RF-1B(MAIN)**

When Ready S/W of Hand S/W is pushed, Ready Signal is inputted to RF-1B(MAIN) and X-Ray Generator. Then, **READY(LED7)** of RF-1B(MAIN) is turned on, and MAIN creates transmission Frame about Ready Signal and transmit it to RF-2B(SUB). Then, it waits for Receipt OK(ACK) Signal of Ready Signal from RF-2B(SUB).

If it fails to receive Receipt OK(ACK) after transmitting Ready Signal, retry to transmit Ready Signal 5 times. If it fails again, considering it to Error, **ERROR(LED6)** is turned on.

- This is normal status when you push READY S/W of Hand S/W

| Part | COMM | ERROR | READY | EXPOSURE | DR OK | - |
|---|---|---|---|---|---|---|
| | LED5 | LED6 | LED7 | LED8 | LED9 | - |
| RF-1B(MAIN) | ON | OFF | ON | OFF | OFF | - |

- Status of not receiving Receipt OK(ACK) Signal according to Ready Signal transmission

| Part | COMM | ERROR | READY | EXPOSURE | DR OK | - |
|---|---|---|---|---|---|---|
| | LED5 | LED6 | LED7 | LED8 | LED9 | - |
| RF-1B(MAIN) | OFF | ON | ON | OFF | OFF | - |

② **RF-2B(SUB)**

When Ready Signal is received from RF-1B(MAIN), **READY(LED14)** is turned on. And SUB transmits Receipt OK(ACK) Signal of Ready Signal to RF-1B(MAIN).

- This is normal status of receiving Ready Signal

| Part | COMM | ERROR | DR OK | - | READY | EXPOSURE |
|---|---|---|---|---|---|---|
| | LED7 | LED8 | LED9 | - | LED14 | LED15 |
| RF-2B(SUB) | ON | OFF | OFF | - | ON | OFF |

## 2) Exposure Signal

When '1) Ready Signal' handling is finished and Ready S/W of Hand S/W and Exposure S/W are pushed, Exposure Signal is transmitted from RF-1B(MAIN) to RF-2B(SUB).

### ① RF-1B(MAIN)

When Exposure S/W of Hand S/W is pushed, **EXPOSURE(LED8)** is turned on, and MAIN creates transmission Frame about Exposure Signal, transmits it to RF-2B(SUB), and waits for Receipt OK(ACK) Signal from RF-2B(SUB).

If it fails to receive Receipt OK(ACK) for **240ms** after transmitting Exposure Signal, retry to send it 5 times. If it fails again, consider it to Error and **ERROR(LED6)** is turned on.

- This is normal status when you push Exposure S/W of Hand S/W. (in case of pushing Ready S/W)

| Part | COMM | ERROR | READY | EXPOSURE | DR OK | - |
|---|---|---|---|---|---|---|
| | LED5 | LED6 | LED7 | LED8 | LED9 | - |
| RF-1B(MAIN) | ON | OFF | ON | ON | OFF | - |

- This is no receipt status of Receipt OK(ACK) Signal from Exposure Signal transmission

| Part | COMM | ERROR | READY | EXPOSURE | DR OK | - |
|---|---|---|---|---|---|---|
| | LED5 | LED6 | LED7 | LED8 | LED9 | - |
| RF-1B(MAIN) | OFF | ON | ON | ON | OFF | - |

### ② RF-2B(SUB)

When Exposure Signal is received from RF-1B(MAIN), **EXPOSURE(LED15)** is turned on, and SUB transmits Receipt OK(ACK) Signal of Exposure Signal to RF-1B(MAIN).
At the same time, Exposure Trans Line 1,2 of **CN1-12Pin, 15Pin** are Closed, and give Exposure Signal to DR System. While Exposure S/W of Hand S/W is pushed, they are Closed, and when it is released, they become Open. (Signal of contacting point : On=Close, Off=Open)

If DR OK Signal is occurred from DR System, ignore Receipt OK(ACK) of Exposure Signal, and create transmission Frame of DR OK Signal and transmit it to RF-1B(MAIN). (refer to - '4.2-3)DR OK Signal')

- This is normal status of receiving Exposure Signal.

| Part | COMM | ERROR | DR OK | - | READY | EXPOSURE |
|---|---|---|---|---|---|---|
| | LED7 | LED8 | LED9 | - | LED14 | LED15 |
| RF-2B(SUB) | ON | OFF | OFF | - | ON | ON |

- In case of DR OK Signal

| Part | COMM | ERROR | DR OK | - | READY | EXPOSURE |
|---|---|---|---|---|---|---|
| | LED7 | LED8 | LED9 | - | LED14 | LED15 |
| RF-2B(SUB) | ON | OFF | ON | - | ON | ON |

### 3) DR OK Signal

When '2) Exposure Signal' handling is finished and, DR OK Signal occurs from DR System, DR OK Signal is transmitted from RF-2B(SUB) to RF-1B(MAIN).

**① RF-2B(SUB)**

If Exposure Signal maintains from RF-1B(MAIN), and DR OK Signal occurs from DR System, at the same time **DR OK(LED9)** is turned on, and SUB creates transmission Frame of DR OK Signal and transmits it to RF-1B(MAIN). Then, it waits for Receipt OK(ACK) Signal from RF-1B(MAIN).

If Receipt OK(ACK) Signal is not received for **240ms** after transmitting DR OK Signal, retry to transmit DR OK Signal 5 times. If it fails again, consider it to Error, then **ERROR(LED8)** is turned on.

- This is the status of DR OK Signal occurrence

| Part | COMM | ERROR | DR OK | - | READY | EXPOSURE |
|---|---|---|---|---|---|---|
| | LED7 | LED8 | LED9 | - | LED14 | LED15 |
| RF-2B(SUB) | ON | OFF | ON | - | ON | ON |

**② RF-1B(MAIN)**

When Hand S/W EXPOSURE is pushed and DR OK Signal is received from RF-2B(SUB) **DR OK(LED9)** is turned on, and MAIN transmits Receipt OK(ACK) Signal to RF-2B(SUB).
At the same time, send Exposure Signal to X-Ray Generator.

If Exposure S/W of Hand S/W is pushed and DR OK Signal is Off or out of transmission range in condition of received as RF-1B(MAIN), 5 sec. later, **COMM(LED5)** of RF-1B(MAIN) and **DR OK(LED9)** are turned off and **ERROR(LED6)** is turned on.

- This is normal status of receiving DR OK Signal (in case of, Ready S/W, Exposure S/W are pushed)

| Part | COMM | ERROR | READY | EXPOSURE | DR OK | - |
|---|---|---|---|---|---|---|
| | LED5 | LED6 | LED7 | LED8 | LED9 | - |
| RF-1B(MAIN) | ON | OFF | ON | ON | ON | - |

-RF-2B(SUB) Power Off or out of transmission range status during processing DR OK Signal receiving.

| Part | COMM | ERROR | READY | EXPOSURE | DR OK | - |
|---|---|---|---|---|---|---|
| | LED5 | LED6 | LED7 | LED8 | LED9 | - |
| RF-1B(MAIN) | OFF | ON | ON | ON | OFF | - |

## 4.3 ALIVE Check MODE

This is to check the transmission connection when there is no Hand S/W Signal in RF-1B(MAIN) or power is off in status of normal transmission connection between RF-1B(MAIN) and RF-2B(SUB).

### 1) RF-1B(MAIN)

In case that there is no Signal input of Ready S/W of Hand S/W or Exposure S/W for 5sec. MAIN transmits present Hand S/W condition (Ready, Exposure, Off) to RF-2B(SUB), then waits for its Receipt OK(ACK) Signal.

If it fails to receive Receipt OK(ACK) Signal, retry to transmit 5 times. If it fails again, considering it to Error, **COMM(LED5)** is turned off, and **ERROR(LED6)** is turned on.

### 2) RF-2B(SUB)

When there is no transmission Signal from RF-1B(MAIN) for 10sec., considering it to Error, **COMM(LED7)** is turned off and **ERROR(LED8)** is turned on.

## 4.4 ERROR

### 1) RF-1B(MAIN)

Whenever is there is a change in Hand S/W condition (Ready, Exposure, Off), MAIN transmits the condition to RF-2B(SUB). Or when there is no change in Hand S/W for 5sec. MAIN transmits present Hand S/W condition to (Alive check mode) and waits for its Receipt OK(ACK) Signal.
If it fails to receive Receipt OK(ACK) Signal, retry to transmit 5 times. If it fails again, considering it to ERROR, **COMM(LED5)** is turned off, and **ERROR(LED6)** is turned on.

### 2) RF-2B(SUB)

When there is no Signal for 10sec. after transmitting Receipt OK(ACK) Signal received from RF-1B(MAIN) or transmitting DR OK Signal to RF-1B (MAIN), **COMM(LED7)** is turned off and **ERROR(LED4)** is turned on.

### 3) ERROR release

When there is normal transmission connecting status after handling Error, RF-1B(MAIN) and RF-2B(SUB) - **ERROR(LED8)**- are turned off and **COMM(LED7)** is turned on.

# 5. Supplement

## 5.1 Label

### 1) RF-1B ( MAIN )

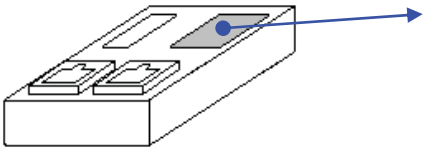

This Device Complies with FCC Rules Part 15.

Operation is subject to the following two conditions: (1) this device may not cause harmful interference and (2) this device must accept any interference that may be received including interference that may cause undesired operation.

| | |
|---|---|
| FCC ID | V5K - RF - 1B |
| S/N | |

**POSKOM Co., Ltd**

### 2) RF-2B ( SUB )

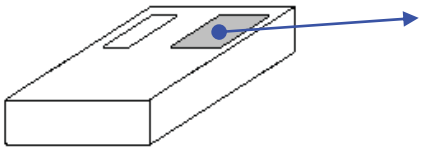

This Device Complies with FCC Rules Part 15.

Operation is subject to the following two conditions: (1) this device may not cause harmful interference and (2) this device must accept any interference that may be received including interference that may cause undesired operation.

| | |
|---|---|
| FCC ID | V5K - RF - 2B |
| S/N | 0912002 |

**POSKOM Co., Ltd**

## 5.4 Link Wire

CONFIDENTIAL

### HARNESS LIST

| No. | 품목명 | 규격 | 소요량 | 단위 | 구매처명 | 도면 번호 | 기 타 |
|---|---|---|---|---|---|---|---|
| 1 | CABLE | ASS'Y | 1 | EA | – | RF-MAIN-H01 | RF-1B |
| 2 | CABLE | ASS'Y | 1 | EA | – | RF-MAIN-H02 | RF-2B(MAIN) |
| 3 | CABLE | ASS'Y | 1 | EA | – | RF-SUB-H01 | RF-2B(SUB) |
| 4 | CABLE | ASS'Y | 1 | EA | – | RF-DOWNLOAD | Download |
| 5 | | | | | | | |
| 6 | | | | | | | |
| | | | | | | | |

*도면별로 각각 사용됨으로, 각각의 도면번호 발주 수량 확인 후 제작 필요함.

### History

| No. | DATE | Rev | 도면번호 | 변경내용 |
|---|---|---|---|---|
| 1 | 2014.03.25 | 00 | ALL | First |
| 2 | 2014.08.06 | 1 | ALL | RF-MAIN-H01 추가됨 |
| 3 | | | | |
| 4 | | | | |
| 5 | | | | |
| 6 | | | | |
| 7 | | | | |
| 8 | | | | |
| 9 | | | | |
| 10 | | | | |

| 결재 | 작성 | 검토 | 승인 | MODEL | REV | 01 |
|---|---|---|---|---|---|---|
| | | | | RF BOARD | DATE | 2014.08.06 |
| | / | / | / | Page : 1 / 7 | 도번 | List & History |

**RF-MAIN-H01**

RF Board – MAIN Cable

CONFIDENTIAL

| No | Wire | Color | Start Point | End Point | Length (mm) | Erorr Range | ETC |
|---|---|---|---|---|---|---|---|
| 6 | RJ12 Flat Cable (6P) | - | 6P6C 6Pin | 6P6C 6Pin | 150 | + 5mm | +5VDC |
| 5 | | - | 6P6C 5Pin | 6P6C 5Pin | | | Ready (Hand Switch) |
| 4 | | - | 6P6C 4Pin | 6P6C 4Pin | | | GND |
| 3 | | - | 6P6C 3Pin | 6P6C 3Pin | | | DR-OK (MAIN Output) |
| 2 | | - | 6P6C 2Pin | 6P6C 2Pin | | | GND |
| 1 | | - | 6P6C 1Pin | 6P6C 1Pin | | | Not Use |

| No | Part Name | Spec | Vender | Description | Q'ty | Remark |
|---|---|---|---|---|---|---|
| 1 | CONNECTOR | 6 Pin | Anyvender | 6P6C (RJ12) | 2 | |

| 결재 | 작성 | 검토 | 승인 | MODEL | REV | 01 |
|---|---|---|---|---|---|---|
| | | | | RF BOARD | DATE | 2014.08.06 |
| | / | / | / | Page : 2 / 7 | 도번 | RF-MAIN-H01 |

**RF-MAIN-H02**

RF Board – MAIN Cable

CONFIDENTIAL

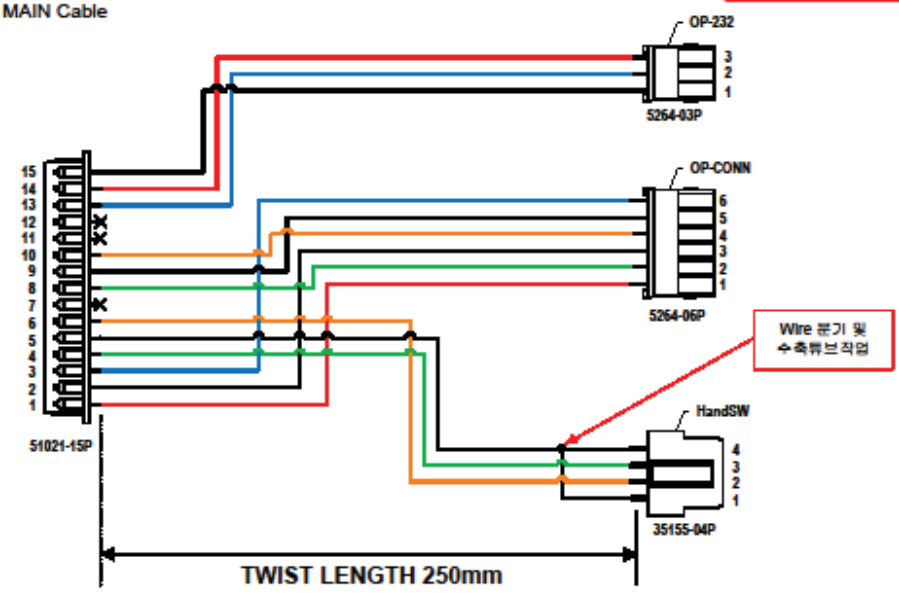


*Wire Length는 양쪽 5mm 탈피(10mm) 길이가 포함되어 있음

| No | Wire | Color | Start Point | End Point | Length (mm) | Erorr Range | ETC |
|---|---|---|---|---|---|---|---|
| 15 | UL1061 AWG26 | BLACK | 51021-15P 15Pin | 5264-03P 1Pin | 280 | + 5mm | |
| 14 | | RED | 51021-15P 14Pin | 5264-03P 3Pin | 280 | + 5mm | |
| 13 | | BLUE | 51021-15P 13Pin | 5264-03P 2Pin | 280 | + 5mm | |
| 12 | | Blink | | | | | |
| 11 | | Blink | | | | | |
| 10 | | ORANGE | 51021-15P 10Pin | 5264-06P 4Pin | 280 | + 5mm | |
| 9 | | BLACK | 51021-15P 09Pin | 5264-06P 5Pin | 280 | + 5mm | |
| 8 | | GREEN | 51021-15P 08Pin | 5264-06P 2Pin | 280 | + 5mm | |
| 7 | | Blink | | | | | |
| 6 | | ORANGE | 51021-15P 06Pin | 35155-04P 2Pin | 280 | + 5mm | |
| 5 | | BLACK | 51021-15P 05Pin | 35155-04P 4Pin | 280 | + 5mm | |
| | | BLACK | - | 35155-04P 1Pin | 60 | + 5mm | Wire 분기 및 수축튜브 |
| 4 | | GREEN | 51021-15P 04Pin | 35155-04P 3Pin | 280 | + 5mm | |
| 3 | | BLUE | 51021-15P 03Pin | 5264-06P 6Pin | 280 | + 5mm | |
| 2 | | BLACK | 51021-15P 02Pin | 5264-06P 3Pin | 280 | + 5mm | |
| 1 | | RED | 51021-15P 01Pin | 5264-06P 1Pin | 280 | + 5mm | |

| 결재 | 작성 | 검토 | 승인 | MODEL | REV | 01 |
|---|---|---|---|---|---|---|
| | | | | RF BOARD | DATE | 2014.08.06 |
| | / | / | / | Page : 3 / 7 | 도 번 | RF-MAIN-H01(1/2) |

**RF-MAIN-H01**

RF Board – MAIN Cable

CONFIDENTIAL

| No | Part Name | Spec | Vender | Description | Q'ty | Remark |
|---|---|---|---|---|---|---|
| 1 | CONNECTOR | 15 Pin | MOLEX | 51021-15P | 1 | |
| 2 | CONNECTOR | 3 Pin | MOLEX | 5264-03P | 1 | Lable : OP-232 |
| 3 | CONNECTOR | 6 Pin | MOLEX | 5264-06P | 1 | Label : OP-CONN |
| 4 | CONNECTOR | 4 Pin | MOLEX | 35155-04P | 2 | Label : HandSW |
| 5 | Crimp Terminal | Female AWG26,28 | MOLEX | 50079 | 12 | - |
| 6 | Crimp Terminal | Female AWG22,24,26,28 | MOLEX | 5263 | 9 | - |
| 7 | Crimp Terminal | Female AWG22,24,26,28 | MOLEX | 5103 | 4 | - |

| 결재 | 작성 | 검토 | 승인 | MODEL | REV | 01 |
|---|---|---|---|---|---|---|
| | | | | RF BOARD | DATE | 2014.08.06 |
| | / | / | / | Page : 4 / 7 | 도번 | RF-MAIN-H01(2/2) |

**RF-SUB-H01**

RF Board – SUB Cable (IDEXX)

CONFIDENTIAL

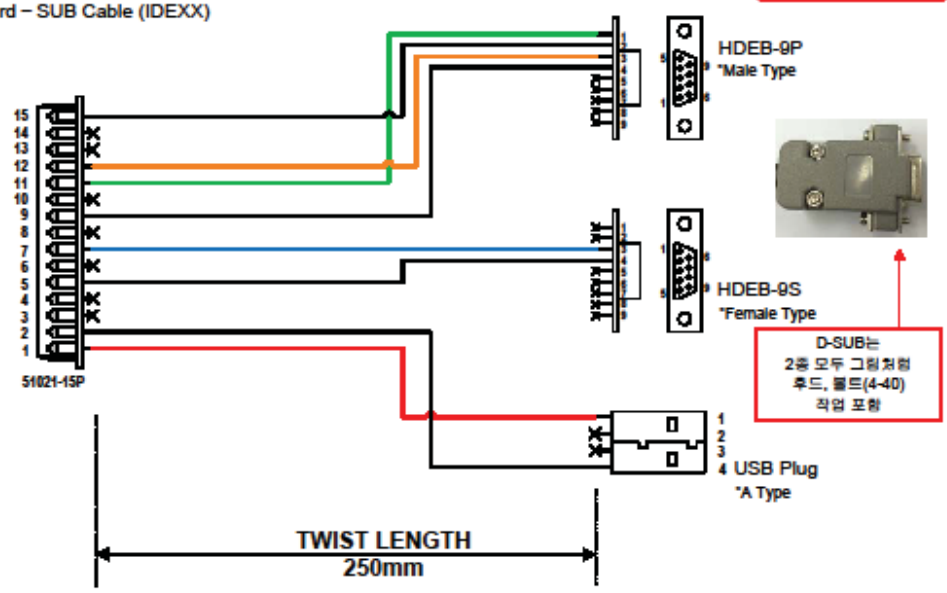


*Wire Length는 양쪽 5mm 탈피(10mm) 길이가 포함되어 있음

| No | Wire | Color | Start Point | End Point | Length (mm) | Erorr Range | ETC |
|---|---|---|---|---|---|---|---|
| 15 | UL1061 AWG26 | BLACK | 51021-15P 15Pin | HDEB-9P 2Pin | 280 | + 5mm | |
| 14 | | Blink | | | | | |
| 13 | | Blink | | | | | |
| 12 | | ORANGE | 51021-15P 12Pin | HDEB-9P 3Pin | 280 | + 5mm | |
| 11 | | GREEN | 51021-15P 11Pin | HDEB-9P 1Pin | 280 | + 5mm | |
| 10 | | Blink | | | | | |
| 9 | | BLACK | 51021-15P 09Pin | HDEB-9P 4Pin | 280 | + 5mm | |
| 8 | | Blink | | | | | |
| 7 | | BLUE | 51021-15P 07Pin | HDEB-9S 3Pin | 280 | + 5mm | |
| 6 | | Blink | | | | | |
| 5 | | BLACK | 51021-15P 05Pin | HDEB-9S 4Pin | 280 | + 5mm | |
| 4 | | Blink | | | | | |
| 3 | | Blink | | | | | |
| 2 | | BLACK | 51021-15P 02Pin | USB A Plug 4Pin | 280 | + 5mm | |
| 1 | | RED | 51021-15P 01Pin | USB A Plug 1Pin | 280 | + 5mm | |

| 결재 | 작성 | 검토 | 승인 | MODEL | REV | 01 |
|---|---|---|---|---|---|---|
| | | | | RF BOARD | DATE | 2014.08.06 |
| | / | / | / | Page : 5 / 7 | 도 번 | RF-SUB-H01(1/2) |

## RF-SUB-H01

CONFIDENTIAL

RF Board – SUB Cable (IDEXX)

| No | Part Name | Spec | Vender | Description | Q'ty | Remark |
|---|---|---|---|---|---|---|
| 1 | CONNECTOR | 15 Pin | MOLEX | 51021-15P | 1 | |
| 2 | CONNECTOR | 9 Pin Male Type<br>후드, 볼트(4-40) 포함 | HIROSE | HDEB-9P | 1 | Label : 'X-ray Signal' |
| 3 | CONNECTOR | 9 Pin Female Type<br>후드, 볼트(4-40) 포함 | HIROSE | HDEB-9S | 1 | Label : 'FPD Signal' |
| 4 | CONNECTOR | 4 Pin | Anyvender | USB A Type Pulg | 1 | |
| 5 | Crimp Terminal | Femal<br>AWG26,28 | MOLEX | 50079 | 8 | - |

*RF-SUB-H01 후작업 : 그물망, 수축튜브, 후드작업(볼트포함)

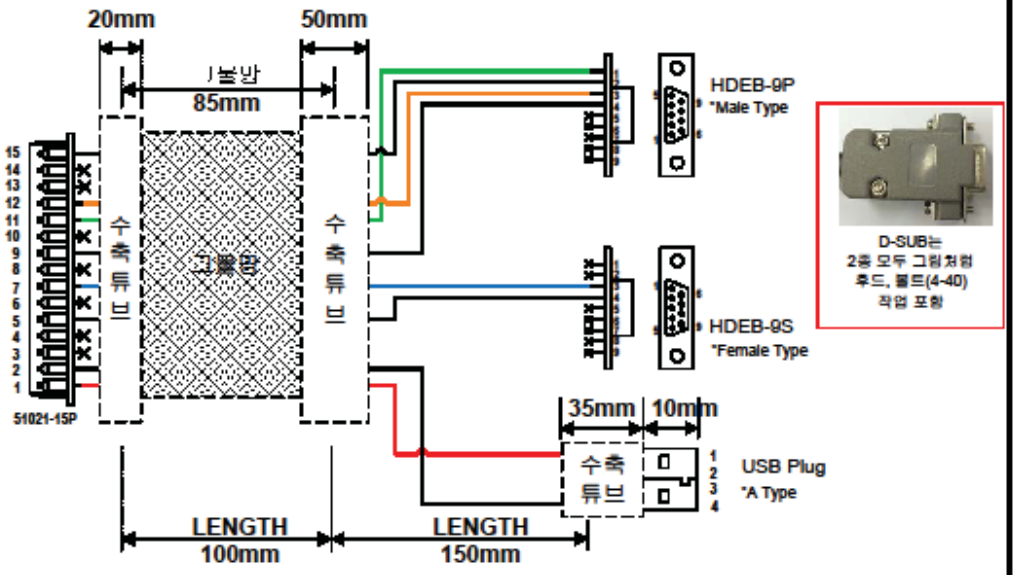


*USB Pin 번호에 주의(1Pin : Red, 4Pin : Black)

*USB 수축튜브 작업 주의(USB 끝 10mm 공간 확보)

| 결재 | 작성 | 검토 | 승인 | MODEL | REV | 01 |
|---|---|---|---|---|---|---|
| | | | | RF BOARD | DATE | 2014.08.06 |
| | / | / | / | Page : 6 / 7 | 도 번 | RF-SUB-H02(2/2) |

## RF-DOWNLOAD

JTAG Download Cable

CONFIDENTIAL

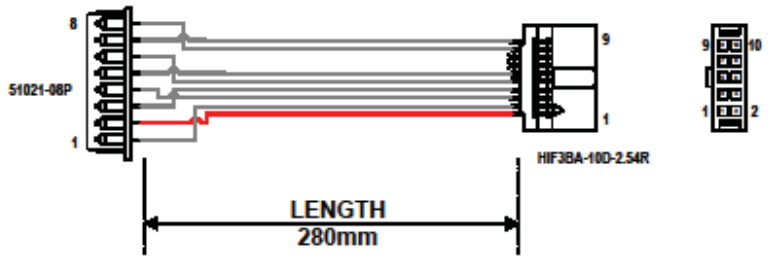


*Wire Length는 양쪽 5mm 탈피(10mm) 길이가 포함되어 있음

| No | Wire | Color | Start Point | End Point | Length (mm) | Erorr Range | ETC |
|---|---|---|---|---|---|---|---|
| 8 | FLAT CABLE | GRAY | 51021-08P 8Pin | HIF3BA-10D 9Pin | 300 | + 5mm | |
| 7 | | GRAY | 51021-08P 7Pin | HIF3BA-10D 10Pin | 300 | + 5mm | |
| 6 | | GRAY | 51021-08P 6Pin | HIF3BA-10D 5Pin | 300 | + 5mm | |
| 5 | | GRAY | 51021-08P 5Pin | HIF3BA-10D 6Pin | 300 | + 5mm | |
| 4 | | GRAY | 51021-08P 4Pin | HIF3BA-10D 3Pin | 300 | + 5mm | |
| 3 | | GRAY | 51021-08P 3Pin | HIF3BA-10D 4Pin | 300 | + 5mm | |
| 2 | | GRAY | 51021-08P 2Pin | HIF3BA-10D 1Pin | 300 | + 5mm | |
| 1 | | RED | 51021-08P 1Pin | HIF3BA-10D 2Pin | 300 | + 5mm | |

| No | Part Name | Spec | Vender | Description | Q'ty | Remark |
|---|---|---|---|---|---|---|
| 1 | CONNECTOR | 8 Pin | MOLEX | 51021-08P | 1 | |
| 2 | CONNECTOR | 10 Pin | HIROSE | HIF3BA-10D-2.54R | 1 | Label : 'X-ray Signal' |
| 5 | Crimp Terminal | Femal AWG26,28 | MOLEX | 50079 | 8 | - |

| 결재 | 작성 | 검토 | 승인 | MODEL | REV | 01 |
|---|---|---|---|---|---|---|
| | | | | RF BOARD | DATE | 2014.08.06 |
| | / | / | / | Page : 7 / 7 | 도 번 | RF-DOWNLOAD |

## <FCC NOTICE>

***WARNING:*** *This equipment may generate or use radio frequency energy. Changes or modifications to this equipment may cause harmful interference unless the modifications are expressly approved in the instruction manual. The user could lose the authority to operate this equipment if an unauthorized change or modification is made.*

This device complies with part 15 of the FCC Rules. Operation is subject to the following two conditions: (1) This device may not cause harmful interference, and (2) this device must accept any interference received, including interference that may cause undesired operation.

NOTE: This equipment has been tested and found to comply with the limits for a Class B digital device, pursuant to part 15 of the FCC Rules. These limits are designed to provide reasonable protection against harmful interference in a residential installation. This equipment generates, uses and can radiate radio frequency energy and, if not installed and used in accordance with the instructions, may cause harmful interference to radio communications. However, there is no guarantee that interference will not occur in a particular installation. If this equipment does cause harmful interference to radio or television reception, which can be determined by turning the equipment off and on, the user is encouraged to try to correct the interference by one or more of the following measures:

—Reorient or relocate the receiving antenna.

—Increase the separation between the equipment and receiver.

—Connect the equipment into an outlet on a circuit different from that to which the receiver is connected.

—Consult the dealer or an experienced radio/TV technician for help.