FCC RF Test Report

APPLICANT	:	**PAX Technology Limited**
EQUIPMENT	:	**Smart Tablet**
BRAND NAME	:	**PAX**
MODEL NAME	:	**Aries6**
FCC ID	:	**V5PAR6**
STANDARD	:	**47 CFR Part 2, 22(H), 24(E), 27(L), 27(H)**
CLASSIFICATION	:	**PCS Licensed Transmitter (PCB)**

The product was received on Apr. 11, 2019 and completely tested on May 26, 2019. We, Sporton International (KunShan) Inc., would like to declare that the tested sample has been evaluated in accordance with the procedures given in ANSI C63.26-2015 and shown compliance with the applicable technical standards.

The test results in this report apply exclusively to the tested model / sample. Without written approval of Sporton International (KunShan) Inc., the test report shall not be reproduced except in full.

Jason Jia

Reviewed by: Jason Jia / Supervisor

James Huang

Approved by: James Huang / Manager

ACCREDITED
Cert #5145.02

Sporton International (Kunshan) Inc.

No. 1098, Pengxi North Road, Kunshan Economic Development Zone Jiangsu Province 215300 People's Republic of China

TABLE OF CONTENTS

REVISION HISTORY **3**

SUMMARY OF TEST RESULT **4**

1 GENERAL DESCRIPTION **5**

1.1 Applicant 5
1.2 Manufacturer 5
1.3 Product Feature of Equipment Under Test 5
1.4 Product Specification of Equipment Under Test 6
1.5 Modification of EUT 6
1.6 Maximum ERP/EIRP Power, Frequency Tolerance, and Emission Designator 7
1.7 Testing Location 8
1.8 Applicable Standards 8

2 TEST CONFIGURATION OF EQUIPMENT UNDER TEST **9**

2.1 Test Mode 9
2.2 Connection Diagram of Test System 10
2.3 Support Unit used in test configuration and system 10
2.4 Frequency List of Low/Middle/High Channels 11

3 CONDUCTED TEST ITEMS **13**

3.1 Measuring Instruments 13
3.2 Test Setup 13
3.3 Test Result of Conducted Test 13
3.4 Conducted Output Power and ERP/EIRP 14

4 RADIATED TEST ITEMS **15**

4.1 Measuring Instruments 15
4.2 Test Setup 15
4.3 Test Result of Radiated Test 15
4.4 Radiated Spurious Emission 16

5 LIST OF MEASURING EQUIPMENT **17**

6 UNCERTAINTY OF EVALUATION **18**

APPENDIX A. TEST RESULTS OF CONDUCTED TEST

APPENDIX B. TEST RESULTS OF RADIATED TEST

APPENDIX C. TEST SETUP PHOTOGRAPHS

REVISION HISTORY

REPORT NO.	VERSION	DESCRIPTION	ISSUED DATE
FG941109B	Rev. 01	Initial issue of report	Aug. 02, 2019

SUMMARY OF TEST RESULT

Report Section	FCC Rule	Description	Limit	Result	Remark
3.4	§2.1046	Conducted Output Power	Reporting Only	PASS	-
	§22.913(a)(5)	Effective Radiated Power (Band 5)	ERP < 7 Watt	PASS	-
	§27.50(b)(10) §27.50(c)(10)	Effective Radiated Power (Band 12) (Band 17)	ERP < 3 Watt	PASS	-
	§24.232(c)	Equivalent Isotropic Radiated Power (Band 2)	EIRP < 2Watt	PASS	-
	§27.50(d)(4)	Equivalent Isotropic Radiated Power (Band 4)	EIRP < 1Watt	PASS	-
3.5	§24.232(d)	Peak-to-Average Ratio	<13 dB	PASS	1
3.6	§2.1049	Occupied Bandwidth	Reporting Only	PASS	1
3.7	§2.1051 §22.917(a) §24.238(a) §27.53(g) §27.53(h)	Conducted Band Edge Measurement (Band 2) (Band 4) (Band 5) (Band 12) (Band 17)	< 43+10log10(P[Watts])	PASS	1
3.8	§2.1051 §22.917(a) §24.238(a) §27.53(g) §27.53(h)	Conducted Spurious Emission (Band 2) (Band 4) (Band 5) (Band 12) (Band 17)	< 43+10log10(P[Watts])	PASS	1
3.9	§2.1055 §22.355	Frequency Stability Temperature & Voltage	< 2.5 ppm for Part 22H	PASS	1
	§2.1055 §24.235 §27.54		Within Authorized Band		
4.4	§2.1053 §22.917(a) §24.238(a) §27.53(g) §27.53(h)	Radiated Spurious Emission (Band 2) (Band 4) (Band 5) (Band 12) (Band 17)	< 43+10log$_{10}$(P[Watts])	PASS	Under limit 19.59 dB at 2110.000 MHz

Remark 1: The conducted test items were leverage from module RF report which can refer to Report No. "RF160714W002-1" for Part 22H, Report No. "RF160714W002-2" for Part 24E and Report No. "RF160714W002-3" for Part 27L, 27H.

1 General Description

1.1 Applicant

PAX Technology Limited
Room 2416, 24/F., Sun Hung Kai Centre, 30 Harbour Road, Wanchai, Hong Kong

1.2 Manufacturer

PAX Computer Technology (Shenzhen) Co., Ltd.
4/F, No.3 Building, Software Park, Second Central Science-Tech Road, High-Tech industrial Park, Shenzhen, Guangdong, P.R.C.

1.3 Product Feature of Equipment Under Test

Product Feature	
Equipment	Smart Tablet
Brand Name	PAX
Model Name	Aries6
FCC ID	V5PAR6
EUT supports Radios application	WCDMA/HSPA/DC-HSDPA/HSPA+(16QAM uplink is not supported)/LTE/GPS/NFC WLAN 2.4GHz 802.11b/g/n HT20 WLAN 5GHz 802.11a/n HT20/HT40 WLAN 5GHz 802.11ac VHT20/VHT40/VHT80 Bluetooth BR/EDR/LE
IMEI Code	Radiation : 866732039393468
HW Version	N/A
SW Version	N/A
EUT Stage	Production Unit

1.4 Product Specification of Equipment Under Test

Standards-related Product Specification	
Tx Frequency	LTE Band 2 : 1850.7 MHz ~ 1909.3 MHz LTE Band 4 : 1710.7 MHz ~ 1754.3 MHz LTE Band 5 : 824.7 MHz ~ 848.3 MHz LTE Band 12 : 699.7 MHz ~ 715.3 MHz LTE Band 17 : 706.5 MHz ~ 713.5 MHz
Rx Frequency	LTE Band 2 : 1930.7 MHz ~ 1989.3 MHz LTE Band 4 : 2110.7 MHz ~ 2154.3 MHz LTE Band 5 : 869.7 MHz ~ 893.3 MHz LTE Band 12 : 729.7 MHz ~ 745.3 MHz LTE Band 17 : 736.5 MHz ~ 743.5 MHz
Bandwidth	LTE Band 2 : 1.4MHz / 3MHz / 5MHz / 10MHz / 15MHz / 20MHz LTE Band 4 : 1.4MHz / 3MHz / 5MHz / 10MHz / 15MHz / 20MHz LTE Band 5 : 1.4MHz / 3MHz / 5MHz / 10MHz LTE Band 12 : 1.4MHz / 3MHz / 5MHz / 10MHz LTE Band 17 : 5MHz / 10MHz
Maximum Output Power to Antenna	LTE Band 2 : 22.07 dBm LTE Band 4 : 21.89 dBm LTE Band 5 : 23.17 dBm LTE Band 12 : 22.96 dBm LTE Band 17 : 22.46 dBm
Antenna Gain	LTE Band 2 : 2.00 dBi LTE Band 4 : 1.50 dBi LTE Band 5 : 1.50 dBi LTE Band 12 : 1.50 dBi LTE Band 17 : 1.50 dBi
Type of Modulation	QPSK / 16QAM

1.5 Modification of EUT

No modifications are made to the EUT during all test items.

1.6 Maximum ERP/EIRP Power, Frequency Tolerance, and Emission Designator

LTE Band 2		QPSK			16QAM		
BW (MHz)	Frequency Range (MHz)	Emission Designator (99%OBW)	Frequency Tolerance (ppm)	Maximum EIRP(W)	Emission Designator (99%OBW)	Frequency Tolerance (ppm)	Maximum EIRP(W)
1.4	1850.7 ~ 1909.3	-	-	0.2547	-	-	0.2291
3	1851.5 ~ 1908.5	-	-	0.2553	-	-	0.2109
5	1852.5 ~ 1907.5	-	-	0.2553	-	-	0.2046
10	1855.0 ~ 1905.0	-	-	0.2541	-	-	0.2080
15	1857.5 ~ 1902.5	-	-	0.2535	-	-	0.2183
20	1860.0 ~ 1900.0	-	-	0.2553	-	-	0.2080
LTE Band 4		**QPSK**			**16QAM**		
BW (MHz)	**Frequency Range (MHz)**	**Emission Designator (99%OBW)**	**Frequency Tolerance (ppm)**	**Maximum EIRP(W)**	**Emission Designator (99%OBW)**	**Frequency Tolerance (ppm)**	**Maximum EIRP(W)**
1.4	1710.7 ~ 1754.3	-	-	0.2148	-	-	0.1667
3	1711.5 ~ 1753.5	-	-	0.2158	-	-	0.1611
5	1712.5 ~ 1752.5	-	-	0.2178	-	-	0.1603
10	1715.0 ~ 1750.0	-	-	0.2070	-	-	0.1596
15	1717.5 ~ 1747.5	-	-	0.2128	-	-	0.1656
20	1720.0 ~ 1745.0	-	-	0.2183	-	-	0.1675
LTE Band 5		**QPSK**			**16QAM**		
BW (MHz)	**Frequency Range (MHz)**	**Emission Designator (99%OBW)**	**Frequency Tolerance (ppm)**	**Maximum ERP(W)**	**Emission Designator (99%OBW)**	**Frequency Tolerance (ppm)**	**Maximum ERP(W)**
1.4	824.7 ~ 848.3	-	-	0.1778	-	-	0.1545
3	825.5 ~ 847.5	-	-	0.1778	-	-	0.1435
5	826.5 ~ 846.5	-	-	0.1778	-	-	0.1439
10	829.0 ~ 844.0	-	-	0.1786	-	-	0.1445
LTE Band 12		**QPSK**			**16QAM**		
BW (MHz)	**Frequency Range (MHz)**	**Emission Designator (99%OBW)**	**Frequency Tolerance (ppm)**	**Maximum ERP(W)**	**Emission Designator (99%OBW)**	**Frequency Tolerance (ppm)**	**Maximum ERP(W)**
1.4	699.7 ~ 715.3	-	-	0.1671	-	-	0.1365
3	700.5 ~ 714.5	-	-	0.1675	-	-	0.1361
5	701.5 ~ 713.5	-	-	0.1687	-	-	0.1303
10	704.0 ~ 711.0	-	-	0.1702	-	-	0.1337

LTE Band 17		QPSK			16QAM		
BW (MHz)	Frequency Range (MHz)	Emission Designator (99%OBW)	Frequency Tolerance (ppm)	Maximum ERP(W)	Emission Designator (99%OBW)	Frequency Tolerance (ppm)	Maximum ERP(W)
5	706.5 ~ 713.5	-	-	0.1687	-	-	0.1303
10	709.0 ~ 711.0	-	-	0.1702	-	-	0.1337

1.7 Testing Location

Sporton International (Kunshan) Inc. is accredited to ISO/IEC 17025:2017 by American Association for Laboratory Accreditation with Certificate Number 5145.02.

Test Firm	Sporton International (Kunshan) Inc.		
Test Site Location	No. 1098, Pengxi North Road, Kunshan Economic Development Zone Jiangsu Province 215300 People's Republic of China TEL : +86-512-57900158 FAX : +86-512-57900958		
Test Site No.	**Sporton Site No.**	**FCC Designation No.**	**FCC Test Firm Registration No.**
	03CH06-KS	CN1257	314309

1.8 Applicable Standards

According to the specifications of the manufacturer, the EUT must comply with the requirements of the following standards:

- 47 CFR Part 2, 22(H), 24(E), 27(L), 27(H)
- ANSI C63.26-2015
- FCC KDB 971168 D01 Power Meas License Digital Systems v03r01
- FCC KDB 412172 D01 Determining ERP and EIRP v01r01

Remark:

1. All test items were verified and recorded according to the standards and without any deviation during the test.
2. This EUT has also been tested and complied with the requirements of FCC Part 15, Subpart B, recorded in a separate test report.

2 Test Configuration of Equipment Under Test

2.1 Test Mode

Antenna port conducted and radiated test items listed below are performed according to KDB 971168 D01 Power Meas License Digital Systems v03r01 with maximum output power.

Radiated measurements are performed by rotating the EUT in three different orthogonal test planes to find the maximum emission.

Test Items	Band	Bandwidth (MHz)						Modulation			RB #			Test Channel		
		1.4	3	5	10	15	20	QPSK	16QAM	64QAM	1	Half	Full	L	M	H
Max. Output Power	2	v	v	v	v	v	v	v	v	-	v	v	v	v	v	v
	4	v	v	v	v	v	v	v	v	-	v	v	v	v	v	v
	5	v	v	v	v	-	-	v	v	-	v	v	v	v	v	v
	12	v	v	v	v	-	-	v	v	-	v	v	v	v	v	v
	17	-	-	v	v	-	-	v	v	-	v	v	v	v	v	v
E.R.P / E.I.R.P	2	v	v	v	v	v	v	v	v	-	v			v	v	v
	4	v	v	v	v	v	v	v	v	-	v			v	v	v
	5	v	v	v	v	-	-	v	v	-	v			v	v	v
	12	v	v	v	v	-	-	v	v	-	v			v	v	v
Radiated Spurious Emission	2	Worst Case												v	v	v
	4	Worst Case												v	v	v
	5	Worst Case												v	v	v
	12	Worst Case												v	v	v
Note	1. The mark "**v** " means that this configuration is chosen for testing 2. The mark "-" means that this bandwidth is not supported. 3. The device is investigated from 30MHz to 10 times of fundamental signal for radiated spurious emission test under different RB size/offset and modulations in exploratory test. Subsequently, only the worst case emissions are reported. 4. LTE Band 12 overlaps the entire frequency range of LTE Band 17. Therefore, the test results provided in this report covers Band 12 as well as Band 17.															

2.2 Connection Diagram of Test System

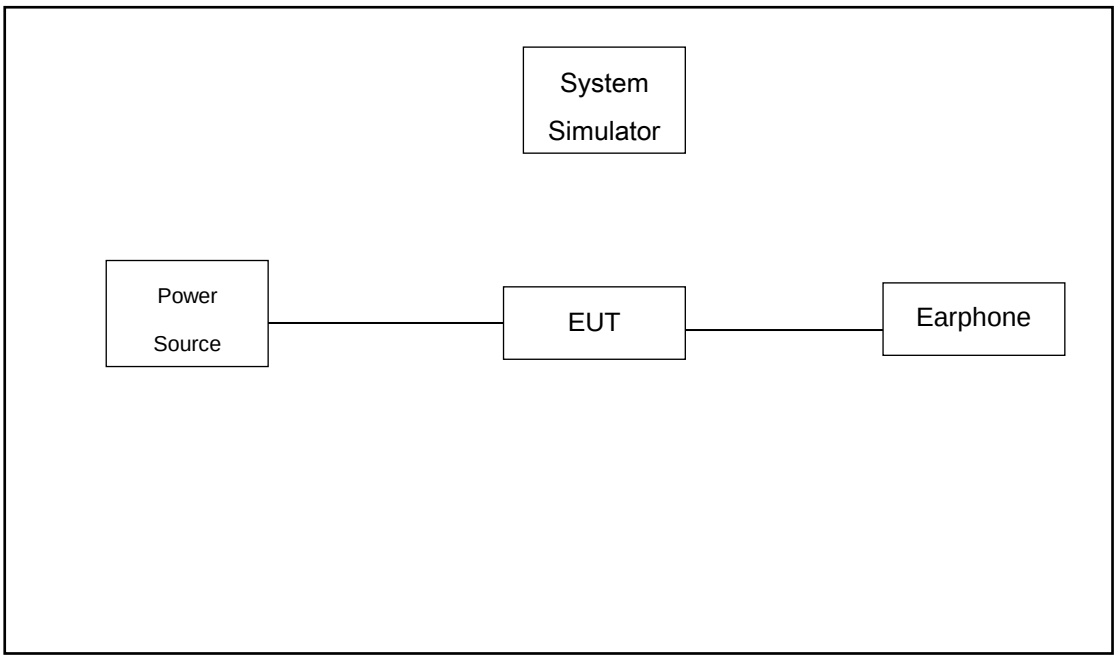

2.3 Support Unit used in test configuration and system

Item	Equipment	Trade Name	Model No.	FCC ID	Data Cable	Power Cord
1.	LTE Base Station	Anritsu	MT8820C	N/A	N/A	Unshielded, 1.8 m
2.	Earphone	Lenovo	SH100	N/A	Unshielded,1.2m	N/A

2.4 Frequency List of Low/Middle/High Channels

LTE Band 2 Channel and Frequency List				
BW [MHz]	Channel/Frequency(MHz)	Lowest	Middle	Highest
20	Channel	18700	18900	19100
	Frequency	1860	1880	1900
15	Channel	18675	18900	19125
	Frequency	1857.5	1880	1902.5
10	Channel	18650	18900	19150
	Frequency	1855	1880	1905
5	Channel	18625	18900	19175
	Frequency	1852.5	1880	1907.5
3	Channel	18615	18900	19185
	Frequency	1851.5	1880	1908.5
1.4	Channel	18607	18900	19193
	Frequency	1850.7	1880	1909.3

LTE Band 4 Channel and Frequency List				
BW [MHz]	Channel/Frequency(MHz)	Lowest	Middle	Highest
20	Channel	20050	20175	20300
	Frequency	1720	1732.5	1745
15	Channel	20025	20175	20325
	Frequency	1717.5	1732.5	1747.5
10	Channel	20000	20175	20350
	Frequency	1715	1732.5	1750
5	Channel	19975	20175	20375
	Frequency	1712.5	1732.5	1752.5
3	Channel	19965	20175	20385
	Frequency	1711.5	1732.5	1753.5
1.4	Channel	19957	20175	20393
	Frequency	1710.7	1732.5	1754.3

LTE Band 5 Channel and Frequency List				
BW [MHz]	Channel/Frequency(MHz)	Lowest	Middle	Highest
10	Channel	20450	20525	20600
	Frequency	829	836.5	844
5	Channel	20425	20525	20625
	Frequency	826.5	836.5	846.5
3	Channel	20415	20525	20635
	Frequency	825.5	836.5	847.5
1.4	Channel	20407	20525	20643
	Frequency	824.7	836.5	848.3

LTE Band 12 Channel and Frequency List				
BW [MHz]	Channel/Frequency(MHz)	Lowest	Middle	Highest
10	Channel	23060	23095	23130
	Frequency	704	707.5	711
5	Channel	23035	23095	23155
	Frequency	701.5	707.5	713.5
3	Channel	23025	23095	23165
	Frequency	700.5	707.5	714.5
1.4	Channel	23017	23095	23173
	Frequency	699.7	707.5	715.3

LTE Band 17 Channel and Frequency List				
BW [MHz]	Channel/Frequency(MHz)	Lowest	Middle	Highest
10	Channel	23780	23790	23800
	Frequency	709	710	711
5	Channel	23755	23790	23825
	Frequency	706.5	710	713.5

3 Conducted Test Items

3.1 Measuring Instruments

See list of measuring instruments of this test report.

3.2 Test Setup

3.2.1 Conducted Output Power

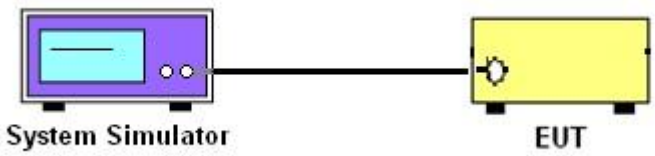

3.3 Test Result of Conducted Test

Please refer to Appendix A.

3.4 Conducted Output Power and ERP/EIRP

3.4.1 Description of the Conducted Output Power Measurement and ERP/EIRP Measurement

A system simulator was used to establish communication with the EUT. Its parameters were set to force the EUT transmitting at maximum output power. The measured power in the radio frequency on the transmitter output terminals shall be reported.

The ERP of mobile transmitters must not exceed 7 Watts for LTE Band 5.

The ERP of mobile transmitters must not exceed 3 Watts for LTE Band 12 and Band 17.

The EIRP of mobile transmitters must not exceed 2 Watts for LTE Band 2.

The EIRP of mobile transmitters must not exceed 1 Watts for LTE Band 4.

According to KDB 412172 D01 Power Approach,

EIRP = $P_T + G_T – L_C$, ERP = EIRP -2.15, where

P_T = transmitter output power in dBm

G_T = gain of the transmitting antenna in dBi

L_C = signal attenuation in the connecting cable between the transmitter and antenna in dB

3.4.2 Test Procedures

1. The testing follows ANSI C63.26 Section 5.2
2. The transmitter output port was connected to the system simulator.
3. Set EUT at maximum power through the system simulator.
4. Select lowest, middle, and highest channels for each band and different modulation.
5. Measure and record the power level from the system simulator.

4 Radiated Test Items

4.1 Measuring Instruments

See list of measuring instruments of this test report.

4.2 Test Setup

4.2.1 For radiated test from 30MHz to 1GHz

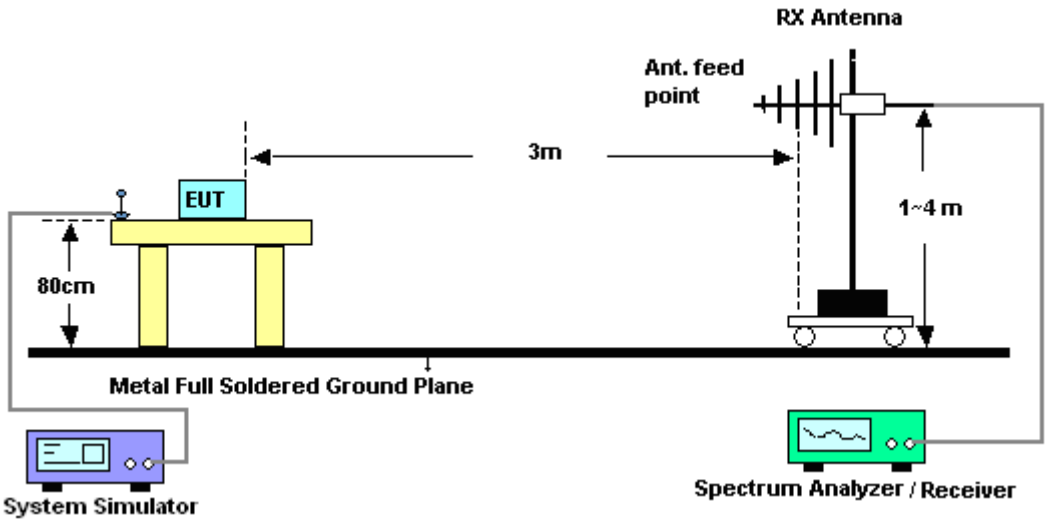

4.2.2 For radiated test above 1GHz

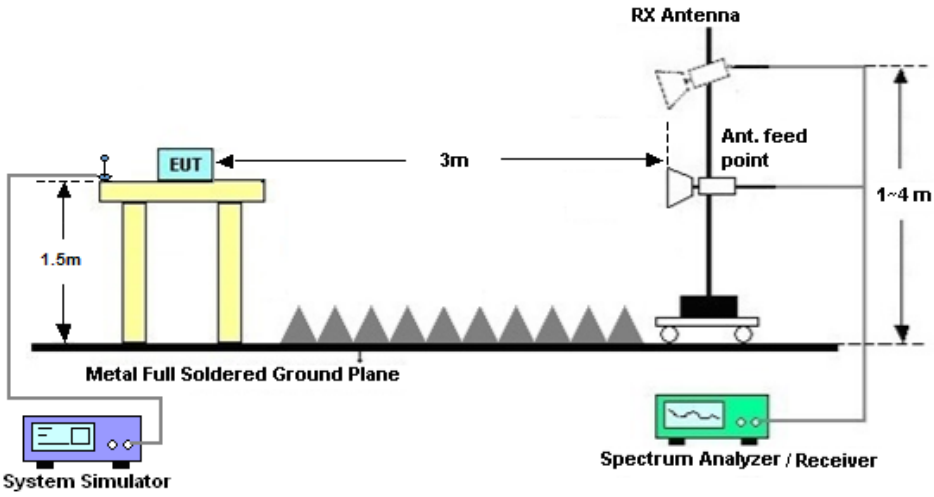

4.3 Test Result of Radiated Test

Please refer to Appendix B.

4.4 Radiated Spurious Emission

4.4.1 Description of Radiated Spurious Emission

The radiated spurious emission was measured by substitution method according to ANSI C63.26. The power of any emission outside of the authorized operating frequency ranges must be attenuated below the transmitter power (P) by a factor of at least 43 + 10 log (P) dB.

The spectrum is scanned from 30 MHz up to a frequency including its 10th harmonic.

4.4.2 Test Procedures

1. The testing follows ANSI C63.26 Section 5.5
2. The EUT was placed on a turntable with 0.8 meter height for frequency below 1GHz and 1.5 meter height for frequency above 1GHz respectively above ground.
3. The EUT was set 3 meters from the receiving antenna mounted on the antenna tower.
4. The table was rotated 360 degrees to determine the position of the highest spurious emission.
5. The height of the receiving antenna is varied between 1m to 4m to search the maximum spurious emission for both horizontal and vertical polarizations.
6. During the measurement, the system simulator parameters were set to force the EUT transmitting at maximum output power.
7. Make the measurement with the spectrum analyzer's RBW = 1MHz, VBW = 3MHz, taking the record of maximum spurious emission.
8. A horn antenna was substituted in place of the EUT and was driven by a signal generator.
9. Tune the output power of signal generator to the same emission level with EUT maximum spurious emission.
10. EIRP (dBm) = S.G. Power – Tx Cable Loss + Tx Antenna Gain
11. ERP (dBm) = EIRP - 2.15
12. The RF fundamental frequency should be excluded against the limit line in the operating frequency band.
    The limit line is derived from 43 + 10log(P)dB below the transmitter power P(Watts)
    = P(W)- [43 + 10log(P)] (dB)
    = [30 + 10log(P)] (dBm) - [43 + 10log(P)] (dB)
    = -13dBm.

5 List of Measuring Equipment

Instrument	Manufacturer	Model No.	Serial No.	Characteristics	Calibration Date	Test Date	Due Date	Remark
EXA Spectrum Analyzer	Keysight	N9010B	MY57471084	10Hz-44GHz	Jun. 25, 2018	May 26, 2019	Jun. 24, 2019	Radiation (03CH06-KS)
Bilog Antenna	TeseQ	CBL6111D	44483	30MHz-1GHz	Dec. 28, 2018	May 26, 2019	Dec. 27, 2019	Radiation (03CH06-KS)
Double Ridge Horn Antenna	ETS-Lindgren	3117	75957	1GHz~18GHz	Oct. 20, 2018	May 26, 2019	Oct. 19, 2019	Radiation (03CH06-KS)
SHF-EHF Horn	Com-power	AH-840	101070	18GHz~40GHz	Jan. 05, 2019	May 26, 2019	Jan. 04, 2020	Radiation (03CH06-KS)
Amplifier	SONOMA	310N	187289	9KHz ~1GHZ	Aug. 06, 2018	May 26, 2019	Aug. 05, 2019	Radiation (03CH06-KS)
Amplifier	MITEQ	TTA1840-35-HG	2014749	18~40GHz	Jan. 14, 2019	May 26, 2019	Jan.13, 2020	Radiation (03CH06-KS)
high gain Amplifier	MITEQ	AMF-7D-00101800-30-10P	2025788	1Ghz-18Ghz	Apr. 17, 2019	May 26, 2019	Apr. 16, 2020	Radiation (03CH06-KS)
Amplifier	Keysight	83017A	MY53270203	500MHz~26.5GHz	Apr. 15, 2019	May 26, 2019	Apr. 14. 2020	Radiation (03CH06-KS)
AC Power Source	Chroma	61601	F104090004	N/A	NCR	May 26, 2019	NCR	Radiation (03CH06-KS)
Turn Table	ChamPro	EM 1000-T	060762-T	0~360 degree	NCR	May 26, 2019	NCR	Radiation (03CH06-KS)
Antenna Mast	ChamPro	EM 1000-A	060762-A	1 m~4 m	NCR	May 26, 2019	NCR	Radiation (03CH06-KS)

NCR: No Calibration Required

6 Uncertainty of Evaluation

The measurement uncertainties shown below were calculated in accordance with the requirements of ANSI 63.26-2015. All the measurement uncertainty value were shown with a coverage K=2 to indicate 95% level of confidence. The measurement data show herein meets or exceeds the CISPR measurement uncertainty values specified in CISPR 16-4-2 and can be compared directly to specified limit to determine compliance.

Uncertainty of Radiated Emission Measurement (30 MHz ~ 1000 MHz)

Measuring Uncertainty for a Level of Confidence of 95% (U = 2Uc(y))	**2.5dB**

Uncertainty of Radiated Emission Measurement (1 GHz ~ 40 GHz)

Measuring Uncertainty for a Level of Confidence of 95% (U = 2Uc(y))	**2.1dB**

Appendix A. Test Results of Conducted Test

Conducted Output Power(Average power)

LTE Band 2 Maximum Average Power [dBm]						
BW [MHz]	RB Size	RB Offset	Mod	Lowest	Middle	Highest
20	1	0	QPSK	22.02	21.84	21.98
20	1	49		22.07	21.93	22.03
20	1	99		21.73	21.92	21.96
20	50	0		21.24	21.09	21.19
20	50	24		21.27	21.15	21.23
20	50	50		21.03	21.18	21.17
20	100	0		21.23	21.11	21.21
20	1	0	16-QAM	21.18	20.94	21.06
20	1	49		20.87	20.96	21.11
20	1	99		20.83	20.99	21.18
20	50	0		20.11	20.21	20.29
20	50	24		19.88	20.29	20.35
20	50	50		19.94	20.11	20.13
20	100	0		20.02	20.21	20.17
15	1	0	QPSK	22.01	22.04	22.03
15	1	37		22.01	21.95	21.97
15	1	74		21.93	21.93	21.91
15	36	0		21.32	21.15	21.40
15	36	20		21.01	21.16	21.30
15	36	39		21.07	21.17	21.27
15	75	0		21.13	21.13	21.33
15	1	0	16-QAM	21.38	21.37	21.17
15	1	37		21.28	21.37	21.27
15	1	74		21.39	20.97	21.33
15	36	0		20.42	20.05	20.37
15	36	20		19.95	20.29	20.42
15	36	39		19.99	20.10	20.41
15	75	0		20.15	20.26	20.37

LTE Band 2 Maximum Average Power [dBm]						
BW [MHz]	RB Size	RB Offset	Mod	Lowest	Middle	Highest
10	1	0	QPSK	22.05	21.97	22.04
10	1	25		22.01	21.95	22.02
10	1	49		21.81	21.93	21.91
10	25	0		21.28	21.12	21.31
10	25	12		21.05	21.17	21.30
10	25	25		20.94	21.14	21.25
10	50	0		21.21	21.16	21.32
10	1	0	16-QAM	21.05	21.04	21.17
10	1	25		20.89	20.93	21.17
10	1	49		20.85	20.91	21.18
10	25	0		20.51	20.14	20.44
10	25	12		20.26	20.19	20.44
10	25	25		20.13	20.26	20.38
10	50	0		20.14	20.19	20.28
5	1	0	QPSK	21.91	21.99	22.07
5	1	12		22.05	22.01	21.98
5	1	24		21.89	22.02	21.92
5	12	0		21.49	21.05	21.30
5	12	7		21.39	21.12	21.15
5	12	13		21.43	21.11	21.24
5	25	0		21.47	21.06	21.25
5	1	0	16-QAM	21.08	20.87	21.05
5	1	12		21.02	20.89	20.92
5	1	24		20.73	20.70	21.11
5	12	0		20.31	19.96	20.10
5	12	7		20.33	20.02	20.22
5	12	13		20.37	20.07	20.07
5	25	0		20.50	20.08	20.25

LTE Band 2 Maximum Average Power [dBm]						
BW [MHz]	RB Size	RB Offset	Mod	Lowest	Middle	Highest
3	1	0	QPSK	21.93	22.07	21.93
3	1	8		22.04	21.87	22.03
3	1	14		22.01	21.94	21.99
3	8	0		21.56	21.19	21.39
3	8	4		21.53	21.14	21.22
3	8	7		21.55	21.19	21.21
3	15	0		21.47	21.10	21.32
3	1	0	16-QAM	21.18	20.91	21.13
3	1	8		21.24	20.86	20.87
3	1	14		21.09	20.93	20.96
3	8	0		20.60	20.37	20.37
3	8	4		20.58	20.28	20.35
3	8	7		20.66	20.18	20.27
3	15	0		20.50	20.00	20.46
1.4	1	0	QPSK	22.01	21.87	21.89
1.4	1	3		22.03	21.92	21.97
1.4	1	5		21.99	22.03	21.94
1.4	3	0		22.06	21.96	21.97
1.4	3	1		21.94	21.98	22.03
1.4	3	3		22.05	21.93	21.92
1.4	6	0		21.50	21.10	21.32
1.4	1	0	16-QAM	20.96	21.02	21.26
1.4	1	3		21.24	21.01	21.22
1.4	1	5		21.35	20.95	21.05
1.4	3	0		21.47	21.19	21.44
1.4	3	1		21.60	21.25	21.25
1.4	3	3		21.58	21.35	21.37
1.4	6	0		20.59	20.19	20.41

LTE Band 4 Maximum Average Power [dBm]						
BW [MHz]	RB Size	RB Offset	Mod	Lowest	Middle	Highest
20	1	0	QPSK	21.66	21.83	21.78
20	1	49		21.76	21.89	21.50
20	1	99		21.49	21.67	21.65
20	50	0		20.69	20.87	20.78
20	50	24		20.63	20.72	20.69
20	50	50		20.54	20.73	20.56
20	100	0		20.63	20.77	20.59
20	1	0	16-QAM	20.43	20.30	20.74
20	1	49		20.29	20.51	20.49
20	1	99		20.42	20.34	20.43
20	50	0		19.64	19.60	19.90
20	50	24		19.61	19.64	19.69
20	50	50		19.59	19.56	19.58
20	100	0		19.38	19.52	19.83
15	1	0	QPSK	21.78	21.50	21.78
15	1	37		21.71	21.62	21.63
15	1	74		21.51	21.57	21.50
15	36	0		20.60	20.60	20.72
15	36	20		20.58	20.66	20.72
15	36	39		20.58	20.56	20.58
15	75	0		20.56	20.71	20.62
15	1	0	16-QAM	20.44	20.47	20.69
15	1	37		20.36	20.54	20.28
15	1	74		20.48	20.46	20.35
15	36	0		19.57	19.69	19.53
15	36	20		19.51	19.67	19.49
15	36	39		19.41	19.58	19.50
15	75	0		19.66	19.61	19.54

LTE Band 4 Maximum Average Power [dBm]						
BW [MHz]	RB Size	RB Offset	Mod	Lowest	Middle	Highest
10	1	0	QPSK	21.61	21.66	21.49
10	1	25		21.35	21.64	21.54
10	1	49		21.43	21.44	21.61
10	25	0		20.50	20.74	20.73
10	25	12		20.59	20.67	20.67
10	25	25		20.54	20.63	20.65
10	50	0		20.58	20.57	20.62
10	1	0	16-QAM	20.41	20.44	20.53
10	1	25		20.31	20.52	20.44
10	1	49		20.33	20.32	20.50
10	25	0		19.49	19.66	19.67
10	25	12		19.52	19.69	19.70
10	25	25		19.44	19.55	19.56
10	50	0		19.44	19.49	19.65
5	1	0	QPSK	21.48	21.58	21.53
5	1	12		21.53	21.74	21.52
5	1	24		21.35	21.47	21.88
5	12	0		20.50	20.70	20.60
5	12	7		20.50	20.66	20.67
5	12	13		20.45	20.70	20.73
5	25	0		20.48	20.67	20.62
5	1	0	16-QAM	20.33	20.51	20.55
5	1	12		20.10	20.37	20.34
5	1	24		20.22	20.40	20.55
5	12	0		19.33	19.82	19.44
5	12	7		19.32	19.63	19.38
5	12	13		19.28	19.63	19.48
5	25	0		19.46	19.69	19.42

LTE Band 4 Maximum Average Power [dBm]						
BW [MHz]	RB Size	RB Offset	Mod	Lowest	Middle	Highest
3	1	0	QPSK	21.54	21.49	21.34
3	1	8		21.51	21.75	21.54
3	1	14		21.45	21.84	21.66
3	8	0		20.47	20.69	20.55
3	8	4		20.56	20.68	20.59
3	8	7		20.51	20.69	20.58
3	15	0		20.52	20.64	20.56
3	1	0	16-QAM	20.46	20.57	20.39
3	1	8		20.09	20.44	20.33
3	1	14		20.37	20.51	20.44
3	8	0		19.49	19.86	19.51
3	8	4		19.54	19.65	19.51
3	8	7		19.60	19.75	19.64
3	15	0		19.54	19.51	19.59
1.4	1	0	QPSK	21.52	21.66	21.36
1.4	1	3		21.63	21.70	21.67
1.4	1	5		21.68	21.66	21.53
1.4	3	0		21.56	21.82	21.52
1.4	3	1		21.82	21.69	21.74
1.4	3	3		21.46	21.70	21.75
1.4	6	0		20.55	20.61	20.57
1.4	1	0	16-QAM	20.33	20.60	20.35
1.4	1	3		20.31	20.51	20.54
1.4	1	5		20.31	20.48	20.49
1.4	3	0		20.47	20.67	20.44
1.4	3	1		20.62	20.72	20.58
1.4	3	3		20.61	20.65	20.59
1.4	6	0		19.13	19.61	19.54

LTE Band 5 Maximum Average Power [dBm]						
BW [MHz]	RB Size	RB Offset	Mod	Lowest	Middle	Highest
10	1	0	QPSK	22.93	23.14	22.80
10	1	25		23.11	23.17	22.83
10	1	49		23.13	22.85	22.87
10	25	0		22.23	22.54	22.19
10	25	12		22.31	22.59	22.15
10	25	25		22.39	22.41	22.09
10	50	0		22.29	22.50	22.08
10	1	0	16-QAM	21.96	22.19	21.85
10	1	25		22.11	22.22	21.79
10	1	49		22.25	21.75	21.96
10	25	0		21.33	21.41	20.95
10	25	12		21.35	21.31	20.96
10	25	25		21.44	21.27	20.96
10	50	0		21.22	21.39	20.98
5	1	0	QPSK	22.97	23.04	22.89
5	1	12		23.15	23.11	22.91
5	1	24		22.76	23.11	22.95
5	12	0		22.19	22.59	22.11
5	12	7		22.25	22.61	22.11
5	12	13		22.28	22.53	22.19
5	25	0		22.16	22.51	22.06
5	1	0	16-QAM	22.01	22.13	21.88
5	1	12		22.23	22.21	21.83
5	1	24		21.85	21.87	21.81
5	12	0		21.20	21.41	21.00
5	12	7		21.35	21.55	21.03
5	12	13		21.30	21.43	21.13
5	25	0		21.26	21.44	21.08

LTE Band 5 Maximum Average Power [dBm]						
BW [MHz]	RB Size	RB Offset	Mod	Lowest	Middle	Highest
3	1	0	QPSK	22.88	22.87	22.82
3	1	8		23.15	23.01	22.97
3	1	14		22.80	23.13	22.83
3	8	0		22.36	22.71	22.28
3	8	4		22.21	22.60	22.17
3	8	7		22.21	22.53	22.42
3	15	0		22.22	22.55	22.25
3	1	0	16-QAM	22.12	22.14	21.77
3	1	8		22.22	22.01	21.76
3	1	14		22.02	22.05	21.98
3	8	0		21.22	21.51	21.15
3	8	4		21.17	21.54	21.34
3	8	7		21.26	21.57	21.48
3	15	0		21.34	21.45	21.28
1.4	1	0	QPSK	23.04	23.12	23.14
1.4	1	3		23.15	23.09	23.09
1.4	1	5		22.91	23.11	23.03
1.4	3	0		23.08	23.11	22.94
1.4	3	1		23.13	23.11	23.09
1.4	3	3		23.13	23.09	23.08
1.4	6	0		22.14	22.52	22.38
1.4	1	0	16-QAM	22.06	22.11	22.08
1.4	1	3		22.22	22.21	22.08
1.4	1	5		21.89	22.25	21.97
1.4	3	0		22.15	22.48	22.24
1.4	3	1		22.24	22.54	22.35
1.4	3	3		22.19	22.49	22.31
1.4	6	0		21.29	21.47	21.30

LTE Band 12 Maximum Average Power [dBm]						
BW [MHz]	RB Size	RB Offset	Mod	Lowest	Middle	Highest
10	1	0	QPSK	22.51	22.47	22.50
10	1	25		22.65	22.96	22.91
10	1	49		22.68	22.89	22.62
10	25	0		21.66	21.83	21.89
10	25	12		21.72	21.97	21.96
10	25	25		21.88	21.99	21.83
10	50	0		21.80	21.86	21.82
10	1	0	16-QAM	21.67	21.64	21.60
10	1	25		21.51	21.54	21.91
10	1	49		21.67	21.82	21.51
10	25	0		20.65	20.63	20.91
10	25	12		20.75	20.75	20.98
10	25	25		20.98	20.88	20.89
10	50	0		20.83	20.75	20.78
5	1	0	QPSK	22.50	22.86	22.78
5	1	12		22.82	22.92	22.84
5	1	24		22.51	22.85	22.51
5	12	0		21.90	21.87	21.95
5	12	7		21.73	21.95	21.79
5	12	13		21.64	21.98	21.68
5	25	0		21.68	21.93	21.82
5	1	0	16-QAM	21.55	21.80	21.76
5	1	12		21.61	21.75	21.53
5	1	24		21.49	21.55	21.73
5	12	0		20.71	20.81	20.82
5	12	7		20.65	20.78	20.66
5	12	13		20.48	20.72	20.48
5	25	0		20.58	20.85	20.73

LTE Band 12 Maximum Average Power [dBm]						
BW [MHz]	RB Size	RB Offset	Mod	Lowest	Middle	Highest
3	1	0	QPSK	22.88	22.71	22.83
3	1	8		22.89	22.72	22.67
3	1	14		22.54	22.89	22.85
3	8	0		21.79	21.84	21.90
3	8	4		21.83	21.96	21.77
3	8	7		21.77	21.94	21.88
3	15	0		21.80	21.98	21.82
3	1	0	16-QAM	21.75	21.99	21.95
3	1	8		21.64	21.97	21.93
3	1	14		21.53	21.70	21.89
3	8	0		20.98	20.91	20.92
3	8	4		20.86	21.05	20.77
3	8	7		20.82	21.01	20.73
3	15	0		20.89	20.76	20.73
1.4	1	0	QPSK	22.59	22.66	22.59
1.4	1	3		22.67	22.86	22.80
1.4	1	5		22.63	22.87	22.88
1.4	3	0		22.58	22.82	22.64
1.4	3	1		22.73	22.83	22.88
1.4	3	3		22.74	22.84	22.87
1.4	6	0		21.68	21.87	21.90
1.4	1	0	16-QAM	21.58	21.74	21.74
1.4	1	3		21.75	21.95	21.81
1.4	1	5		21.78	21.94	21.78
1.4	3	0		21.74	21.95	21.74
1.4	3	1		21.69	21.94	21.93
1.4	3	3		21.71	22.00	21.94
1.4	6	0		20.59	20.76	20.61

LTE Band 17 Maximum Average Power [dBm]						
BW [MHz]	RB Size	RB Offset	Mod	Lowest	Middle	Highest
10	1	0	QPSK	22.23	22.35	22.34
10	1	25		22.36	22.46	22.32
10	1	49		22.31	22.44	22.25
10	25	0		21.73	21.60	21.64
10	25	12		21.73	21.57	21.55
10	25	25		21.70	21.75	21.66
10	50	0		21.66	21.73	21.65
10	1	0	16-QAM	21.37	21.38	21.71
10	1	25		21.30	21.39	21.44
10	1	49		21.54	21.55	21.31
10	25	0		20.78	20.69	20.76
10	25	12		20.85	20.72	20.71
10	25	25		20.62	20.66	20.63
10	50	0		20.59	20.58	20.69
5	1	0	QPSK	22.42	22.32	22.27
5	1	12		22.41	22.31	22.29
5	1	24		22.38	22.45	22.39
5	12	0		21.68	21.41	21.65
5	12	7		21.75	21.60	21.59
5	12	13		21.77	21.54	21.56
5	25	0		21.73	21.54	21.55
5	1	0	16-QAM	21.67	21.28	21.45
5	1	12		21.65	21.40	21.38
5	1	24		21.37	21.26	21.21
5	12	0		20.52	20.23	20.66
5	12	7		20.57	20.63	20.47
5	12	13		20.63	20.58	20.45
5	25	0		20.79	20.58	20.54

ERP/EIRP

LTE Band 2 (GT - LC = 2.00 dB) QPSK									
Bandwidth	1.4M			3M			5M		
Channel	18607	18900	19193	18615	18900	19185	18625	18900	19175
	(Low)	(Mid)	(High)	(Low)	(Mid)	(High)	(Low)	(Mid)	(High)
Frequency (MHz)	1850.7	1880	1909.3	1851.5	1880	1908.5	1852.5	1880	1907.5
Conducted Power (dBm)	22.06	21.96	21.97	21.93	22.07	21.93	21.91	21.99	22.07
Conducted Power (Watts)	0.1607	0.1570	0.1574	0.1560	0.1611	0.1560	0.1552	0.1581	0.1611
EIRP(dBm)	24.06	23.96	23.97	23.93	24.07	23.93	23.91	23.99	24.07
EIRP(Watts)	0.2547	0.2489	0.2495	0.2472	0.2553	0.2472	0.2460	0.2506	0.2553

LTE Band 2 (GT - LC = 2.00 dB) QPSK									
Bandwidth	10M			15M			20M		
Channel	18650	18900	19150	18675	18900	19125	18650	18900	19100
	(Low)	(Mid)	(High)	(Low)	(Mid)	(High)	(Low)	(Mid)	(High)
Frequency (MHz)	1855	1880	1905	1857.5	1880	1902.5	1860	1880	1900
Conducted Power (dBm)	22.05	21.97	22.04	22.01	22.04	22.03	22.07	21.93	22.03
Conducted Power (Watts)	0.1603	0.1574	0.1600	0.1589	0.1600	0.1596	0.1611	0.1560	0.1596
EIRP(dBm)	24.05	23.97	24.04	24.01	24.04	24.03	24.07	23.93	24.03
EIRP(Watts)	0.2541	0.2495	0.2535	0.2518	0.2535	0.2529	0.2553	0.2472	0.2529

LTE Band 2 (GT - LC = 2.00 dB) 16QAM									
Bandwidth	1.4M			3M			5M		
Channel	18607	18900	19193	18615	18900	19185	18625	18900	19175
	(Low)	(Mid)	(High)	(Low)	(Mid)	(High)	(Low)	(Mid)	(High)
Frequency (MHz)	1850.7	1880	1909.3	1851.5	1880	1908.5	1852.5	1880	1907.5
Conducted Power (dBm)	21.60	21.25	21.25	21.24	20.86	20.87	20.73	20.70	21.11
Conducted Power (Watts)	0.1445	0.1334	0.1334	0.1330	0.1219	0.1222	0.1183	0.1175	0.1291
EIRP(dBm)	23.60	23.25	23.25	23.24	22.86	22.87	22.73	22.70	23.11
EIRP(Watts)	0.2291	0.2113	0.2113	0.2109	0.1932	0.1936	0.1875	0.1862	0.2046

LTE Band 2 (GT - LC = 2.00 dB) 16QAM									
Bandwidth	10M			15M			20M		
Channel	18650	18900	19150	18675	18900	19125	18650	18900	19100
	(Low)	(Mid)	(High)	(Low)	(Mid)	(High)	(Low)	(Mid)	(High)
Frequency (MHz)	1855	1880	1905	1857.5	1880	1902.5	1860	1880	1900
Conducted Power (dBm)	20.85	20.91	21.18	21.39	20.97	21.33	21.18	20.94	21.06
Conducted Power (Watts)	0.1216	0.1233	0.1312	0.1377	0.1250	0.1358	0.1312	0.1242	0.1276
EIRP(dBm)	22.85	22.91	23.18	23.39	22.97	23.33	23.18	22.94	23.06
EIRP(Watts)	0.1928	0.1954	0.2080	0.2183	0.1982	0.2153	0.2080	0.1968	0.2023

LTE Band 4 (GT - LC = 1.50 dB) QPSK									
Bandwidth	1.4M			3M			5M		
Channel	19957	20175	20393	19965	20175	20385	19975	20175	20375
	(Low)	(Mid)	(High)	(Low)	(Mid)	(High)	(Low)	(Mid)	(High)
Frequency (MHz)	1710.7	1732.5	1754.3	1711.5	1732.5	1753.5	1712.5	1732.5	1752.5
Conducted Power (dBm)	21.82	21.69	21.74	21.45	21.84	21.66	21.35	21.47	21.88
Conducted Power (Watts)	0.1521	0.1476	0.1493	0.1396	0.1528	0.1466	0.1365	0.1403	0.1542
EIRP(dBm)	23.32	23.19	23.24	22.95	23.34	23.16	22.85	22.97	23.38
EIRP(Watts)	0.2148	0.2084	0.2109	0.1972	0.2158	0.2070	0.1928	0.1982	0.2178

LTE Band 4 (GT - LC = 1.50 dB) QPSK									
Bandwidth	10M			15M			20M		
Channel	20000	20175	20350	20025	20175	20325	20050	20175	20300
	(Low)	(Mid)	(High)	(Low)	(Mid)	(High)	(Low)	(Mid)	(High)
Frequency (MHz)	1715	1732.5	1750	1717.5	1732.5	1747.5	1720	1732.5	1745
Conducted Power (dBm)	21.61	21.66	21.49	21.78	21.50	21.78	21.76	21.89	21.50
Conducted Power (Watts)	0.1449	0.1466	0.1409	0.1507	0.1413	0.1507	0.1500	0.1545	0.1413
EIRP(dBm)	23.11	23.16	22.99	23.28	23.00	23.28	23.26	23.39	23.00
EIRP(Watts)	0.2046	0.2070	0.1991	0.2128	0.1995	0.2128	0.2118	0.2183	0.1995

LTE Band 4 (GT - LC = 1.50 dB) 16QAM									
Bandwidth	1.4M			3M			5M		
Channel	19957	20175	20393	19965	20175	20385	19975	20175	20375
	(Low)	(Mid)	(High)	(Low)	(Mid)	(High)	(Low)	(Mid)	(High)
Frequency (MHz)	1710.7	1732.5	1754.3	1711.5	1732.5	1753.5	1712.5	1732.5	1752.5
Conducted Power (dBm)	20.62	20.72	20.58	20.46	20.57	20.39	20.33	20.51	20.55
Conducted Power (Watts)	0.1153	0.1180	0.1143	0.1112	0.1140	0.1094	0.1079	0.1125	0.1135
EIRP(dBm)	22.12	22.22	22.08	21.96	22.07	21.89	21.83	22.01	22.05
EIRP(Watts)	0.1629	0.1667	0.1614	0.1570	0.1611	0.1545	0.1524	0.1589	0.1603

LTE Band 4 (GT - LC = 1.50 dB) 16QAM									
Bandwidth	10M			15M			20M		
Channel	20000	20175	20350	20025	20175	20325	20050	20175	20300
	(Low)	(Mid)	(High)	(Low)	(Mid)	(High)	(Low)	(Mid)	(High)
Frequency (MHz)	1715	1732.5	1750	1717.5	1732.5	1747.5	1720	1732.5	1745
Conducted Power (dBm)	20.41	20.44	20.53	20.44	20.47	20.69	20.43	20.30	20.74
Conducted Power (Watts)	0.1099	0.1107	0.1130	0.1107	0.1114	0.1172	0.1104	0.1072	0.1186
EIRP(dBm)	21.91	21.94	22.03	21.94	21.97	22.19	21.93	21.80	22.24
EIRP(Watts)	0.1552	0.1563	0.1596	0.1563	0.1574	0.1656	0.1560	0.1514	0.1675

LTE Band 5 (GT - LC = 1.50 dB) QPSK									
Bandwidth	1.4M			3M			5M		
Channel	20407	20525	20643	20415	20525	20635	20425	20525	20625
	(Low)	(Mid)	(High)	(Low)	(Mid)	(High)	(Low)	(Mid)	(High)
Frequency (MHz)	824.7	836.5	848.3	825.5	836.5	847.5	826.5	836.5	846.5
Conducted Power (dBm)	23.15	23.09	23.09	23.15	23.01	22.97	23.15	23.11	22.91
Conducted Power (Watts)	0.2065	0.2037	0.2037	0.2065	0.2000	0.1982	0.2065	0.2046	0.1954
ERP(dBm)	22.50	22.44	22.44	22.50	22.36	22.32	22.50	22.46	22.26
ERP(Watts)	0.1778	0.1754	0.1754	0.1778	0.1722	0.1706	0.1778	0.1762	0.1683

LTE Band 5 (GT - LC = 1.50 dB) QPSK			
Bandwidth	10M		
Channel	20450	20525	20600
	(Low)	(Mid)	(High)
Frequency (MHz)	829	836.5	844
Conducted Power (dBm)	23.11	23.17	22.83
Conducted Power (Watts)	0.2046	0.2075	0.1919
ERP(dBm)	22.46	22.52	22.18
ERP(Watts)	0.1762	0.1786	0.1652

LTE Band 5 (GT - LC = 1.50 dB) 16QAM									
Bandwidth	1.4M			3M			5M		
Channel	20407	20525	20643	20415	20525	20635	20425	20525	20625
	(Low)	(Mid)	(High)	(Low)	(Mid)	(High)	(Low)	(Mid)	(High)
Frequency (MHz)	824.7	836.5	848.3	825.5	836.5	847.5	826.5	836.5	846.5
Conducted Power (dBm)	22.24	22.54	22.35	22.22	22.01	21.76	22.23	22.21	21.83
Conducted Power (Watts)	0.1675	0.1795	0.1718	0.1667	0.1589	0.1500	0.1671	0.1663	0.1524
ERP(dBm)	21.59	21.89	21.70	21.57	21.36	21.11	21.58	21.56	21.18
ERP(Watts)	0.1442	0.1545	0.1479	0.1435	0.1368	0.1291	0.1439	0.1432	0.1312

LTE Band 5 (GT - LC = 1.50 dB) 16QAM			
Bandwidth	10M		
Channel	20450	20525	20600
	(Low)	(Mid)	(High)
Frequency (MHz)	829	836.5	844
Conducted Power (dBm)	22.25	21.75	21.96
Conducted Power (Watts)	0.1679	0.1496	0.1570
ERP(dBm)	21.60	21.10	21.31
ERP(Watts)	0.1445	0.1288	0.1352

LTE Band 12 (GT - LC = 1.50 dB) QPSK									
Bandwidth	1.4M			3M			5M		
Channel	23017	23095	23173	23025	23095	23165	23035	23095	23155
	(Low)	(Mid)	(High)	(Low)	(Mid)	(High)	(Low)	(Mid)	(High)
Frequency (MHz)	699.7	707.5	715.3	700.5	707.5	714.5	701.5	707.5	713.5
Conducted Power (dBm)	22.63	22.87	22.88	22.54	22.89	22.85	22.82	22.92	22.84
Conducted Power (Watts)	0.1832	0.1936	0.1941	0.1795	0.1945	0.1928	0.1914	0.1959	0.1923
ERP(dBm)	21.98	22.22	22.23	21.89	22.24	22.20	22.17	22.27	22.19
ERP(Watts)	0.1578	0.1667	0.1671	0.1545	0.1675	0.1660	0.1648	0.1687	0.1656

LTE Band 12 (GT - LC = 1.50 dB) QPSK			
Bandwidth	10M		
Channel	23060	23095	23130
	(Low)	(Mid)	(High)
Frequency (MHz)	704	707.5	711
Conducted Power (dBm)	22.65	22.96	22.91
Conducted Power (Watts)	0.1841	0.1977	0.1954
ERP(dBm)	22.00	22.31	22.26
ERP(Watts)	0.1585	0.1702	0.1683

LTE Band 12 (GT - LC = 1.50 dB) 16QAM									
Bandwidth	1.4M			3M			5M		
Channel	23017	23095	23173	23025	23095	23165	23035	23095	23155
	(Low)	(Mid)	(High)	(Low)	(Mid)	(High)	(Low)	(Mid)	(High)
Frequency (MHz)	699.7	707.5	715.3	700.5	707.5	714.5	701.5	707.5	713.5
Conducted Power (dBm)	21.71	22.00	21.94	21.75	21.99	21.95	21.55	21.80	21.76
Conducted Power (Watts)	0.1483	0.1585	0.1563	0.1496	0.1581	0.1567	0.1429	0.1514	0.1500
ERP(dBm)	21.06	21.35	21.29	21.10	21.34	21.30	20.90	21.15	21.11
ERP(Watts)	0.1276	0.1365	0.1346	0.1288	0.1361	0.1349	0.1230	0.1303	0.1291

LTE Band 12 (GT - LC = 1.50 dB) 16QAM			
Bandwidth	10M		
Channel	23060	23095	23130
	(Low)	(Mid)	(High)
Frequency (MHz)	704	707.5	711
Conducted Power (dBm)	21.51	21.54	21.91
Conducted Power (Watts)	0.1416	0.1426	0.1552
ERP(dBm)	20.86	20.89	21.26
ERP(Watts)	0.1219	0.1227	0.1337

Appendix B. Test Results of Radiated Test

Radiated Spurious Emission

LTE Band 2 / 20MHz / QPSK								
Channel	Frequency (MHz)	EIRP (dBm)	Limit (dBm)	Over Limit (dB)	S.G. Power (dBm)	TX Cable loss (dB)	TX Antenna Gain (dBi)	Polarization (H/V)
Lowest	3702	-49.38	-13	-36.38	-61.64	2.641	14.90	H
	5553	-51.07	-13	-38.07	-62.93	2.94	14.80	H
	7404	-50.41	-13	-37.41	-60.18	3.39	13.16	H
	3702	-49.34	-13	-36.34	-61.60	2.64	14.90	V
	5553	-52.00	-13	-39.00	-63.86	2.94	14.80	V
	7404	-50.15	-13	-37.15	-59.92	3.39	13.16	V
Middle	3741	-55.95	-13	-42.95	-68.21	2.641	14.90	H
	5613	-55.46	-13	-42.46	-67.32	2.94	14.80	H
	7488	-53.31	-13	-40.31	-63.08	3.39	13.16	H
	3741	-54.73	-13	-41.73	-66.99	2.64	14.90	V
	5613	-54.49	-13	-41.49	-66.35	2.94	14.80	V
	7488	-52.74	-13	-39.74	-62.51	3.39	13.16	V
Highest	3783	-54.99	-13	-41.99	-67.25	2.641	14.90	H
	5673	-54.82	-13	-41.82	-66.68	2.94	14.80	H
	7560	-54.63	-13	-41.63	-64.40	3.39	13.16	H
	3783	-53.10	-13	-40.10	-65.36	2.64	14.90	V
	5673	-53.45	-13	-40.45	-65.31	2.94	14.80	V
	7560	-53.93	-13	-40.93	-63.70	3.39	13.16	V

Remark: Spurious emissions within 30-1000MHz were found more than 20dB below limit line.

LTE Band 4 / 20MHz / QPSK								
Channel	Frequency (MHz)	EIRP (dBm)	Limit (dBm)	Over Limit (dB)	S.G. Power (dBm)	TX Cable loss (dB)	TX Antenna Gain (dBi)	Polarization (H/V)
Lowest	3423	-37.84	-13	-24.84	-48.58	2.604	13.34	H
	5133	-52.47	-13	-39.47	-62.98	3.011	13.52	H
	6843	-56.44	-13	-43.44	-66.64	3.271	13.47	H
	3423	-45.45	-13	-32.45	-56.19	2.604	13.34	V
	5133	-53.44	-13	-40.44	-63.95	3.011	13.52	V
	6843	-55.80	-13	-42.80	-66.00	3.271	13.47	V
Middle	3447	-36.68	-13	-23.68	-47.42	2.604	13.34	H
	5172	-50.96	-13	-37.96	-61.47	3.011	13.52	H
	6894	-56.09	-13	-43.09	-66.29	3.271	13.47	H
	3447	-47.57	-13	-34.57	-58.31	2.604	13.34	V
	5172	-54.88	-13	-41.88	-65.39	3.011	13.52	V
	6894	-55.91	-13	-42.91	-66.11	3.271	13.47	V
Highest	3471	-42.80	-13	-29.80	-53.54	2.604	13.34	H
	5208	-50.78	-13	-37.78	-61.29	3.011	13.52	H
	6945	-55.40	-13	-42.40	-65.60	3.271	13.47	H
	3471	-50.61	-13	-37.61	-61.35	2.604	13.34	V
	5208	-54.51	-13	-41.51	-65.02	3.011	13.52	V
	6945	-54.90	-13	-41.90	-65.10	3.271	13.47	V

Remark: Spurious emissions within 30-1000MHz were found more than 20dB below limit line.

LTE Band 5 / 10MHz / QPSK								
Channel	Frequency (MHz)	ERP (dBm)	Limit (dBm)	Over Limit (dB)	S.G. Power (dBm)	TX Cable loss (dB)	TX Antenna Gain (dBi)	Polarization (H/V)
Lowest	1650	-50.71	-13	-37.71	-57.68	1.58	10.70	H
	2474	-47.40	-13	-34.40	-55.65	2.102	12.50	H
	3300	-62.53	-13	-49.53	-71.42	2.856	13.90	H
	1650	-58.49	-13	-45.49	-65.46	1.58	10.70	V
	2474	-51.83	-13	-38.83	-60.08	2.10	12.50	V
	3300	-63.01	-13	-50.01	-71.90	2.86	13.90	V
Middle	1664	-49.68	-13	-36.68	-56.65	1.58	10.70	H
	2496	-41.13	-13	-28.13	-49.38	2.102	12.50	H
	3330	-56.02	-13	-43.02	-64.91	2.856	13.90	H
	1664	-52.08	-13	-39.08	-59.05	1.58	10.70	V
	2496	-38.88	-13	-25.88	-47.13	2.10	12.50	V
	3330	-57.39	-13	-44.39	-66.28	2.86	13.90	V
Highest	1680	-47.86	-13	-34.86	-54.83	1.58	10.70	H
	2518	-41.51	-13	-28.51	-49.76	2.102	12.50	H
	3360	-62.97	-13	-49.97	-71.86	2.856	13.90	H
	1678	-51.90	-13	-38.90	-58.87	1.58	10.70	V
	2518	-45.86	-13	-32.86	-54.11	2.10	12.50	V
	3360	-62.77	-13	-49.77	-71.66	2.86	13.90	V

Remark: Spurious emissions within 30-1000MHz were found more than 20dB below limit line.

LTE Band 12 / 10MHz / QPSK								
Channel	Frequency (MHz)	ERP (dBm)	Limit (dBm)	Over Limit (dB)	S.G. Power (dBm)	TX Cable loss (dB)	TX Antenna Gain (dBi)	Polarization (H/V)
Lowest	1400	-47.42	-13	-34.42	-54.39	1.58	10.70	H
	2098	-34.28	-13	-21.28	-42.53	2.102	12.50	H
	2798	-64.22	-13	-51.22	-73.11	2.856	13.90	H
	1400	-45.81	-13	-32.81	-52.78	1.58	10.70	V
	2098	-38.15	-13	-25.15	-46.40	2.10	12.50	V
	2798	-63.77	-13	-50.77	-72.66	2.86	13.90	V
Middle	1406	-56.63	-13	-43.63	-63.60	1.58	10.70	H
	2110	-32.59	-13	-19.59	-40.84	2.102	12.50	H
	2812	-63.32	-13	-50.32	-72.21	2.856	13.90	H
	1406	-55.38	-13	-42.38	-62.35	1.58	10.70	V
	2110	-37.85	-13	-24.85	-46.10	2.10	12.50	V
	2812	-63.26	-13	-50.26	-72.15	2.86	13.90	V
Highest	1414	-47.28	-13	-34.28	-54.25	1.58	10.70	H
	2120	-36.57	-13	-23.57	-44.82	2.102	12.50	H
	2826	-63.56	-13	-50.56	-72.45	2.856	13.90	H
	1414	-45.09	-13	-32.09	-52.06	1.58	10.70	V
	2120	-40.07	-13	-27.07	-48.32	2.10	12.50	V
	2826	-63.08	-13	-50.08	-71.97	2.86	13.90	V

Remark: Spurious emissions within 30-1000MHz were found more than 20dB below limit line.