Quick Setup Guide

IM25 UNATTENDED PAYMENT TERMINAL

PAX TECHNOLOGY LIMITED

1. Contents

Please make sure the following items are included with your IM25 unattended payment terminal. If any items are missing, contact your dealer.

1. 1 x IM25 Unattended Payment Terminal
2. 4 x M4 nuts
3. 4 x M4 screws
4. 1 x IM25 Mounting Bracket

2. Product Description

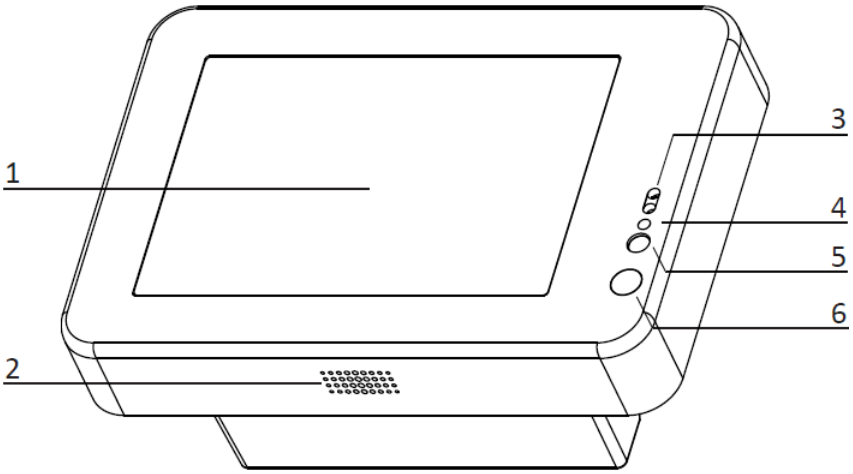

Figure 1: front view

1. LCD touchscreen
2. speaker
3. proximity and light detector
4. LED status indicator
5. camera flash LED
6. camera lens

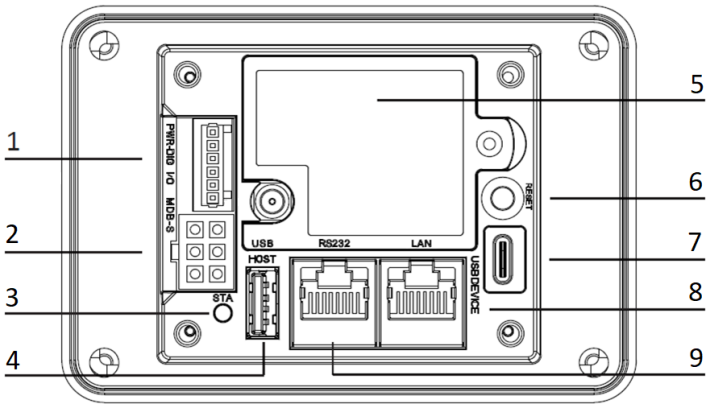

Figure 2: back view

1. Digital IO port
2. MDB port
3. status LED
4. USB Type-A port

5. back cover
6. reset button
7. USB Type-C port
8. Ethernet port (RJ45)
9. RS232 (RJ45)

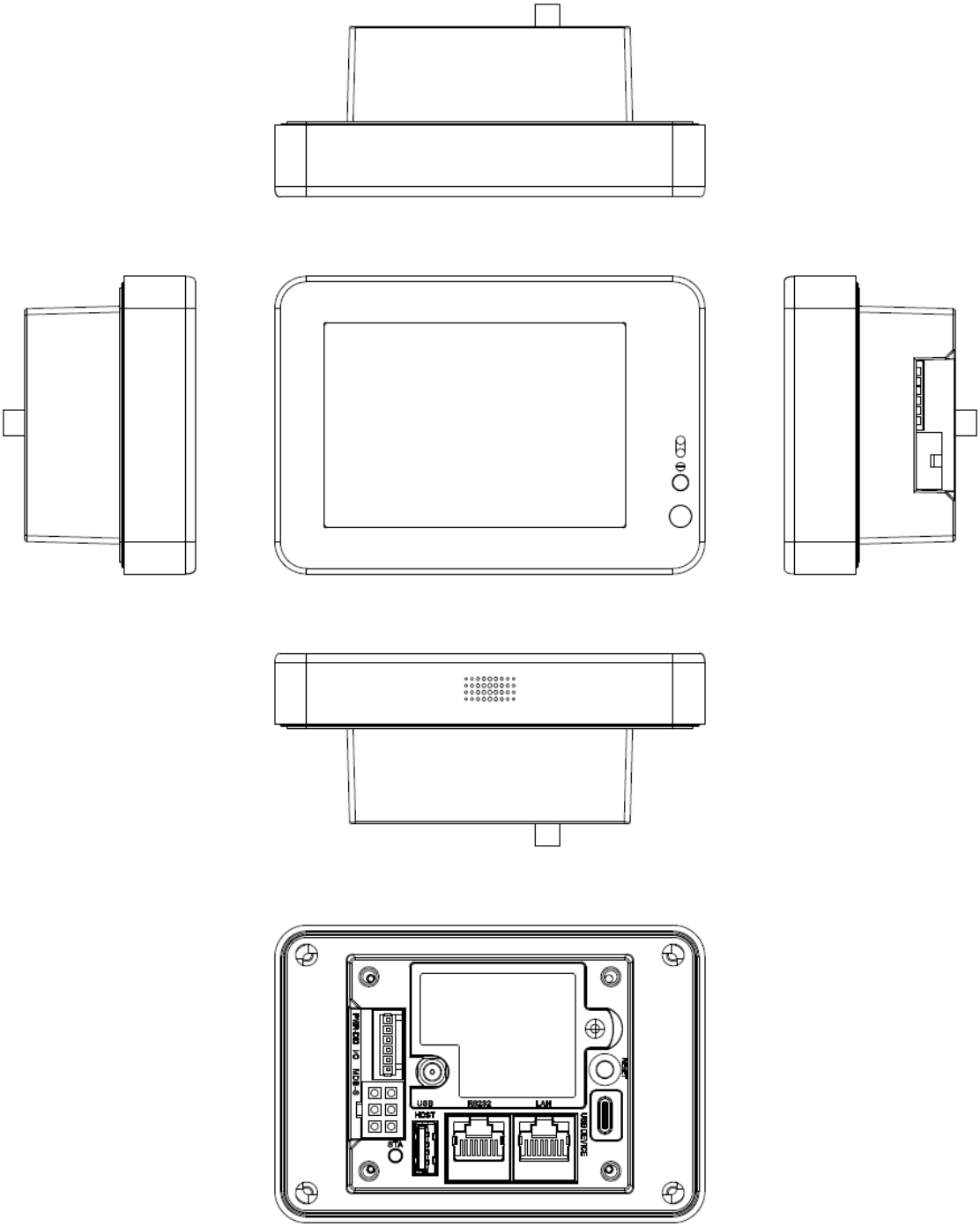

Figure 3: view from all sides

3. INSTALLATION

1. SAM Cards

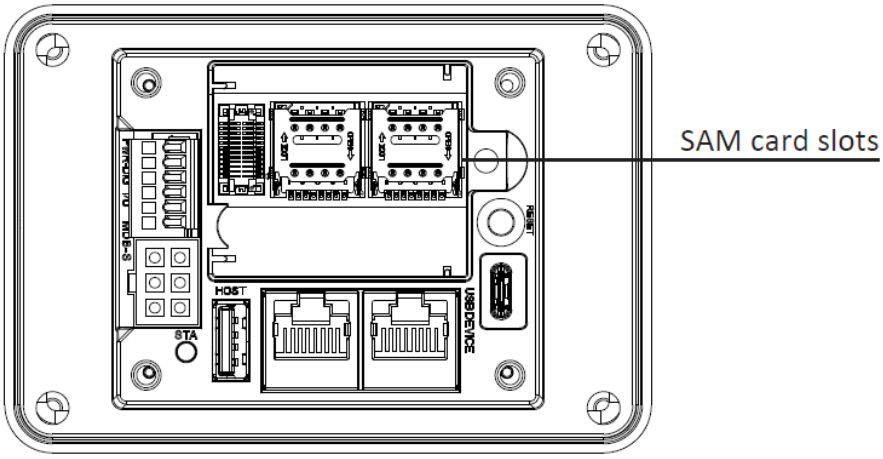

Figure 4: SAM card slots

The 2 SAM cards slots of the IM25 can be seen while the back cover is removed. To install a SAM card, open the card slot and insert the card into the slot with the contacts facing towards the IM25 and with the clipped corner of the card aligned with the slot, then lock the mount with the card inside.

Note

Do not power on the IM25 while installing or removing SAM cards. To reassemble the device, replace the back cover and screw it in place.

2. Device Dimensions

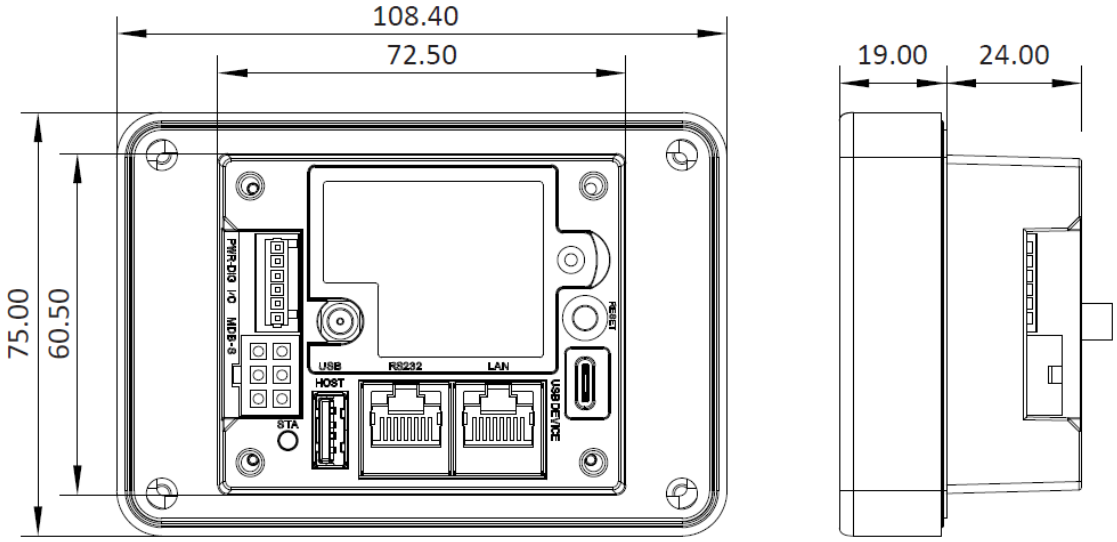

Figure 5: device dimensions (mm)

3. Device Installation

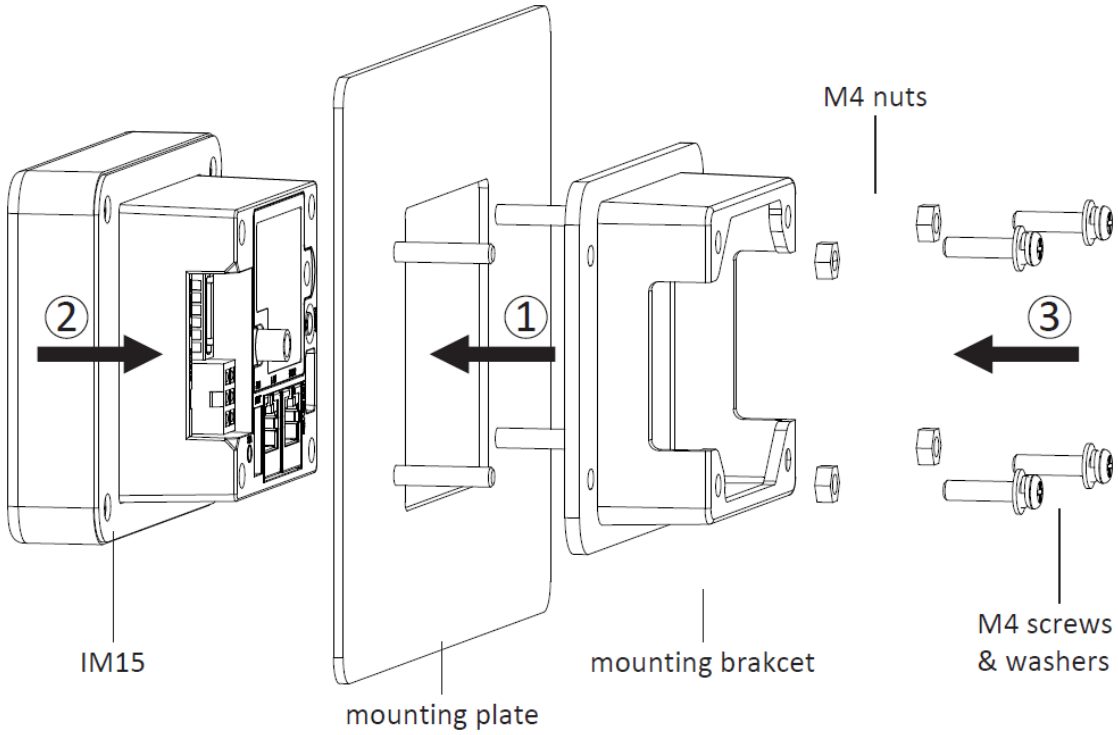

Figure 6: device installation

1) The back face of the installation should have four stud bolts corresponding to the mounting points located on mounting bracket. Slide the mounting bracket into place with the orientation shown in figure 7 and then fix it in place with four M4 nuts.
2) Slide the IM25 unit into place with the orientation shown in figure 7. The back portion of the device should rest securely inside the mounting bracket.
3) Apply a torque of 0.4 to 0.6 Nm to each of the four M4 screws to secure the IM25 unit to its mounting bracket.

4. INSTRUCTIONS

1. Power on/off

   Power on: Plug the IM25 into an appropriate power source (7 to 48 VDC) via the MDB port, the digital IO port, or the RS232 RJ45 port.

   Power off: Disconnect the IM25 from the power source it is connected to.
2. Contactless Transactions

   When the device is ready to accept a contactless transaction, the contactless icon should appear on screen. Orient the card or NFC device parallel to the screen and then hold it at a distance of 4 cm or less directly above the contactless icon.
3. Code Scanner Transactions

   When the device indicates on screen that it is ready to scan a 1D or 2D code, orient the code parallel to the code scanning camera and then place it directly in front of the camera.
4. Environmental Conditions

   Storage Temperature: -30°C ~ 70°C (-22°F ~ 158°F)

   Operating Temperature: -20°C ~ 70°C (-3°F ~ 158°F)

   Relative Humidity: 5% ~ 95% (non-condensing)

5. MAINTENANCE AND USAGE

1. If any cables become damaged, seek a replacement.
2. Do not insert unknown materials into any port on the IM25, this may cause serious damage to the device.
3. Only qualified personnel should repair this product.
4. The IM25 is designed for outdoor use; however, during normal use its surface should still be keep clear of dirt and possible liquid contaminants.
5. While the IM25 is designed to resist ingress of dust and liquids, it is not designed to resist pressurized liquids such as water hoses. Keep the back of the device away from dust and liquids as much as possible.
6. Make sure the various cables connect to provide the appropriate voltages at the proper pins.

6. COMPLIANCE STATEMENTS

FCC COMPLIANCE STATEMENT

This device complies with Part 15 of the FCC Rules. Operation is subject to the following two conditions:

1) this device may not cause harmful interference, and
2) this device must accept any interference received, including interference that may cause undesired operation.

Changes or modifications not expressly approved by the party responsible for compliance could void the user's authority to operate the equipment.

Warning

This equipment has been tested and found to comply with the limits for a Class B digital device, pursuant to Part 15 of the FCC Rules. These limits are designed to provide reasonable protection against harmful interference in a residential installation.

This equipment generates, uses and can radiate radio frequency energy and, if not installed and used in accordance with the instructions, may cause harmful interference to radio communications.

However, there is no guarantee that interference will not occur in a particular installation. If this equipment does cause harmful interference to radio or television reception, which can be determined by turning the equipment off and on, the user is encouraged to try to correct the interference by one of the following measures:

- Reorient or relocate the receiving antenna.
- Increase the separation between the equipment and receiver.
- Connect the equipment into an outlet on a circuit different from that to which the receiver is connected.
- Consult the dealer or an experienced radio/TV technician for help.

Note

Any changes or modifications not expressly approved by the manufacturer could void the user's authority to operate this equipment.

Radiation Exposure

This device meets the government's requirements for exposure to radio waves. This device is designed and manufactured not to exceed the emission limits for exposure to radio frequency

(RF) energy set by the Federal Communications Commission of the U.S. Government. This device complies with FCC radiation exposure limits set forth for an uncontrolled environment. In order to avoid the possibility of exceeding the FCC radio frequency exposure limits, human proximity to the antenna shall not be less than 20 cm during normal operation.

INDUSTRY CANADA STATEMENT

This device contains licence-exempt transmitter(s)/receiver(s) that comply with Innovation, Science and Economic Development Canada's licence-exempt RSS(s). Operation is subject to the following two conditions:

1) this device may not cause interference, and
2) this device must accept any interference, including interference that may cause undesired operation of the device.

Le présent appareil est conforme aux CNR d'Industrie Canada applicables aux appareils radio exempts de licence. L'exploitation est autorisée aux deux conditions suivantes:

1) l'appareil ne doit pas produire de brouillage, et
2) l'utilisateur de l'appareil doit accepter tout brouillage radioélectrique subi, même si le brouillage est susceptible d'en compromettre le fonctionnement.

This device and its antenna(s) must not be co-located or operating in conjunction with any other antenna or transmitter, except tested built-in radios.

Cet appareil et son antenne ne doivent pas être situés ou fonctionner en conjonction avec une autre antenne ou un autre émetteur, exception faites des radios intégrées qui ont été testées.

The Country Code Selection feature is disabled for products marketed in the US/Canada.

La fonction de sélection de l'indicatif du pays est désactivée pour les produits commercialisés aux États-Unis et au Canada.

Radiation Exposure Statement

This device complies with ISED RSS-102 RF exposure limits set forth for an uncontrolled environment. In order to avoid the possibility of exceeding the IC RSS-102 RF exposure limits, human proximity to the antenna shall not be less than 20 cm (7.9 inches) during normal operation.

Déclaration d'exposition aux radiations

Cet appareil est conforme aux limites d'exposition aux rayonnements de la CNR-102 définies pour un environnement non contrôlé. Afin d'éviter la possibilité de dépasser les limites d'exposition aux fréquences radio de la CNR-102, la proximité humaine à l'antenne ne doit pas être inférieure à 20 cm (7.9 pouces) pendant le fonctionnement normal.

7. INDEX OF ICONS

do not throw away, requires professional recycling

Class II equipment

for indoor use only

energy efficiency marking (level VI)

AC voltage

DC voltage

Although PAX Computer Technology (Shenzhen) Co., Ltd. strives to maintain the accuracy of the information presented in this document, it reserves the right to change product specifications without prior notification and does not guarantee that the material presented herein will accurately reflect the set up, installation, or use of PAX products.

Manufacture: PAX Computer Technology (Shenzhen) Co. Ltd.
Address: PAX Technology Building, Shanxia Community, Pinghu Sub-district, Longgang District, Shenzhen, Guangdong, PRC
Tel: +86 755-86169630
Website: www.pax.com.cn

Responsible Party: PAX Technology Inc.
Address: 8880 Freedom Crossing Trail, Building 400, 3rd Floor, Suite 300, Jacksonville, Florida 32256
Tel: 1-877-859-0099
Website: www.pax.us