# DFS TEST REPORT

| | |
|---|---|
| **Applicant:** | PAX Technology Limited |
| **Address of Applicant:** | Room 2416, 24/F., Sun Hung Kai Centre, 30 Harbour, Hong Kong |
| **Equipment Under Test (EUT)** | |
| Product Name: | POS Terminal |
| Model No.: | Q25 |
| Trade mark: | PAX |
| **FCC ID:** | V5PQ25W |
| **Applicable standards:** | FCC CFR Title 47 Part 15 Subpart E Section 15.407 |
| **Date of sample receipt:** | 15 Aug., 2022 |
| **Date of Test:** | 16 Aug., to 02 Dec., 2022 |
| **Date of report issued:** | 05 Dec., 2022 |
| **Test Result:** | PASS* |

***In the configuration tested, the EUT complied with the standards specified above.**

| | | | |
|---|---|---|---|
| ***Tested by:*** | Mike.ou<br>***Test Engineer*** | ***Date:*** | *05 Dec., 2022* |
| ***Reviewed by:*** | Winner Zhang<br>***Project Engineer*** | ***Date:*** | *05 Dec., 2022* |
| ***Approved by:*** | Chris.Zhang<br>***Manager*** | ***Date:*** | *05 Dec., 2022* |

This equipment has been shown to be capable of compliance with the applicable technical standards as indicated in the measurement report and was tested in accordance with the measurement procedures specified in above the application standard version. Test results reported herein relate only to the item(s) tested.

This document cannot be reproduced except in full, without prior written approval of the Company. Any unauthorized alteration, forgery or falsification of the content or appearance of this document is unlawful and offenders may be prosecuted to the fullest extent of the law. Unless otherwise stated the results shown in this test report refer only to the sample(s) tested and such sample(s) are retained for 90 days only.

# 2 Version

| Version No. | Date | Description |
|---|---|---|
| *00* | *05 Dec., 2022* | *Original* |
| | | |
| | | |
| | | |
| | | |

# 3 Contents

Page


1 COVER PAGE ..... 1

2 VERSION ..... 2

3 CONTENTS ..... 3

4 TEST SUMMARY ..... 4

5 GENERAL INFORMATION ..... 5

5.1 CLIENT INFORMATION ..... 5
5.2 GENERAL DESCRIPTION OF E.U.T. ..... 5
5.3 TEST ENVIRONMENT AND MODE ..... 5
5.4 DESCRIPTION OF SUPPORT UNITS ..... 5
5.5 RELATED SUBMITTAL(S) / GRANT (S) ..... 5
5.6 ADDITIONS TO, DEVIATIONS, OR EXCLUSIONS FROM THE METHOD ..... 5
5.7 LABORATORY FACILITY ..... 6
5.8 LABORATORY LOCATION ..... 6
5.9 TEST INSTRUMENTS LIST ..... 6

6 DFS TECHNICAL REQUIREMENTS ..... 7

6.1 DFS PARAMETERS ..... 7
6.2 DFS TECHNICAL REQUIREMENTS ..... 9
6.3 DFS THRESHOLD LEVEL ..... 9
6.4 TEST SETUP BLOCK ..... 9
6.5 EUT CONFIGURATION FOR DFS TEST ..... 10

7 TEST RESULT ..... 11

7.1 VERIFICATION OF RADAR TYPE AND LEVEL ..... 11
7.2 CHANNEL MOVE TIME AND CHANNEL CLOSING TRANSMISSION TIME ..... 13

8 TEST SETUP PHOTO ..... 15

# 4 Test Summary

| Test Items | Limit | Result |
|---|---|---|
| Channel Availability Check | > 60 seconds | N/A |
| UNII Detection Bandwidth | > 100% of the UNII 99% transmission power bandwidth | N/A |
| Statistical Performance Check | Radar type 1,2,3,4 ≧ 60%<br>Aggregate Radar type 1~4 and 5 ≧ 80%<br>Radar type 6 ≧ 70% | N/A |
| Channel Move Time | < 10 seconds | Pass |
| Channel Closing Transmission Time | < 20ms + aggregate of 60ms over remaining 10 second period | Pass |
| Non-Occupancy Period | > 30 minutes | N/A |

***Remark:***

1. *Pass: means meet the requirements.*
2. *N/A: means not applicable.*
3. *The cable insertion loss used by "RF Output Power" and other conduction measurement items is 0.5dB (provided by the customer).*

| | |
|---|---|
| ***Test Method:*** | *ANSI C63.4-2014*<br>*ANSI C63.10-2013*<br>*KDB 789033 D02 General UNII Test Procedures New Rules v02r01* |

# 5 General Information

## 5.1 Client Information

| | |
|---|---|
| Applicant: | PAX Technology Limited |
| Address: | Room 2416, 24/F., Sun Hung Kai Centre, 30 Harbour, Hong Kong |
| Manufacturer: | PAX Computer Technology (Shenzhen) Co., Ltd. |
| Address: | 401 and 402, Building 3, Shenzhen Software Park, Nanshan District, Shenzhen City, Guangdong Province, P.R.C |

## 5.2 General Description of E.U.T.

| | |
|---|---|
| Product Name: | POS Terminal |
| Model No.: | Q25 |
| Transmitter frequency range: | 5250MHz~5350MHz<br>5470MHz~5725MHz |
| Modulation type: | OFDM |
| WLAN Function: | 802.11a/802.11n/802.11ac |
| Bandwidth: | 20MHz/40MHz/80MHz |
| Antenna Type: | Internal Antenna |
| Antenna Gain: | 3.65 dBi |
| DFS Operation Type: | ☐ Master Device<br>☐ Slaver Device with Radar detection function<br>☒ Slaver Device without Radar detection function |
| AC Adapter: | Model: A18A-050100U-US2<br>Input: AC100-240V, 50/60Hz, 0.2A<br>Output: DC 5.0V, 1.0A |
| Test Sample Condition: | The test samples were provided in good working order with no visible defects. |

## 5.3 Test environment and mode

| | |
|---|---|
| Data Load mode: | Keep the EUT in normal transmitting mode by WiFi |
| Temperature: | 20 ~ 25 ℃ |
| Humidity: | 60% ~ 65% |
| Atmospheric pressure: | 1012 kPa |

## 5.4 Description of Support Units

| Manufacturer | Description | Model | Serial Number |
|---|---|---|---|
| LENOVO | Laptop | SL510 | 2847A65 |
| WAVLINK | WiFi Router | WL-WN575A2 | WL1512260097 |

## 5.5 Related Submittal(s) / Grant (s)

This is an original grant, no related submittals and grants.

## 5.6 Additions to, deviations, or exclusions from the method

No

## 5.7 Laboratory Facility

The test facility is recognized, certified, or accredited by the following organizations:

- **FCC - Designation No.: CN1211**

JianYan Testing Group Shenzhen Co., Ltd. has been accredited as a testing laboratory by FCC(Federal Communications Commission). The test firm Registration No. is 727551.

- **ISED – CAB identifier.: CN0021**

The 3m Semi-anechoic chamber and 10m Semi-anechoic chamber of JianYan Testing Group Shenzhen Co., Ltd. has been Registered by Certification and Engineering Bureau of Industry Canada for radio equipment testing with Registration No.: 10106A-1.

- **CNAS - Registration No.: CNAS L15527**

JianYan Testing Group Shenzhen Co., Ltd. is accredited to ISO/IEC 17025:2017 General Requirements for the Competence of Testing and Calibration laboratories for the competence of testing. The Registration No. is CNAS L15527.

- **A2LA - Registration No.: 4346.01**

This laboratory is accredited in accordance with the recognized International Standard ISO/IEC 17025:2017 General requirements for the competence of testing and calibration laboratories. The test scope can be found as below link: https://portal.a2la.org/scopepdf/4346-01.pdf

## 5.8 Laboratory Location

JianYan Testing Group Shenzhen Co., Ltd.
Address: No.101, Building 8, Innovation Wisdom Port, No.155 Hongtian Road, Huangpu Community, Xinqiao Street, Bao'an District, Shenzhen, Guangdong, People's Republic of China.
Tel: +86-755-23118282, Fax: +86-755-23116366
Email: info-JYTee@lets.com, Website: http://jyt.lets.com

## 5.9 Test Instruments list

| Conducted Method: | | | | | |
|---|---|---|---|---|---|
| **Test Equipment** | **Manufacturer** | **Model No.** | **Manage No.** | **Cal. Date (mm-dd-yy)** | **Cal. Due date (mm-dd-yy)** |
| Spectrum Analyzer | Keysight | N9010B | WXJ004-3 | 10-27-2021 | 10-26-2022 |
| | | | | 10-17-2022 | 10-16-2023 |
| DC Power Supply | Keysight | E3642A | WXJ025-2 | N/A | |
| Temperature Humidity Chamber | ZHONG ZHI | CZ-A-80D | WXJ032-3 | 03-19-2021 | 03-18-2023 |
| Power Detector Box | MWRFTEST | MW100-PSB | WXJ007-4 | 11-19-2021 | 11-18-2022 |
| | | | | 10-17-2022 | 10-16-2023 |
| RF Control Unit | MWRFTEST | MW100-RFCB | WXG006 | N/A | |
| Test Software | MWRFTEST | MTS 8310 | Version: 2.0.0.0 | | |

# 6 DFS Technical Requirements

## 6.1 DFS Parameters

| Table D.1: Applicability of DFS Requirements Prior to Use of a Channel | | | |
|---|---|---|---|
| Requirement | Operational Mode | | |
| | Master | Client Without Radar Detection | Client With Radar Detection |
| Non-Occupancy period | Yes | Not required | Yes |
| DFS Detection Threshold | Yes | Not required | Yes |
| Channel Availability Check Time | Yes | Not required | Not required |
| U-NII Detection Bandwidth | Yes | Not required | Yes |

| Table D.2: Applicability of DFS requirements during normal operation | | |
|---|---|---|
| Requirement | Operational Mode | |
| | Master | Client Without Radar Detection |
| DFS Detection Threshold | Yes | Not required |
| Channel Closing Transmission Time | Yes | Yes |
| Channel Move Time | Yes | Yes |
| U-NII Detection Bandwidth | Yes | Not required |

| Additional requirements for devices with multiple bandwidth modes | Operational Mode | |
|---|---|---|
| | Master Device or Client with Radar Detection | Client Without Radar Detection |
| U-NII Detection Bandwidth and Statistical Performance Check | All BW modes must be tested | Not required |
| Channel Move Time and Channel Closing Transmission Time | Test using widest BW mode available | Test using the widest BW mode available for the link |
| All other tests | Any single BW mode | Not required |
| Note: Frequencies selected for statistical performance check (Section 7.8.4) should include several frequencies within the radar detection bandwidth and frequencies near the edge of the radar detection bandwidth. For 802.11 devices it is suggested to select frequencies in each of the bonded 20 MHz channels and the channel center frequency. | | |

| Table D.3: DFS Detection Thresholds | |
|---|---|
| Maximum Transmit Power | Value (See Notes 1,2, and 3) |
| EIRP ≧ 200 mW | -64 dBm |
| EIRP < 200 mW and power spectral density < 10 dBm/MHz | -62 dBm |
| EIRP < 200 mW that do not meet the power spectral density requirement | -64 dBm |
| Note 1: This is the level at the input of the receiver assuming a 0 dBi receive antenna.<br>Note 2: Throughout these test procedures an additional 1 dB has been added to the amplitude of the test transmission waveforms to account for variations in measurement equipment. This will ensure that the test signal is at or above the detection threshold level to trigger a DFS response.<br>Note 3: EIRP is based on the highest antenna gain. For MIMO devices refer to KDB Publication 662911 D01. | |

| Table D.4: DFS requirement values | |
|---|---|
| **Parameter** | **Value** |
| Non-occupancy period | Minimum 30 minutes |
| Channel Availability Check Time | 60 seconds |
| Channel Move Time | 10 seconds (See Note 1) |
| Channel Closing Transmission Time | 200 ms + an aggregate of 60ms over remaining 10 second period (See Notes 1 and 2) |
| U-NII Detection Bandwidth | Minimum 100% of the UNII 99% transmission power bandwidth (See Note 3) |

Note 1: Channel Move Time and the Channel Closing Transmission Time should be performed with Radar Type 0. The measurement timing begins at the end of the Radar Type 0 burst.
Note 2: The Channel Closing Transmission Time is comprised of 200 milliseconds starting at the beginning of the Channel Move Time plus any additional intermittent control signals required to facilitate a Channel move (an aggregate of 60 milliseconds) during the remainder of the 10 second period. The aggregate duration of control signals will not count quiet periods in between transmissions.
Note 3: During the U-NII Detection Bandwidth detection test, radar type 0 should be used. For each frequency step, the minimum percentage of detection is 90 percent. Measurements are performed with no data traffic.

| Table D.5: Short Pulse Radar Test Waveforms | | | | | |
|---|---|---|---|---|---|
| Radar Type | Pulse Width (μsec) | PRI (μsec) | Number of Pulses | Minimum Percentage of Successful Detection | Minimum Number of Trials |
| 0 | 1 | 1428 | 18 | See Note 1 | See Note 1 |
| 1 | 1 | Test A<br>Test B | $\text{Roundup}\left\{\left(\frac{1}{360}\right)\cdot\left(\frac{19\cdot 10^6}{\text{PRI}_{\mu sec}}\right)\right\}$ | 60% | 30 |
| 2 | 1-5 | 150-230 | 23-29 | 60% | 30 |
| 3 | 6-10 | 200-500 | 16-18 | 60% | 30 |
| 4 | 11-20 | 200-500 | 12-16 | 60% | 30 |
| Aggregate (Radar Types 1-4) | | | | 80% | 120 |

Note 1: Short Pulse Radar Type 0 should be used for the detection bandwidth test, channel move time, and channel closing time tests.

| Table D.6: Long Pulse Radar Test Waveform | | | | | | | |
|---|---|---|---|---|---|---|---|
| Radar Type | Pulse Width (μsec) | Chirp Width (MHz) | PRI (μsec) | Number of Pulses per Burst | Number of Bursts | Minimum Percentage of Successful Detection | Minimum Number of Trials |
| 5 | 50-100 | 5-20 | 1000-2000 | 1-3 | 8-20 | 80% | 30 |

**Long Pulse Radar Test Signal Wave form 12 second transmission**

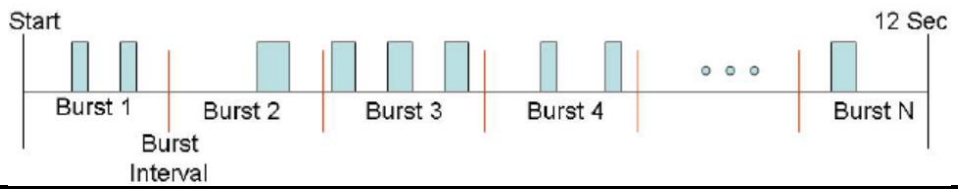


| Table D.7: Frequency Hopping Radar Test Waveform | | | | | | | |
|---|---|---|---|---|---|---|---|
| Radar Type | Pulse Width (μsec) | PRI (μsec) | Pulses per Hop | Hopping Rate (kHz) | Hopping Sequence Length (msec) | Minimum Percentage of Successful Detection | Minimum Number of Trials |
| 6 | 1 | 333 | 0 | 0.333 | 300 | 70% | 30 |

## 6.2 DFS Technical Requirements

| Requirement | DFS Operational mode | | |
|---|---|---|---|
| | ☐ Master | ☒ Slave without Radar Detection | ☐ Slave with Radar Detection |
| Channel Availability Check | √ | Not Required | Not Required |
| UNII Detection Bandwidth | √ | Not Required | √ |
| Statistical Performance Check | √ | Not Required | √ |
| Channel Move Time | √ | √ | √ |
| Channel Closing Transmission Time | √ | √ | √ |
| Non-Occupancy Period | √ | Not Required | √ |

## 6.3 DFS Threshold Level

| DFS Threshold Level | |
|---|---|
| 5250MHz ~ 5350MHz | -62 dBm @ antenna connector |
| 5470MHz ~ 5725MHz | -62 dBm @ antenna connector |
| Note: The worst case level was selected to perform the test. | |

## 6.4 Test Setup Block

☐ **For master device**

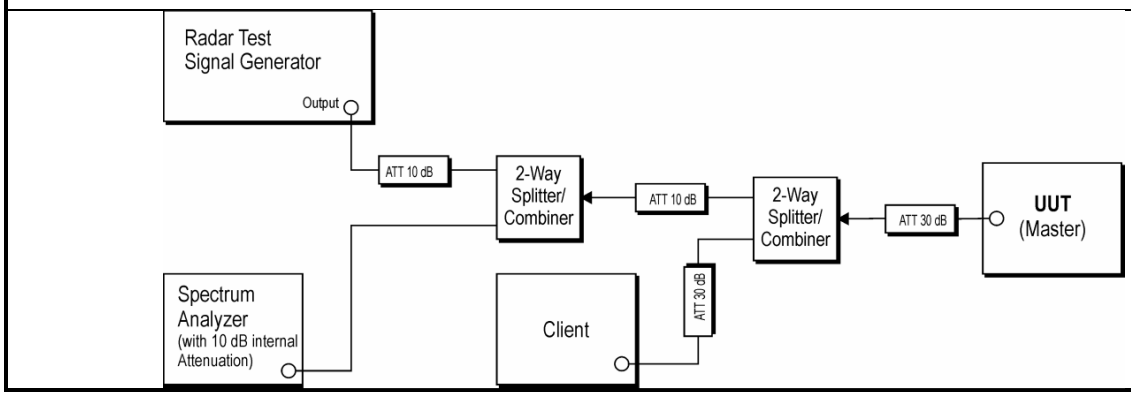


☒ **For Slaver without radar detection function device**

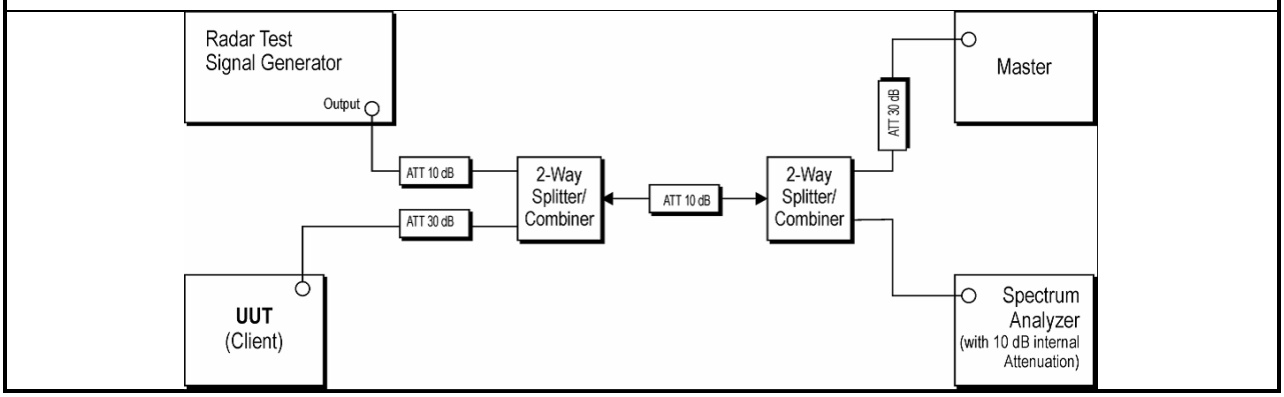

☐ **For Slaver with radar detection function device**

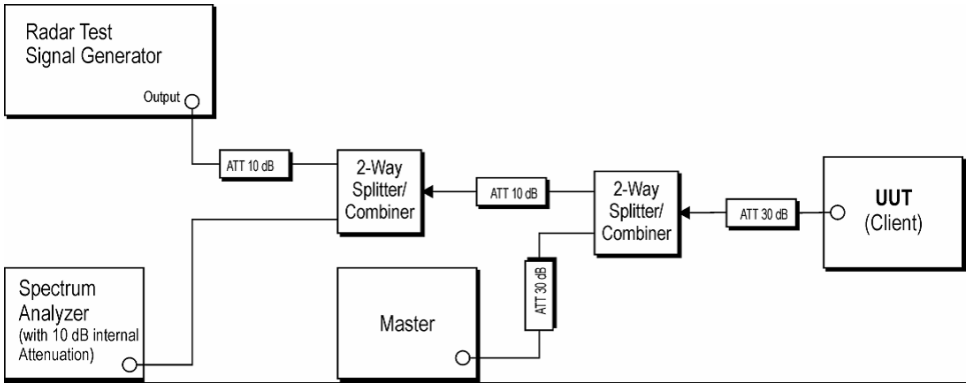


## 6.5 EUT Configuration for DFS Test

| Test Items | Channel Frequency |
|---|---|
| Channel Move Time | 5290MHz, 5320MHz<br>5610MHz, 5700MHz |
| Channel Closing Transmission Time | 5290MHz, 5320MHz<br>5610MHz, 5700MHz |

# 7 Test Result

## 7.1 Verification of Radar Type and Level

**5.3G**

**5290MHz**

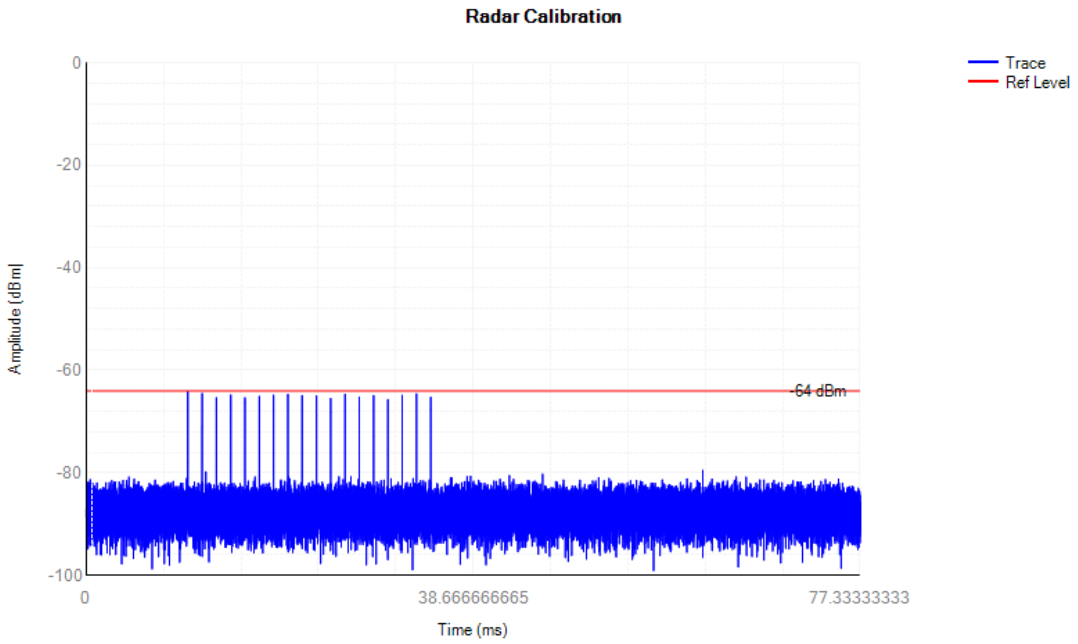


**Radar Type 0**

**5320MHz**

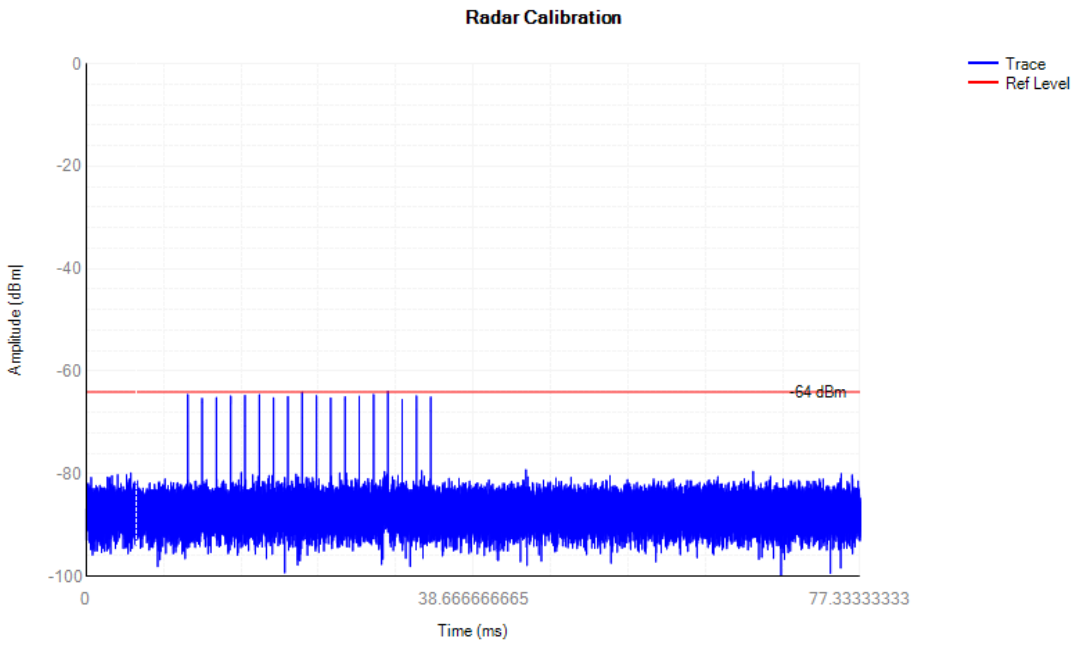


**Radar Type 0**

**5.6G**

**5610MHz**

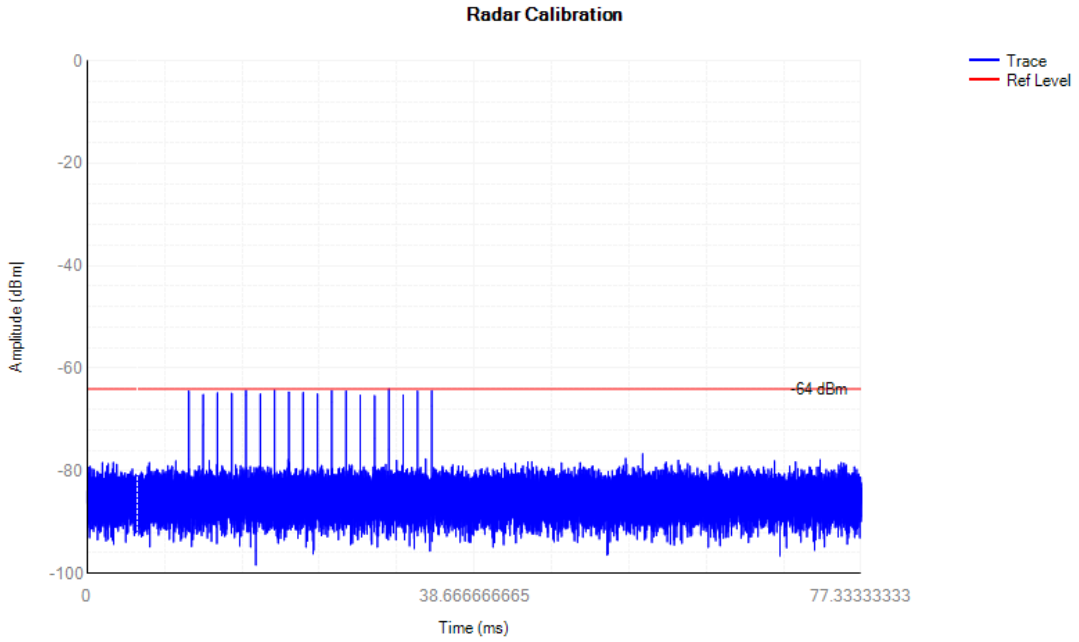


**Radar Type 0**

**5700MHz**

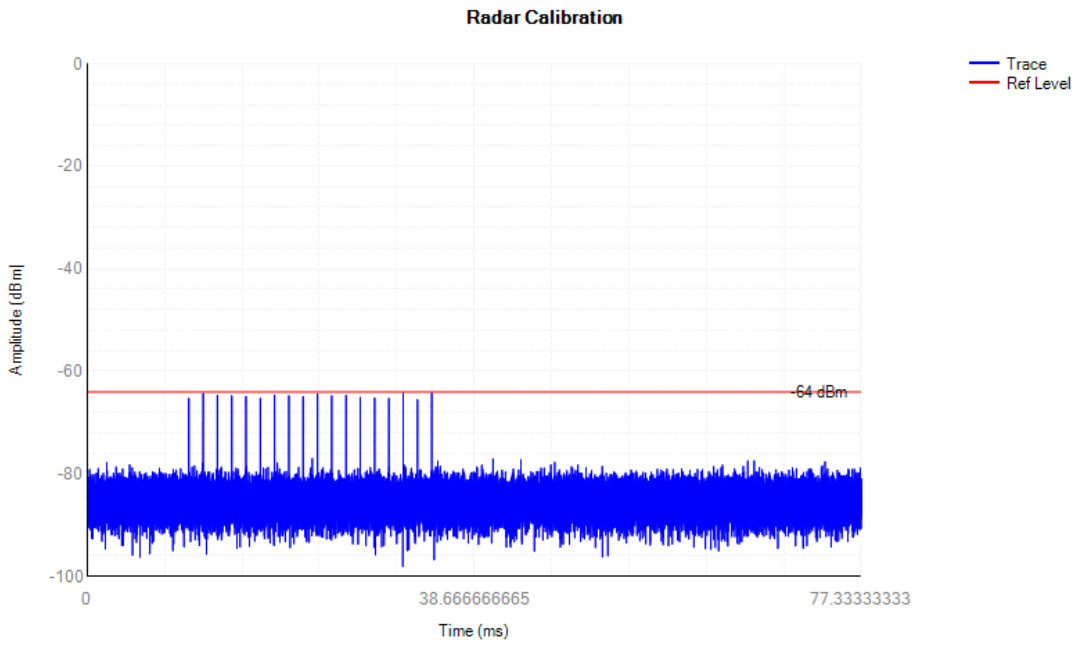


**Radar Type 0**

## 7.2 Channel Move Time and Channel Closing Transmission Time

**5.3G**

**5290MHz**

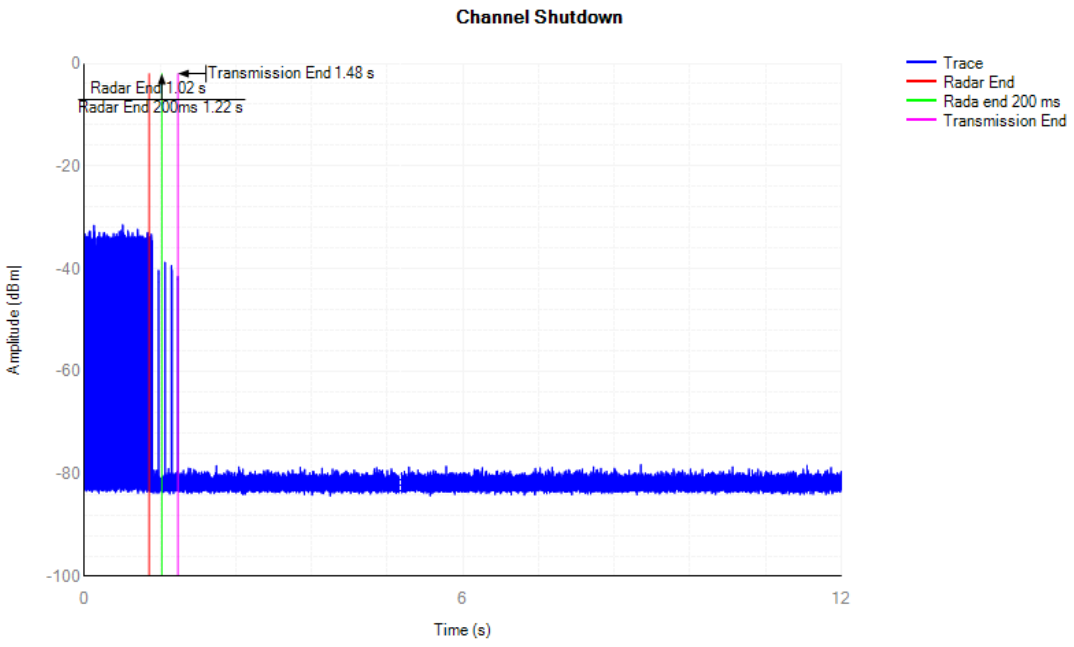


| Test Items | Value | Limit |
|---|---|---|
| Channel Closing Transmission Time | 0.0276s | 260 ms |
| Channel Move Time | 0.4565s | 10 s |

**5320MHz**

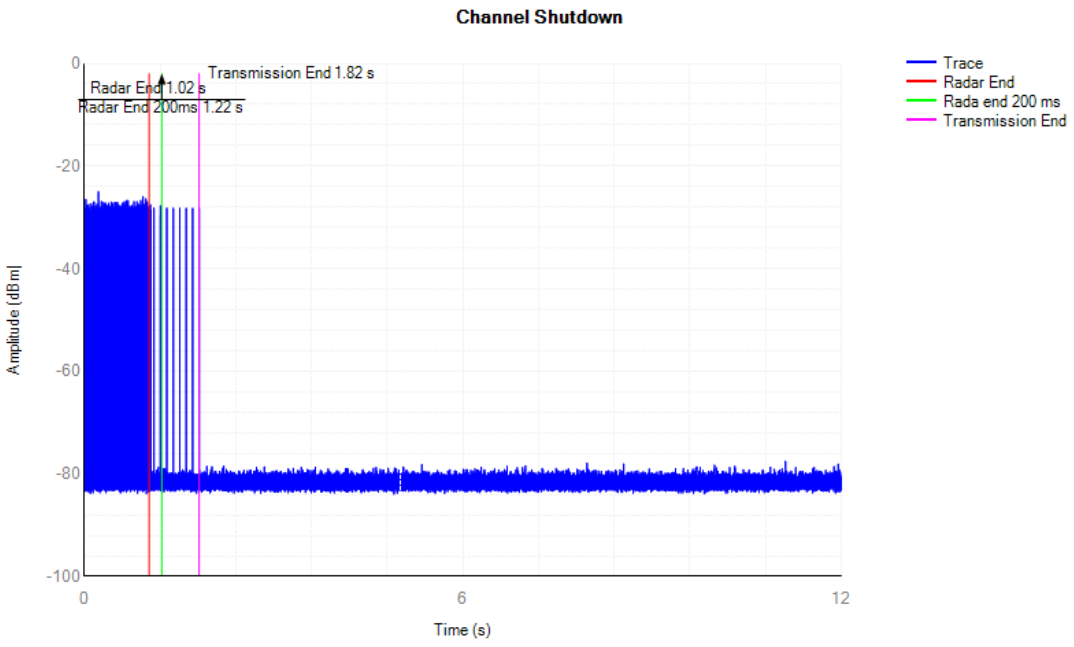


| Test Items | Value | Limit |
|---|---|---|
| Channel Closing Transmission Time | 0.0069s | 260 ms |
| Channel Move Time | 0.7922s | 10 s |

**5.6G**

**5610MHz**

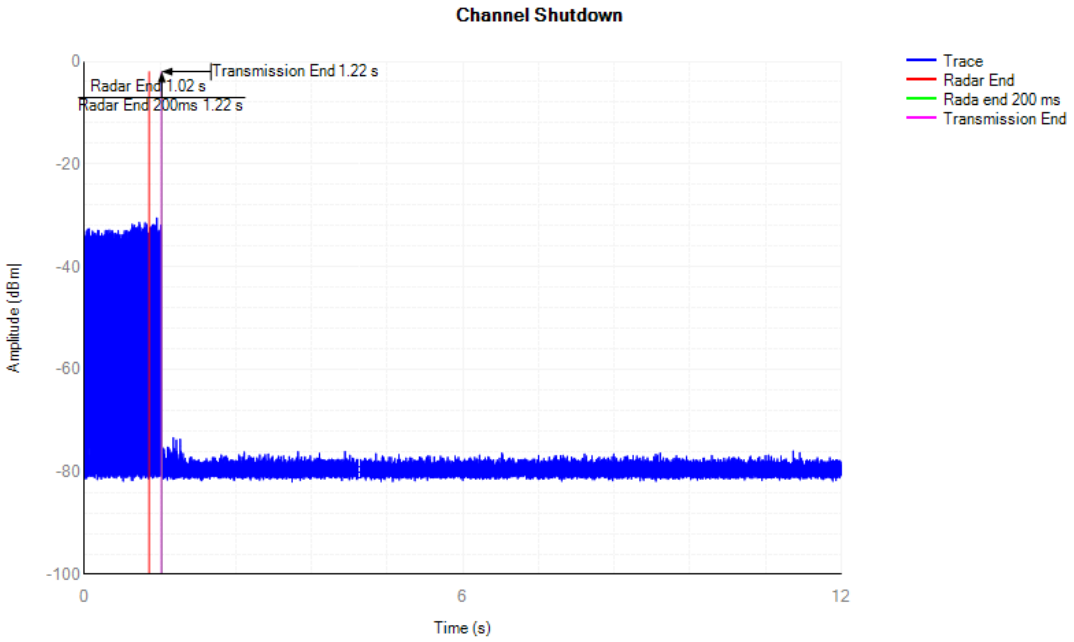


| Test Items | Value | Limit |
|---|---|---|
| Channel Closing Transmission Time | 0.1215s | 260 ms |
| Channel Move Time | 0.1958s | 10 s |

**5700MHz**

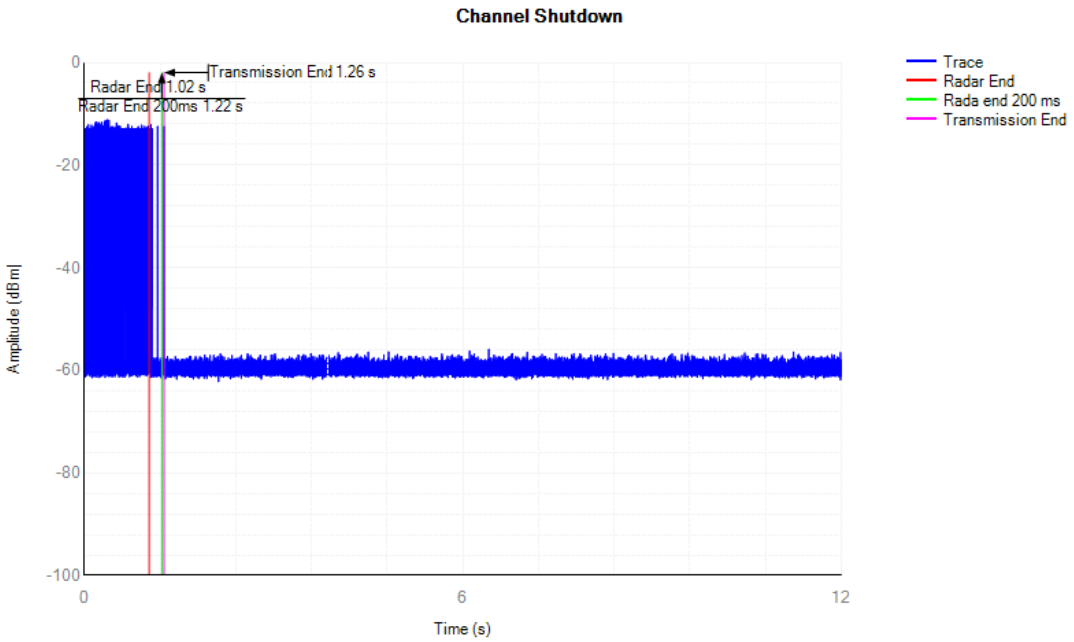


| Test Items | Value | Limit |
|---|---|---|
| Channel Closing Transmission Time | 0.0279s | 260 ms |
| Channel Move Time | 0.2369s | 10 s |

# 8 Test Setup Photo

Please refer to the Wi-Fi Test Setup Photos.

------ End of report ------