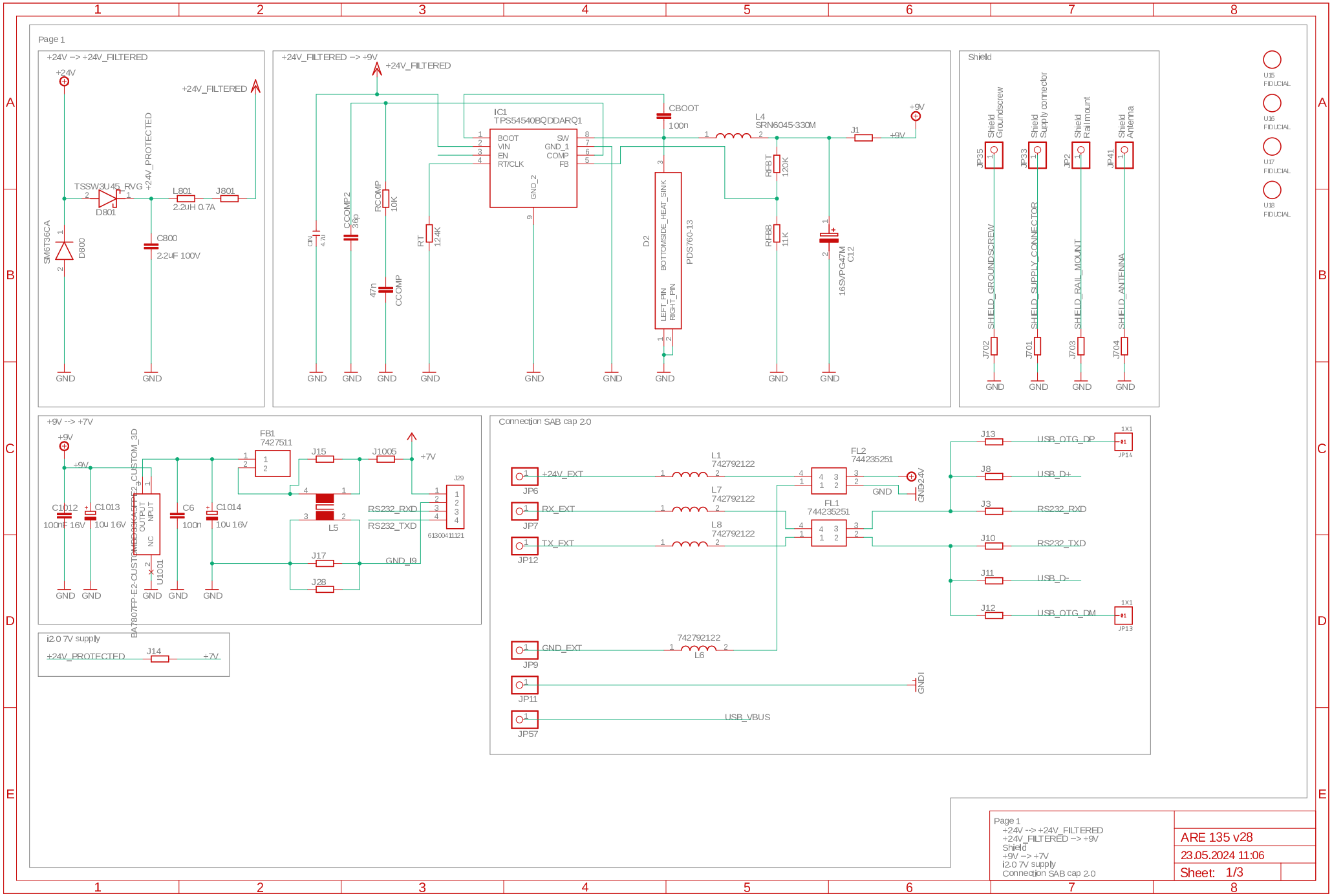

Page 1
+24V --> +24V_FILTERED
+24V_FILTERED --> +9V
Shield
+9V --> +7V
i2.0 7V supply
Connection SAB cap 2.0

ARE 135 v28
23.05.2024 11:06
Sheet: 1/3

Page 2

LED

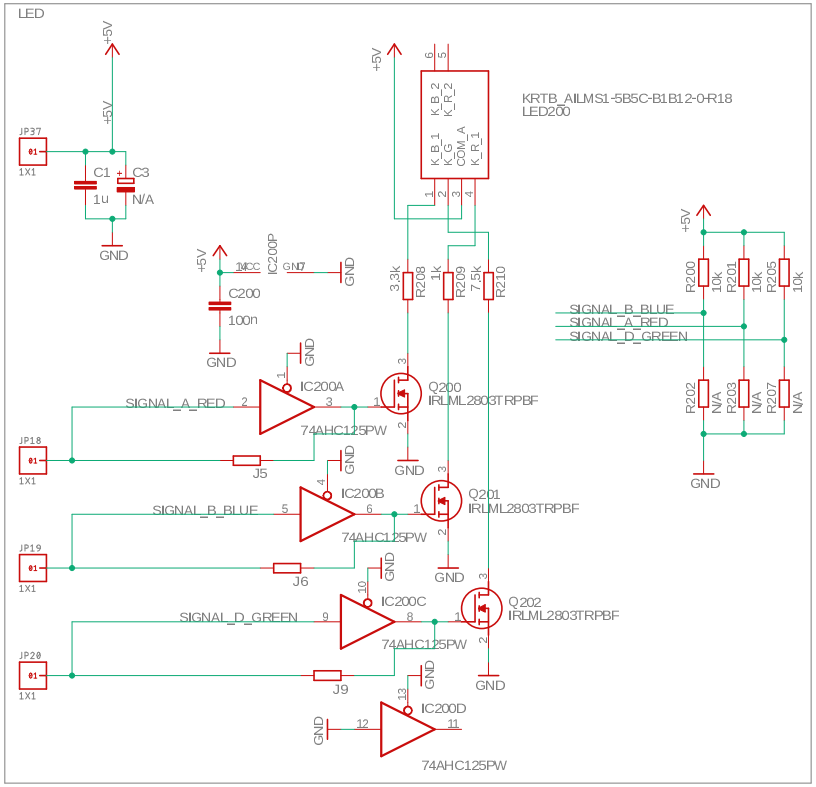

Trigger input

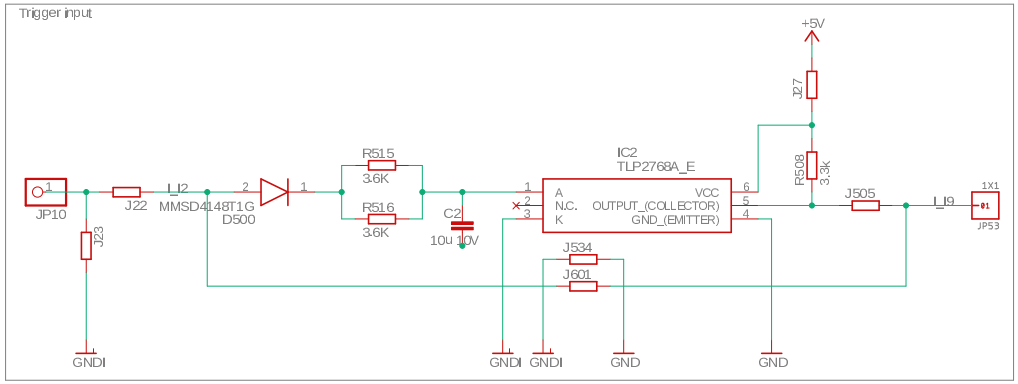

Good read output

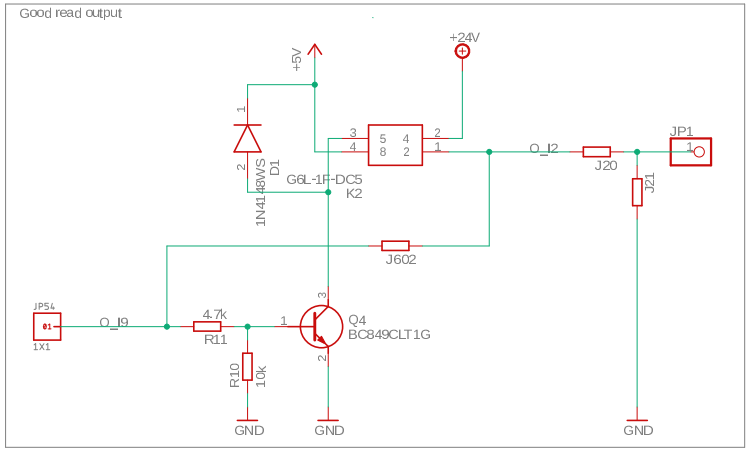

Single wire communication

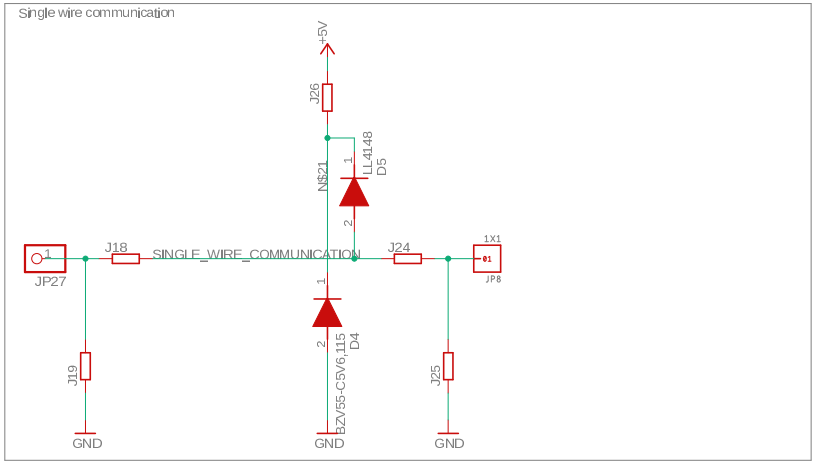

Post

Page 2
LED
Trigger input
Good read output
Single wire communication
Post

23.05.2024 11:06

Sheet: 2/3

Page 3

USB

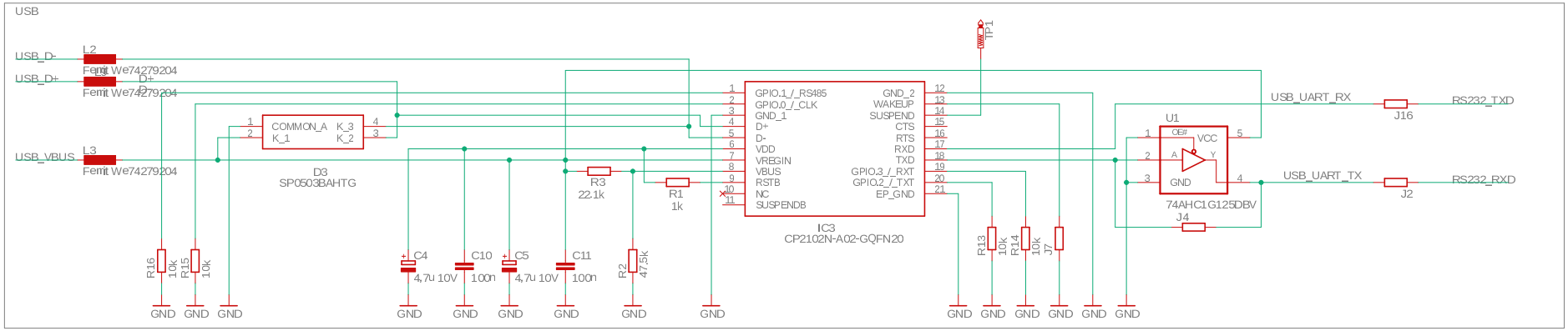

Page 3 USB	
	23.05.2024 11:06
	Sheet: 3/3