nova

Whole Home Mesh Wi-Fi 6 System

Quick Installation Guide

MX12

Video and More Info

The product name and model are shown on the label at the bottom of the device.
For more details, scan the QR code or visit **www.tendacn.com**, then search by the model.

Tenda

Decide Your Setup

Already use a router at home (Tenda WiFi+, Tenda Mesh Wi-Fi System)	I want to	Go to
No	Set up a new network	Set Up Internet
Yes	Expand an existing network	Expand Network

MX12 is used for illustration here unless otherwise specified. The actual product prevails.

Set Up Internet

1. Connect the cables: ❶→❷→❸→❹→❺ or ❷→❹→❺

*The router connected to modem or Ethernet jack acts as primary node. Other routers are added as secondary node.

❶ **Power off modem**
❷ **Connect router**
❸ **Power back**
❹ **Power on router**
❺ **Wait 1 min**

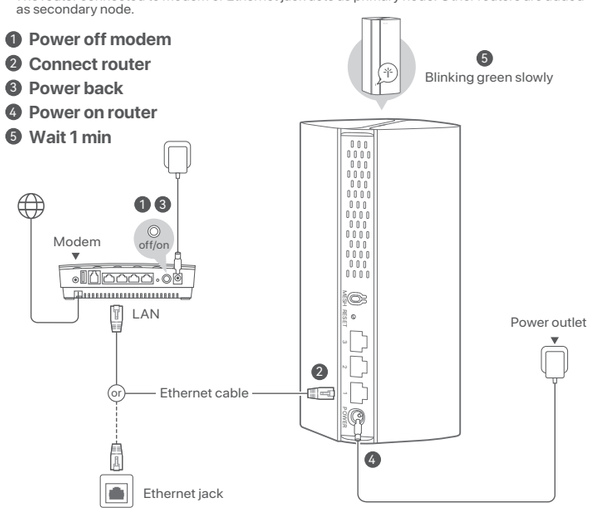

2. Connect to Wi-Fi on your Wi-Fi device.

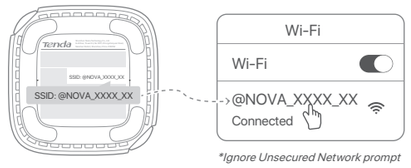

*Ignore Unsecured Network prompt

3. Follow the onscreen instructions.

❶ Tap **Start Now**.

❷ Configure internet settings.

DHCP: If detected, your internet is ready to use (for example, the modem is already connected to the internet).
Set the Wi-Fi name, Wi-Fi password and login password. Tap **Next**.

PPPoE: If detected, select the ISP type for your region, enter the PPPoE details and any required parameters.
Set the Wi-Fi name, Wi-Fi password and login password. Tap **Next**.

Forgot PPPoE details: Retrieve from your ISP.

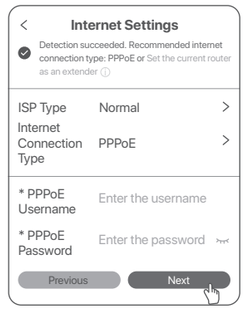

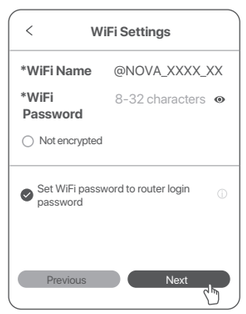

✓ The router is connected to the internet when its indicator turns solid green.

If you set up a network with a single router, the setup is complete.
If you set up a network with a 2/3-pack, add nodes as shown below, then relocate for best coverage.

Place each node as recommended in Q4 and repower it. After 90s, adjust until the indicator turns solid green.

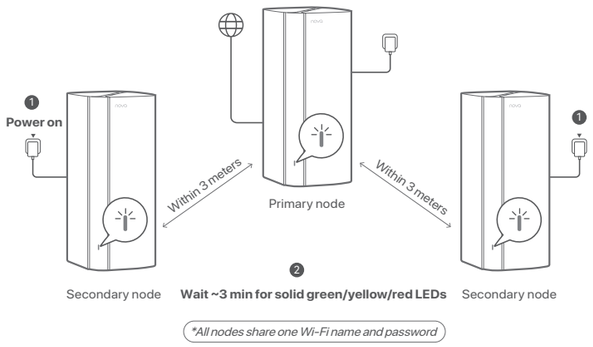

You can now access the internet with:

– Wireless devices: Connect your device to the router's Wi-Fi network.
– Wired devices: Use an Ethernet cable to connect your device to the router's LAN port (primary node: ports 2-3; secondary node: any port).

Expand Network

To expand your home network created by a **Tenda WiFi+** or **Tenda Mesh Wi-Fi System** router, follow the steps below. If you choose Option A or B, ensure each new node is at factory defaults before proceeding.

Tips
Up to 8 secondary nodes can be added. For optimal performance, no more than 3 secondary nodes are recommended.

Option A: Wireless Backhaul

1. Start networking.

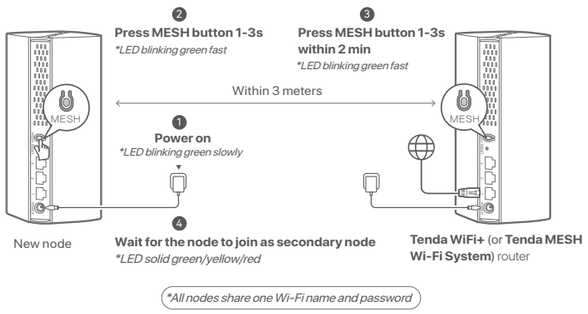

*Do not add multiple nodes at a time.

*Ensure the **Tenda WiFi+** or **Tenda Mesh Wi-Fi System** router is already online with MESH enabled.

*Only **Tenda WiFi+** or **Tenda Mesh Wi-Fi System** routers can be networked. If networking fails, reset the new node, then follow the steps in Option B. If the issue persists, contact Tenda's technical support.

2. Relocate new secondary nodes for best coverage.

*Place each node as recommended in Q4 and repower it. After 90s, adjust until the indicator turns solid green.

Option B: Wired Backhaul

❶ Power on the new router and wait for its indicator to blink green slowly.
❷ Use an Ethernet cable to connect the new router's LAN port (such as port 2) to the existing router's LAN port (such as port 2).

Once the new router's indicator turns solid green, the new router joins the network as secondary node and uses the same Wi-Fi name and password as the existing router.

Option C: Create Separate Network

❶ Do not connect the new router to the existing router with an Ethernet cable.
❷ Enter its web UI, and complete quick setup wizard (skip internet connection type detection and internet settings when prompted).
❸ Connect the new router's port 1 to the existing router's LAN port (such as port 2). Once the new router's indicator turns solid green, the network is created.

Router Overview

Indicator	After the router starts up, check status by: • **Solid green**: Connected to the internet, or networking succeeds with fair connection quality. • **Solid yellow**: Networking succeeds. Fair connection quality. • **Solid red**: Networking succeeds but with poor connection. • **Blinking green slowly**: Connecting to other nodes or waiting for connection. • **Blinking green fast**: Networking or performing WPS by MESH button. • **Blinking red slowly**: Failed to connect to the internet. • **Blinking yellow slowly**: No Ethernet cable is connected to the WAN port (default: 1). • **Blinking green fast 3s**: The Ethernet cable was plugged in or out.
MESH	Used to enable the WPS or Mesh function. Method: 1. Press the MESH button for 1-3 seconds. The indicator blinks green fast. 2. Within 2 minutes, enable WPS or MESH on your device to connect the router.
RESET	After startup, use a pin to hold the button for about 8 seconds until the indicator blinks red fast. Reset is successful when the indicator turns solid green and then blinks slowly. **Tips** – Primary node: A reset will disconnect the network and require setup again. – Secondary node: If it is from a 2/3 pack, it will rejoin the network after a reset. Otherwise, it becomes an independent node.
1	WAN port. Connect to the internet source such as a modem.
2 3	LAN port. Connect devices such as computers.

Share Wi-Fi with NFC

After you've joined the router's Wi-Fi and enabled NFC:

1. On your Tenda WiFi App, navigate to the NFC page.
2. Write Wi-Fi information to your NFC sticker as instructed.
3. Place the NFC sticker on the back of the device, typically near the camera.
4. Confirm connection when you get prompted.

*Only NFC-enabled **Android** or **HarmonyOS** devices can share Wi-Fi via NFC.
*Put the NFC sticker at visible locations to provide Wi-Fi access.
*NFC stickers can be rewritten if the Wi-Fi information changes.

Remotely Manage via Tenda WiFi App

Safety Precautions

Before operating, read and follow these precautions to prevent accidents.
– Do not use the device in a place where wireless devices are not allowed.
– The mains plug is used as the disconnect device, and shall remain readily operable.
– The power socket shall be installed near the device and easily accessible.
– Use the included power adapter. Do not use if its plug or cord is damaged.
– Operating environment: Temperature: 0°C - 40°C (32°F - 104°F); Humidity: (10% - 90%) RH, non-condensing; Storage environment: Temperature: -40°C - 70°C(-40°F - 158°F); Humidity: (5% - 90%) RH, non-condensing.
– Keep the device away from water, fire, high electric field, high magnetic field, and inflammable and explosive items.
– Keep this device out of reach of children to prevent children from using it as a toy and causing personal injury.
– Disassembling or modifying the device or its accessories without authorization voids the warranty, and might cause safety hazards.
– If such phenomena as smoke, abnormal sound, or smell appear when you use the device, immediately stop using it and disconnect its power supply, unplug all connected cables, and contact the after-sales service personnel.
– Refer all servicing to qualified service personnel.
– Disconnect the power source during servicing.
– Scan the QR code on this guide's cover to view Symbols on Products and Materials.
For the latest safety precautions, see **Safety and Regulatory Information** on **www.tendacn.com**.

	AT	BE	BG	CH	CY	CZ	DE	DK	EE	EL	ES	FI	FR	HR	HU	IE	
	IS	IT	LI	LT	LU	LV	MT	NL	NO	PL	PT	RO	SE	SI	SK	UK(NI)	

	UK

English-Attention: In EU member states, EFTA countries, Northern Ireland and Great Britain, the operation in the frequency range 5150MHz-5350MHz is only permitted indoors.
Deutsch-Achtung: In den EU-Mitgliedsstaaten, den EFTA-Ländern, Nordirland und Großbritannien ist der Betrieb im Frequenzbereich 5150MHz-5350MHz nur in Innenräumen erlaubt.
Italiano-Attenzione: Negli Stati membri dell'UE, nei Paesi EFTA, nell'Irlanda del Nord e in Gran Bretagna, il funzionamento nella gamma di frequenze 5150MHz-5350MHz è consentito solo in ambienti chiusi.
Español-Atención: En los estados miembros de la UE, los países de la AELC, Irlanda del Norte y Gran Bretaña, el rango de frecuencia operativa de 5150MHz-5350MHz solo está permitido en interiores.
Português-Atenção: Nos estados membros da UE, países da EFTA, Irlanda do Norte e Grã-Bretanha, o funcionamento na gama de frequências 5150MHz-5350MHz só é permitido no interior.
Français-Attention: Dans les États membres de l'UE, les pays de l'AELE, l'Irlande du Nord et la Grande-Bretagne, l'utilisation dans la gamme de fréquences 5150MHz-5350MHz n'est autorisée qu'en intérieur.
Nederlands-Aandacht: In de EU-lidstaten, de EVA-landen, Noord-Ierland en Groot-Brittannië is gebruik in het 5150MHz-5350MHz frequentiebereik alleen binnenshuis toegestaan.
Svenska-Uppmärksamhet: I EU medlemsstater, EFTA - länderna, Nordirland och Storbritannien är det endast tillåtet att använda frekvensområdet 5150MHz-5350MHz inomhus.
Dansk-Bemærk: I EU-medlemslandene, EFTA-landene, Nordirland og Storbritannien er drift i frekvensområdet 5150MHz-5350MHz kun tilladt indendørs.
Suomi-Huom: Eu-maissa, EFTA-maissa sekä Isossa-Britanniassa ja Pohjois-Irlannissa taajuusaluetta 5150MHz-5350MHz on sallittua käyttää ainoastaan sisätiloissa.
Magyar-Figyelem: Az EU-tagállamokban, az EFTA-országokban, Észak-Írországban és Nagy-Britanniában az 5150MHz-5350MHz -es frekvenciatartományban való működtetés csak beltérben engedélyezett.
Polski-Uwaga: W państwach członkowskich UE, krajach Europejskiego Stowarzyszenia Wolnego Handlu (EFTA), Irlandii Północnej i Wielkiej Brytanii praca w zakresie częstotliwości 5150MHz-5350MHz jest dozwolona tylko w pomieszczeniach.
Čeština-Pozor: V členských státech EU, zemích ESVO, Severním Irsku a Velké Británii je provoz ve frekvenčním rozsahu 5150MHz-5350MHz povolen pouze v interiéru.
Ελληνικά-Προσοχή: Στα κράτη μέλη της ΕΕ, στις χώρες της ΕΖΕΣ, στη Βόρεια Ιρλανδία και στη Μεγάλη Βρετανία, η λειτουργία στην περιοχή συχνοτήτων 5150MHz-5350MHz επιτρέπεται μόνο σε εσωτερικούς χώρους.
Română-Atenție: În statele membre UE, țările EFTA, Irlanda de Nord și Marea Britanie, operarea în intervalul de frecvență 5150MHz-5350MHz este permisă numai în interior.
Български-Внимание: В страните-членки на ЕС, страните от ЕАСТ, Северна Ирландия и Великобритания, работата в честотния диапазон 5150MHz-5350MHz е разрешена само на закрито.
Eesti-Tähelepanu: EL-o liikmesriikides, EFTA riikides, Põhja-Iirimaal ja Suurbritannias on sagedusvahemikus 5150MHz-5350MHz kasutamine lubatud ainult siseruumides.
Slovenščina-Pozor: V državah članicah EU, državah EFTA, Severni Irski in Veliki Britaniji je delovanje v frekvenčnem območju 5150MHz-5350MHz dovoljeno samo v zaprtih prostorih.
Slovenčina-Pozor: V členských štátoch EÚ, krajinách EFTA, Severnom Írsku a Veľkej Británii je prevádzka vo frekvenčnom pásme 5150MHz-5350MHz povolená len v interiéri.
Hrvatski-Pozornost: U državama članicama EU, zemljama EFTA-e, Sjevernoj Irskoj i Velikoj Britaniji, rad u frekvencijskom rasponu od 5150MHz-5350MHz dopušten je samo u zatvorenom prostoru.
Latviešu-Uzmanību: ES valstīs, EBTA valstīs, Ziemeļīrijā un Lielbritānijā, operēšana iekštelpās ir atļauta tikai 5150MHz-5350MHz diapazonā.
Lietuvių-Dėmesio: ES valstybėse narėse, ELPA šalyse, Šiaurės Airijoje ir Didžiojoje Britanijoje 5150MHz-5350MHz in dažnių diapazone leidžiama veikti tik patalpose.
Íslenska-Athugið: Í aðildarríkjum ESB, EFTA-löndum, Norður-Írlandi og Bretlandi er rekstur á tíðnisviðinu 5150MHz-5350MHz aðeins leyfður innandyra.
Norsk-OBS: I EUs medlemsland, EFTA-land, Nord-Irland og Storbritannia er drift i frekvensområdet 5150MHz-5350MHz kun tillatt innendørs.

FAQ

Q1: Unable to access the router's web UI (tendawifi.com)
First, try to visit **http://tendawifi.com** or **http://192.168.0.1** in the address bar.
If you are using a wireless device, such as a smartphone:
- Ensure that your smartphone is connected to the Wi-Fi network of the router.
  – For the first login, connect the Wi-Fi name (@NOVA_XXXX_XX) on the product label.
  – After setup, log in with the new Wi-Fi name and password.
- Ensure that the cellular network (mobile data) of the smartphone is disabled.

If you are using a wired device, such as a computer:
- Ensure that your computer is properly connected to the router's LAN port (primary node: ports 2-3; secondary node: any port).
- Ensure that your computer is configured to obtain an IP address and DNS server address automatically.

If the problem persists, reset the router and try again.

Q2: Unable to access internet after the configuration
Start with these solutions:
- Ensure that the router's WAN port "1" is properly connected to a modem or Ethernet jack.
- Log in to **tendawifi.com** and solve the problem as instructed on the **Internet Settings** page.
- When replacing an old router, clone its WAN MAC address to the new router.

If the problem persists, try the next steps:
- Wireless:
  – Ensure that your device is connected to the Wi-Fi network of the router.
  – Log in to the web UI and change your Wi-Fi information on the **WiFi Settings** page. Then try again.
- Wired:
  – Ensure that your device is properly connected to the router's LAN port (primary node: ports 2-3; secondary node: any port).
  – Ensure that your device is configured to obtain an IP address and DNS server address automatically.

Q3: Unable to search the router's Wi-Fi after the router is connected to the upstream router
1. Make sure the router is powered using the included power adapter.
2. Disconnect the Ethernet cable from the upstream router, then restore this router to factory settings.
3. Access the router's web UI via a browser to complete the setup wizard (skip internet connection type detection and internet settings when prompted).
4. Reconnect the router's port 1 to a LAN port of the upstream router.

Q4: How to relocate each secondary node for best results
1. Keep nodes within 10 meters of each other, with at most one wall in between.
2. Keep away from electronics such as microwave ovens and refrigerators.
3. Position in a high, open area.

Q5: Unable to search the router's Wi-Fi on some computers
- Change the network mode of the router's 2.4G Wi-Fi and 5G Wi-Fi to not include 802.11ax, and search again.
- If the router's Wi-Fi can be searched after changing the network mode, the wireless network adapter version is older and needs to be updated. You can go to the corresponding official website of the wireless network adapter to download and install, or you can use software such as driver wizard to detect and update online.
- If only 2.4G Wi-Fi is searched, first check whether the computer supports 5G band. If other 5G Wi-Fi can be searched, change the 5G Wi-Fi channel of the router to channel 36 or channel 149 in turn, and then search. If it can be searched after changing the channel, it means that the 5G wireless network adapter only supports high-channel or low-channel Wi-Fi.

IC RSS Warning

This device contains licence-exempt transmitter(s)/receiver(s) that comply with Innovation, Science and Economic Development Canada's licence-exempt RSS(s). Operation is subject to the following two conditions:
(1) This device may not cause interference.
(2) This device must accept any interference, including interference that may cause undesired operation of the device.
L'émetteur/récepteur exempt de licence contenu dans le present appareil est conforme aux CNR d'Innovation, Sciences et Développement économique Canada applicables aux appareils radio exempts de licence. L'exploitation est autorisée aux deux conditions suivantes:
(1) L'appareil ne doit pas produire de brouillage;
(2) L'appareil doit accepter tout brouillage radioélectrique subi, même si le brouillage est susceptible d'en compromettre le fonctionnement.
Any changes or modifications not expressly approved by the party responsible for compliance could void the user's authority to operate the equipment.
Tous les changements ou modifications non expressément approuvée par le responsible de la conformité pourrait vider l'utilisateur est habilité à exploiter l'équipemen.

ISEDC Radiation Exposure Statement:
This equipment complies with ISEDC RF radiation exposure limits set forth for an uncontrolled environment.
This transmitter must not be co-located or operating in conjunction with any other antenna or transmitter.
This equipment should be installed and operated with minimum distance 20cm between the radiator& your body.
Cet appareil est conforme aux limitesd'exposition de rayonnement RF ISEDC établiespour un environnement non contrôlé. Cetémetteur ne doit pas être co-implanté oufonctionner en onjunction avec toute autreantenne ou transmetteur. La distance entre le radiateur et le corps doit être d'au moins 20 cm lors de l'installation et du fonctionnement de l'appareil.
The device for operation in the band 5150–5250 MHz is only for indoor use to reduce the potential for harmful interference to co-channel mobile satellite systems.
le dispositif utilisé dans la bande 5150-5250 MHz est réservé à une utilisation en intérieur afin de réduire le risque de brouillage préjudiciable aux systèmes mobiles par satellite dans le même canal.

LA OPERACIóN DE ESTE DISPOSITIVO ESTA SUJETA A LAS SIGUIENTES CONDICIONES:
a) Es posible que este equipo o dispositivo no cause interferencia perjudicial.
b) Este equipo o dispositivo debe aceptar cualquier tipo de interferencia, incluyendo la que pueda causar su operación no deseada.
Estimado usuario: Antes de utilizar este producto lo invitamos a leer el siguiente manual para que conozca todas sus funciones y caracteristicas.

Producto	NOMBRE DEL PRODUCTO: Sistema Wi-Fi 6 Mesh para toda la casa AX3000 MODELO: MX12	
Alimentador de Energía: Alimentación: 100V - 240V ca 50Hz/60Hz Salida: 12V cc 1.5A/12V cc 2A		NOM
PAIS DE ORIGEN: CHINA		

CE Mark Warning

This is a Class B product.
In a domestic environment, this product may cause radio interference, in which case the user may be required to take adequate measures.
This equipment should be installed and operated with a minimum distance 20cm between the device and your body.
NOTE: (1) The manufacturer is not responsible for any radio or TV interference caused by unauthorized modifications to this equipment. (2) To avoid unnecessary radiation interference, it is recommended to use a shielded RJ45 cable.

Declaration of Conformity

Hereby, SHENZHEN TENDA TECHNOLOGY CO., LTD. declares that the device (router) is in compliance with Directive 2014/53/EU. The full text of the EU Declaration of Conformity is available at the following internet address: https://www.tendacn.com/download/list-9.html

English: Operating Frequency/Max Output Power **Polski:** Częstotliwość pracy / Maksymalna moc wyjściowa **Deutsch:** Betriebsfrequenz/Max. Ausgangsleistung **Русский:** Рабочая частота/макс. выходная мощность **Français:** Fréquence de fonctionnement/Puissance de sortie maximale **Nederlands:** Bedrijfsfrequentie/Maximaal uitgangsvermogen **Čeština:** Provozní frekvence/maximální výstupní výkon **Română:** Frecvența de funcționare/Puterea maximă de ieșire **Português:** Frequência de Funcionamento/Potência Máxima de Saída **Svenska:** Driftsfrekvens / Max Uteffekt **Slovenčina:** Prevádzková frekvencia/maximálny výstupný výkon **Ελληνικά:** Συχνότητα Λειτουργίας/Μέγιστη Ισχύς Εξόδου **Magyar:** Működési frekvencia/Maximális kimeneti teljesítmény **Italiano:** Frequenza operativa/Potenza di uscita massima **Български:** Работна честота/максимална изходна мощност **Español:** Frecuencia operativa/Potencia de salida máxima **Eesti:** Töösagedus/Max väljundvõimsus **Dansk:** Driftsfrekvens/Maks. Udgangseffekt **Suomi:** Toimintataajuus/maksimilähtöteho **Hrvatski:** Radna frekvencija/Maksimalna izlazna snaga **Latviešu:** Operējošās frekvences/Maksimālā jauda **Lietuvių:** Darbinis dažnis /maksimali išėjimo galia **Slovenščina:** Delovna frekvenca/Največja izhodna moč **Türkçe:** Çalışma Frekansı/Maks. Çıkış Gücü **عربي:** تردد التشغيل / الحد الأقصى لطاقة الإخراج	2412MHz-2472MHz/20dBm 5150MHz-5350MHz (indoor use only)/23dBm

FCC Statement

This equipment has been tested and found to comply with the limits for a Class B digital device, pursuant to Part 15 of the FCC Rules. These limits are designed to provide reasonable protection against harmful interference in a residential installation. This equipment generates, uses and can radiate radio frequency energy and, if not installed and used in accordance with the instructions, may cause harmful interference to radio communications. However, there is no guarantee that interference will not occur in a particular installation. If this equipment does cause harmful interference to radio or television reception, which can be determined by turning the equipment off and on, the user is encouraged to try to correct the interference by one or more of the following measures:
— Reorient or relocate the receiving antenna.
— Increase the separation between the equipment and receiver.
— Connect the equipment into an outlet on a circuit different from that to which the receiver is connected.
— Consult the dealer or an experienced radio/TV technician for help.
Operation is subject to the following two conditions: (1) this device may not cause harmful interference, and (2) this device must accept any interference received, including interference that may cause undesired operation.

Radiation Exposure Statement

This device complies with FCC radiation exposure limits set forth for an uncontrolled environment and it also complies with Part 15 of the FCC RF Rules. This transmitter must not be co-located or operating in conjunction with any other antenna or transmitter.
This equipment should be installed and operated with minimum distance 20cm between the device and your body.

Caution:

Any changes or modifications not expressly approved by the party responsible for compliance could void the user's authority to operate this equipment.
Operating frequency: 2412–2462 MHz, 5150–5350 MHz, 5725–5850 MHz
This device is for indoor use only.
NOTE: (1) The manufacturer is not responsible for any radio or TV interference caused by unauthorized modifications to this equipment. (2) To avoid unnecessary radiation interference, it is recommended to use a shielded RJ45 cable.

RECYCLING

This product bears the selective sorting symbol for Waste Electrical and Electronic Equipment (WEEE). This means that this product must be handled pursuant to European directive 2012/19/EU in order to be recycled or dismantled to minimize its impact on the environment.
User has the choice to give his product to a competent recycling organization or to the retailer when he buys a new electrical or electronic equipment.

Technical Support

Shenzhen Tenda Technology Co., Ltd.
Floor 6-8, Tower E3, No.1001, Zhongshanyuan Road, Nanshan District, Shenzhen, China. 518052
Website: www.tendacn.com
E-mail: support@tenda.cn
support.au@tenda.cn (Australia)
support.uk@tenda.cn (United Kingdom)
support.usa@tenda.cn (North America)

Copyright © 2025 Shenzhen Tenda Technology Co., Ltd. All rights reserved.
Tenda is a registered trademark legally held by Shenzhen Tenda Technology Co., Ltd. Other brand and product names mentioned herein are trademarks or registered trademarks of their respective holders. Specifications are subject to change without notice.

V1.0 Keep for future reference.