Tenda

Quick Installation Guide

Indoor/Outdoor Wi-Fi Access Point
OAP1200&OAP3000

Get Support and Services

Scan the QR code for technical specifications, user guides, Symbols on Products and Materials and more information.
You can see the product name and model on the back of the AP.

https://www.tendacn.com/service/default.html

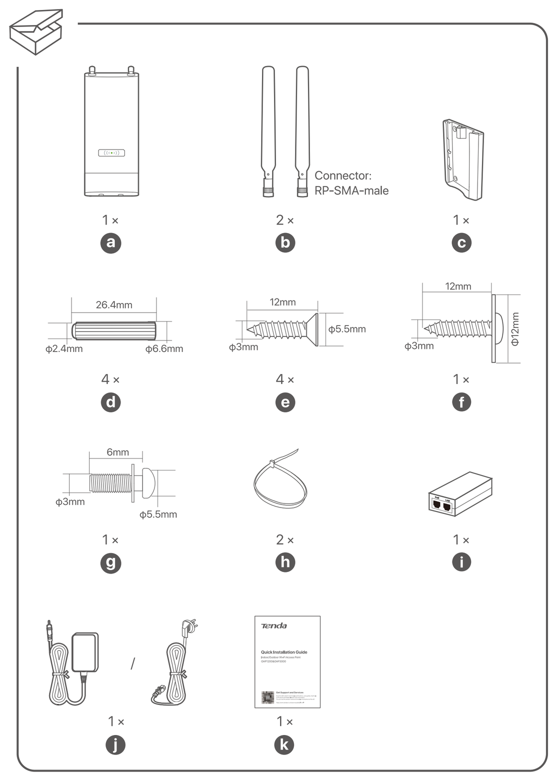

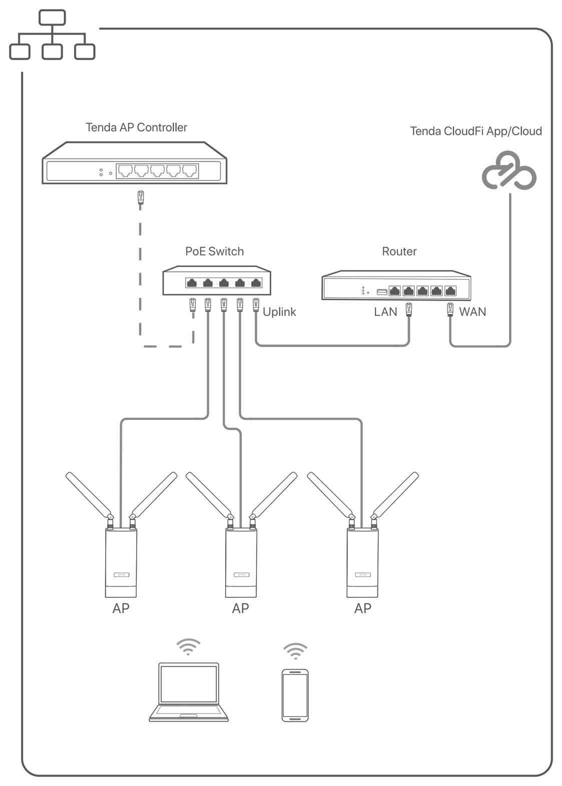

1

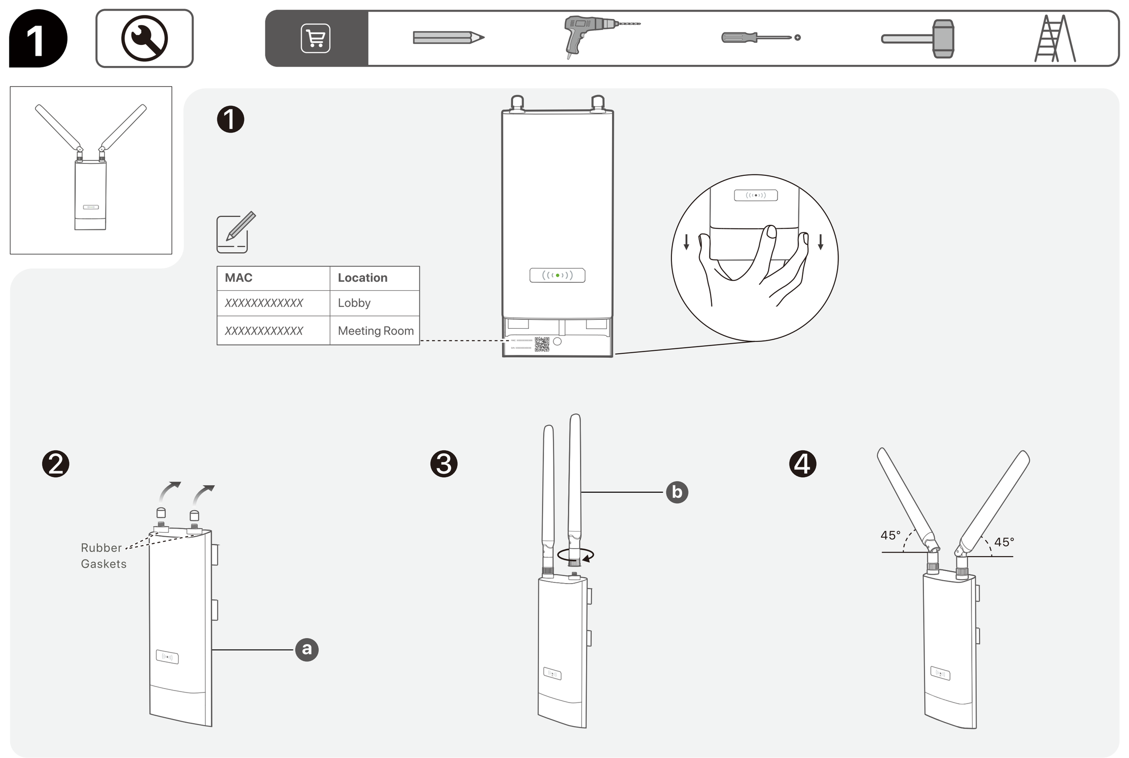

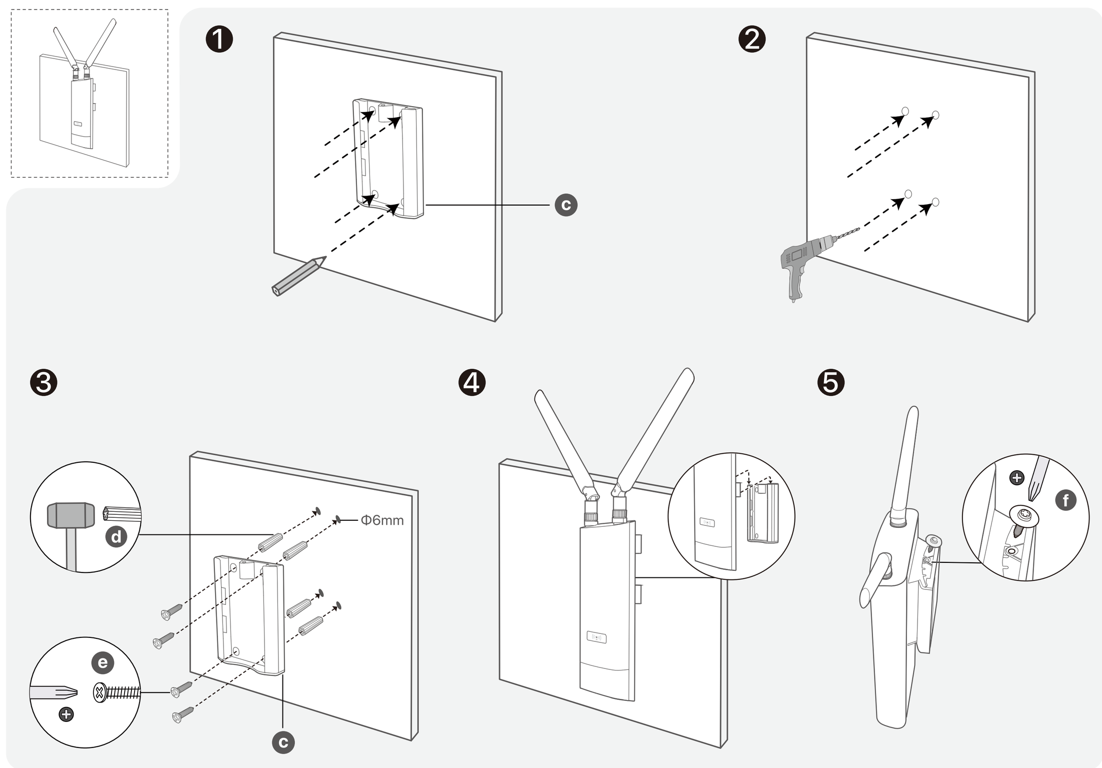

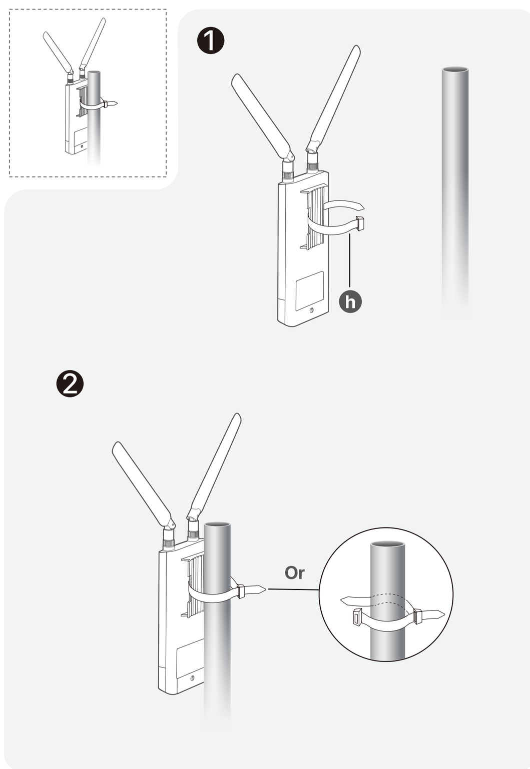

2 Lightning and ESD Protection

Connect the **GND** terminal of the AP to a grounding terminal connected to the earth or building to protect the AP from overvoltage and overcurrent caused by lightning and ESD.

1. Connect one side of a grounding cord to the GND terminal of the AP using the grounding screw.
2. Remove the ground wire notch of the port cover and pass the ground wire, then place back the port cover.
3. Connect the other side of the grounding cord to the grounding terminal connected to the earth or building.

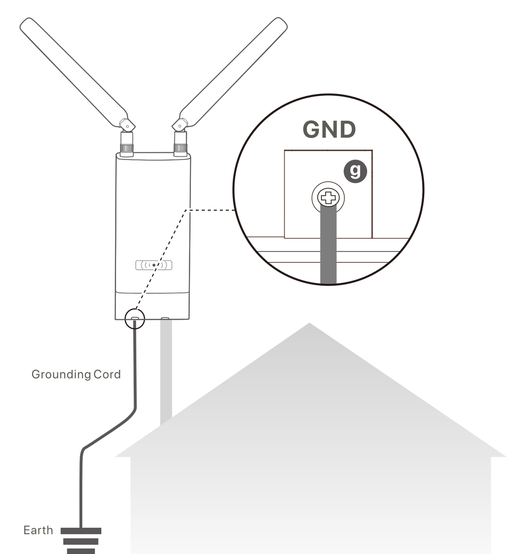

3

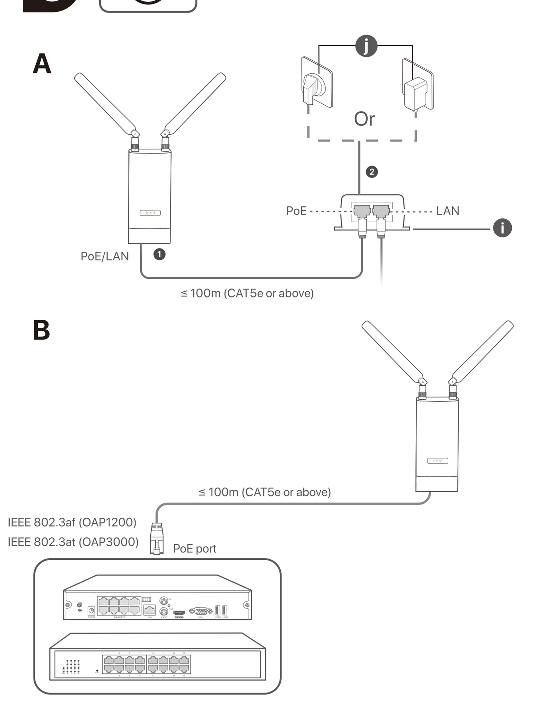

4

Tips:
- Ensure that the internet where the AP is deployed is connected.
- If the AP is managed by the AP controller or router, log in to the web UI of the controller or router to view the Wi-Fi name and password of the AP. If the AP is not managed by any network device, the Wi-Fi only has a default Wi-Fi name **Tenda_*XXXXXX*** (***XXXXXX*** is the last six digits of the MAC address on the AP label after removing the front cover).

Use Tenda CloudFi cloud

Before managing the AP on the cloud, add the AP to the Tenda CloudFi App or Tenda CloudFi Cloud (**https://cloudfi.tendacn.com**) first. For more details, see help document in **Help Center** of Tenda CloudFi App or Tenda CloudFi Cloud.

Method 1: Add the AP over Wi-Fi

1. Get the **Tenda CloudFi** from **Google Play**, **App Store** or QR code.

2. Connect your mobile device to the Wi-Fi of the AP.
3. Open the App, and tap an existing project or create a new one.
4. Tap the pop-up window that shows the AP is detected, and add it to the project. If the pop-up window does not appear, tap ⊕ and follow the on-screen instructions.

Method 2: Add the AP with Unique Cloud Code

1. Get the **Unique Cloud Code** from Tenda CloudFi App or Tenda CloudFi Cloud.
2. Refer to **Use Web Browser** to log in to the web UI of the AP, enable Cloud Maintenance and paste the **Unique Cloud Code**.
3. Add the AP to the project through **Device-joining Alert** on Tenda CloudFi App or Tenda CloudFi Cloud.

Use Tenda Hardware Controller

Tenda hardware controller is a Tenda AP controller or Tenda router with AP management function. If there is a Tenda hardware controller in the LAN, you can manage the APs in batches using the hardware controller. For details, get the user guide of the hardware controller of the model on **www.tendacn.com**.

Use Web Browser

1. Connect your Wi-Fi enabled device to the Wi-Fi of the AP.

Note
If **Unsecured Network** prompts on the page, ignore it.

2. Start a web browser and enter **http://tendawifi.com** in the address bar.
3. Follow the on-screen instructions for initial login.

Note
For initial setup or after a reset, set the new login password and Wi-Fi password to ensure privacy and security. The longer the password, the higher the security.
- Login password: 8-32 characters.
- Wi-Fi password: 8-63 characters.

Indicator/Port/Button

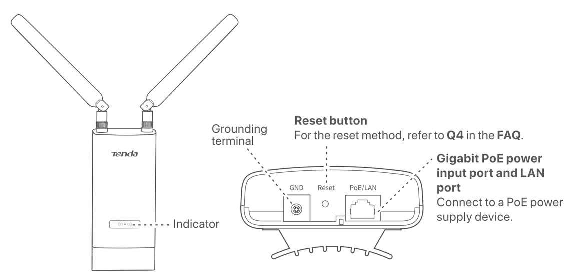

Indicator status	Description
Blinking white (OAP1200)	The AP is starting up.
Solid white (OAP3000)	
Solid white (OAP1200)	The AP is waiting to be managed by a controller (such as Tenda CloudFi App or Tenda CloudFi Cloud, an AP controller (AC), or a router with AP management function).
Blinking white (OAP3000)	
Solid blue	The AP is managed by a controller and is working properly.
Fast blinking blue	The AP **Locate** feature was activated in the Tenda CloudFi App or Tenda CloudFi Cloud.
Slowly blinking blue	The Wi-Fi of the AP is disabled.
Alternating white/blue	The AP is busy (for example, upgrading firmware). Do not cut off the power.

FAQ

Q1: I cannot log in to the web UI of the AP by visiting http://tendawifi.com. What should I do?
A1:
- Ensure that the AP is working properly and the Wi-Fi enabled device is connected to the correct Wi-Fi.
- Try to use the IP address to log in to the web UI of the AP.
  - Log in with **10.16.16.169**: Set the IP address (10.16.16. *X*, *X* ranges from 1 to 254 and is unused) of the Wi-Fi-enabled or wired devices to the IP address within the same network segment as the AP.
  - Log in with a new IP address: If the AP obtains an IP address from the DHCP server, you can first check the new IP address from the DHCP server, and then use it to log in. If not, use **192.168.0.254** to log in to the web UI of the AP.
- Clear the cache of your web browser or replace the web browser, and try login again.
- Refer to **Q4** to reset the AP.

Q2: The Tenda CloudFi App fails to add the AP to a project. What should I do?
A2:
- Ensure that the internet where the AP is deployed is connected.
- Ensure that the firmware of the AP is the latest version.
- Reboot the AP.
- Refer to **Q4** to reset the AP.

Q3: The controller fails to detect the AP. What should I do?
A3:
- Ensure that the physical connections are correct and the AP has started up properly.
- If VLAN exists in the network, ensure that the controller is in the same VLAN as the AP.
- Reboot the AP.
- Ensure that the firmware of the controller and the AP is the latest version on **www.tendacn.com**.
- Refer to **Q4** to reset the AP.

Q4: How to reset the AP?
A4: When the AP is idle, hold down the reset button (**Reset**) for about 8 seconds. Wait until the AP is reset successfully for about 1 minute.

Safety Precautions

Before operating, read and follow these precautions to prevent accidents.
- Device operating temperature: -30℃-50℃ (-22℉-122℉, OAP1200); -30℃-60℃ (-22℉-140℉, OAP3000). Power adapter operating temperature: 0℃-40℃ (32℉-104℉).
- The device can be used safely outdoors. The power adapter is for indoor safe use only.
- The AP is suitable for mounting at heights > 2m.
- Do not use the device in a place where wireless devices are not allowed.
- Use a power adapter or PoE power supply device with the required specifications. Do not use the power adapter or PoE power supply device if it is damaged.
- If the device adopts power adapter supply, the mains plug is used as the disconnect device, and shall remain readily operable. The power socket shall be installed near the device and easily accessible.
- Keep the device away from water, fire, high electric field, high magnetic field, and inflammable and explosive items.
- If such phenomena as smoke, abnormal sound or smell appear when you use the device, immediately stop using it and disconnect its power supply, unplug all connected cables, and contact the after-sales service personnel.
- Disassembling or modifying the device or its accessories without authorization voids the warranty, and might cause safety hazards.
- Refer all servicing to qualified service personnel.
- Disconnect the power source during servicing.

For the latest safety precautions, see **Safety and Regulatory Information** on **www.tendacn.com**.

CE Mark Warning

This is a Class A product.
Warning: Operation of this equipment in a residential environment could cause radio interference. In which case the user may be required to take adequate measures.
This equipment should be installed and operated with a minimum distance of 20 cm between the device and your body.
NOTE: (1) The manufacturer is not responsible for any radio or TV interference caused by unauthorized modifications to this equipment. (2) To avoid unnecessary radiation interference, it is recommended to use a shielded RJ45 cable.

Declaration of Conformity
Hereby, SHENZHEN TENDA TECHNOLOGY CO., LTD. declares that the device (Access Point) is in compliance with Directive 2014/53/EU.
The full text of the EU Declaration of Conformity is available at the following internet address:
https://www.tendacn.com/download/list-9.html

English: Operating Frequency/Max Output Power **Deutsch**: Betriebsfrequenz/Max. Ausgangsleistung **Italiano**: Frequenza operativa/Potenza di uscita massima **Español**: Frecuencia operativa/Potencia de salida máxima **Português**: Frequência de Funcionamento/Potência Máxima de Saída **Français**: Fréquence de fonctionnement/Puissance de sortie maximale **Nederlands**: Bedrijfsfrequentie/Maximaal uitgangsvermogen **Svenska**: Driftsfrekvens / Max Uteffekt **Dansk**: Driftsfrekvens/Maks. Udgangseffekt **Suomi**: Toimintataajuus/maksimilähtöteho **Magyar**: Működési frekvencia/Maximális kimeneti teljesítmény **Polski**: Częstotliwość pracy / Maksymalna moc wyjściowa **Čeština**: Provozní frekvence/maximální výstupní výkon **Ελληνικά**: Συχνότητα Λειτουργίας/Μέγιστη Ισχύς Εξόδου **Română**: Frecvența de funcționare/Puterea maximă de ieșire **Български**: Работна честота/максимална изходна мощност **Eesti**: Töösagedus/Max väljundvõimsus **Slovenščina**: Delovna frekvenca/Največja izhodna moč **Slovenčina**: Prevádzková frekvencia/maximálny výstupný výkon **Hrvatski**: Radna frekvencija/Maksimalna izlazna snaga **Latviešu**: Operējošās frekvences/ Maksimālā jauda **Lietuvių**: Darbinis dažnis / maksimali išėjimo galia **Türkçe**: Çalışma Frekansı/Maks. Çıkış Gücü **Русский**: Рабочая частота/макс. выходная мощность **عربي:** تردد التشغيل / الحد الأقصى لطاقة الإخراج	2412MHz-2472MHz/20dBm 5150MHz-5250MHz (indoor use only)/23dBm (OAP1200) 5150MHz-5350MHz (indoor use only)/23dBm (OAP3000)

⚠	AT	BE	BG	CH	CY	CZ	DE	DK	EE	EL	ES	FI	FR	HR	HU	IE
	IS	IT	LI	LT	LU	LV	MT	NL	NO	PL	PT	RO	SE	SI	SK	UK(NI)

⚠	UK

English-Attention: In EU member states, EFTA countries, Northern Ireland and Great Britain, the operation in the frequency range 5150MHz-5350MHz (OAP3000) and 5150MHz-5250MHz (OAP1200) is only permitted indoors.
Deutsch-Achtung: In den EU-Mitgliedsstaaten, den EFTA-Ländern, Nordirland und Großbritannien ist der Betrieb im Frequenzbereich 5150MHz-5350MHz (OAP3000) und 5150MHz-5250MHz (OAP1200) nur in Innenräumen erlaubt.
Italiano-Attenzione: Negli Stati membri dell'UE, nei Paesi EFTA, nell'Irlanda del Nord e in Gran Bretagna, il funzionamento nella gamma di frequenze 5150MHz-5350MHz (OAP3000) e 5150MHz-5250MHz (OAP1200) è consentito solo in ambienti chiusi.
Español-Atención: En los estados miembros de la UE, los países de la AELC, Irlanda del Norte y Gran Bretaña, el rango de frecuencia operativa de 5150MHz-5350MHz (OAP3000) y 5150MHz-5250MHz (OAP1200) solo está permitido en interiores.
Português-Atenção: Nos estados membros da UE, países da EFTA, Irlanda do Norte e Grã-Bretanha, o funcionamento na gama de frequências 5150MHz-5350MHz (OAP3000) e 5150MHz-5250MHz (OAP1200) só é permitido no interior.
Français-Attention: Dans les États membres de l'UE, les pays de l'AELE, l'Irlande du Nord et la Grande-Bretagne, l'utilisation dans la gamme de fréquences 5150MHz-5350MHz (OAP3000) et 5150MHz-5250MHz (OAP1200) n'est autorisée qu'en intérieur.
Nederlands-Aandacht: In de EU-lidstaten, de EVA-landen, Noord-Ierland en Groot-Brittannië is gebruik in het 5150MHz-5350MHz (OAP3000) en 5150MHz-5250MHz (OAP1200) frequentiebereik alleen binnenshuis toegestaan.
Svenska-Uppmärksamhet: I EU medlemsstater, EFTA - länderna, Nordirland och Storbritannien är det endast tillåtet att använda frekvensområdet 5150MHz-5350MHz (OAP3000) och 5150MHz-5250MHz (OAP1200) inomhus.
Dansk-Bemærk: I EU-medlemslandene, EFTA-landene, Nordirland og Storbritannien er drift i frekvensområdet 5150MHz-5350MHz (OAP3000)z og 5150MHz-5250MHz (OAP1200) kun tilladt indendørs.
Suomi-Huom: Eu-maissa, EFTA-maissa sekä Isossa-Britanniassa ja Pohjois-Irlannissa taajuusaluetta 5150MHz-5350MHz (OAP3000) ja 5150MHz-5250MHz (OAP1200) on sallittua käyttää ainoastaan sisätiloissa.
Magyar-Figyelem: Az EU-tagállamokban, az EFTA-országokban, Észak-Írországban és Nagy-Britanniában az 5150MHz-5350MHz (OAP3000) zés az 5150MHz-5250MHz (OAP1200)-es frekvenciatartományban való működtetés csak beltérben engedélyezett.
Polski-Uwaga: W państwach członkowskich UE, krajach Europejskiego Stowarzyszenia Wolnego Handlu (EFTA), Irlandii Północnej i Wielkiej Brytanii praca w zakresie częstotliwości 5150MHz-5350MHz (OAP3000) i 5150MHz-5250MHz (OAP1200) jest dozwolona tylko w pomieszczeniach.
Čeština-Pozor: V členských státech EU, zemích ESVO, Severním Irsku a Velké Británii je provoz ve frekvenčním rozsahu 5150MHz-5350MHz (OAP3000) a 5150MHz-5250MHz (OAP1200) povolen pouze v interiéru.
Ελληνικά-Προσοχή: Στα κράτη μέλη της ΕΕ, στις χώρες της ΕΖΕΣ, στη Βόρεια Ιρλανδία και στη Μεγάλη Βρετανία, η λειτουργία στην περιοχή συχνοτήτων 5150MHz-5350MHz (OAP3000) a 5150MHz-5250MHz (OAP1200) επιτρέπεται μόνο σε εσωτερικούς χώρους.
Română-Atenție: În statele membre UE, țările EFTA, Irlanda de Nord și Marea Britanie, operarea în intervalul de frecvență 5150MHz-5350MHz (OAP3000) și 5150MHz-5250MHz (OAP1200) este permisă numai în interior.
Български-Внимание: В страните-членки на ЕС, страните от ЕАСТ, Северна Ирландия и Великобритания, работата в честотния диапазон 5150MHz-5350MHz (OAP3000) и 5150MHz-5250MHz (OAP1200) е разрешена само на закрито.
Eesti-Tähelepanu: EL-o liikmesriikides, EFTA riikides, Põhja-Iirimaal ja Suurbritannias on sagedusvahemikus 5150MHz-5350MHz (OAP3000) ja 5150MHz-5250MHz (OAP1200) kasutamine lubatud ainult siseruumides.
Slovenščina-Pozor: V državah članicah EU, državah EFTA, Severni Irski in Veliki Britaniji je delovanje v frekvenčnem območju 5150MHz-5350MHz (OAP3000) in 5150MHz-5250MHz (OAP1200) dovoljeno samo v zaprtih prostorih.
Slovenčina-Pozor: V členských štátoch EÚ, krajinách EFTA, Severnom Írsku a Veľkej Británii je prevádzka vo frekvenčnom pásme 5150MHz-5350MHz (OAP3000) a 5150MHz-5250MHz (OAP1200) povolená len v interiéri.
Hrvatski-Pozornost: U državama članicama EU, zemljama EFTA-e, Sjevernoj Irskoj i Velikoj Britaniji, rad u frekvencijskom rasponu od 5150MHz-5350MHz (OAP3000) i 5150MHz-5250MHz (OAP1200) dopušten je samo u zatvorenom prostoru.
Latviešu-Uzmanību: ES valstīs, EBTA valstīs, Ziemeļīrijā un Lielbritānijā, operēšana iekštelpās ir atļauta tikai 5150MHz-5350MHz (OAP3000) ir 5150MHz-5250MHz (OAP1200) diapazonā.
Lietuvių-Dėmesio: ES valstybėse narėse, ELPA šalyse, Šiaurės Airijoje ir Didžiojoje Britanijoje 5150MHz-5350MHz (OAP3000) in 5150MHz-5250MHz (OAP1200) dažnių diapazone leidžiama veikti tik patalpose.
Íslenska-Athugið: Í aðildarríkjum ESB, EFTA-löndum, Norður-Írlandi og Bretlandi er rekstur á tíðnisviðinu 5150MHz-5350MHz (OAP3000) og 5150MHz-5250MHz (OAP1200) aðeins leyfður innandyra.
Norsk-OBS: I EUs medlemsland, EFTA-land, Nord-Irland og Storbritannia er drift i frekvensområdet 5150MHz-5350MHz (OAP3000) in 5150MHz-5250MHz (OAP1200) kun tillatt innendørs.

FCC Statement

This equipment has been tested and found to comply with the limits for a Class A digital device, pursuant to Part 15 of the FCC Rules. These limits are designed to provide reasonable protection against harmful interference when the equipment is operated in a commercial environment. This equipment generates, uses, and can radiate radio frequency energy and, if not installed and used in accordance with the instruction manual, may cause harmful interference to radio communications. Operation of this equipment in a residential area is likely to cause harmful interference in which case the user will be required to correct the interference at his own expense.

Operation is subject to the following two conditions: (1) this device may not cause harmful interference, and (2) this device must accept any interference received, including interference that may cause undesired operation.

Radiation Exposure Statement
This device complies with FCC radiation exposure limits set forth for an uncontrolled environment and it also complies with Part 15 of the FCC RF Rules.

This transmitter must not be co-located or operating in conjunction with any other antenna or transmitter.
This equipment should be installed and operated with a minimum distance of 20 cm between the device and your body.

Caution!
Any changes or modifications not expressly approved by the party responsible for compliance could void the user's authority to operate this equipment.

Operating frequency:
2412-2462MHz, 5180-5240MHz, 5745-5825MHz (OAP1200)
2412-2462MHz, 5180-5320MHz, 5745-5825MHz (OAP3000)

NOTE: (1) The manufacturer is not responsible for any radio or TV interference caused by unauthorized modifications to this equipment. (2) To avoid unnecessary radiation interference, it is recommended to use a shielded RJ45 cable.

RECYCLING

This product bears the selective sorting symbol for Waste Electrical and Electronic Equipment (WEEE). This means that this product must be handled pursuant to European directive 2012/19/EU in order to be recycled or dismantled to minimize its impact on the environment.
User has the choice to give his product to a competent recycling organization or to the retailer when he buys a new electrical or electronic equipment.

Technical Support
Shenzhen Tenda Technology Co., Ltd.
Floor 6-8, Tower E3, No.1001, Zhongshanyuan Road, Nanshan District, Shenzhen, China. 518052
Website: www.tendacn.com
E-mail: support@tenda.com.cn
support.uk@tenda.cn (United Kingdom)
support.usa@tenda.cn (North America)
support.mx@tenda.cn (Mexico)
support.au@tenda.cn (Australia)

Copyright ©2025 Shenzhen Tenda Technology Co., Ltd. All rights reserved.
Tenda is a registered trademark legally held by Shenzhen Tenda Technology Co., Ltd. Other brand and product names mentioned herein are trademarks or registered trademarks of their respective holders. Specifications are subject to change without notice.

V2.0 Keep for future reference.