Date: 2024-05-21

System Check_Head_13MHz

DUT: CLA-13 - SN1022

Communication System: CW; Frequency: 13.000 MHz
Medium: HSL_13_240521 Medium parameters used: f= 13.000 MHz; σ= 0.728 S/m; ε_r = 54.7
Ambient Temperature: 23.2°C; Liquid Temperature: 22.2°C

DASY6 Configuration:
- Probe: EX3DV4 - SN3931; ConvF(18.48, 18.48, 18.48); Calibrated: 2023-10-24
- Sensor-Surface: 1.4 mm
- Electronics: DAE4 Sn376; Calibrated: 2023-09-14
- Phantom: ELI V8.0 (20deg probe tilt); Serial: 2155; Section: Flat
- Measurement Software: 16.2.4.2524
- UID: CW, 0

Pin=30.0dBm/Area Scan (40.0 mm x 90.0 mm): Measurement Grid: 10.0 mm x 15.0 mm
SAR (1g) = 0.505 W/kg; SAR (10g) = 0.409 W/kg;

Pin=30.0dBm/Zoom Scan (30.0 mm x 30.0 mm x 30.0 mm): Measurement Grid: 6.0 mm x 6.0 mm x 1.5 mm
Power Drift = -0.00 dB
SAR (1g) = 0.505 W/kg; SAR (8g) = 0.315 W/kg; SAR (10g) = 0.316 W/kg
Smallest distance from peaks to all points 3 dB below = 17.4 mm
Ratio of SAR at M2 to SAR at M1 = 77.5 %

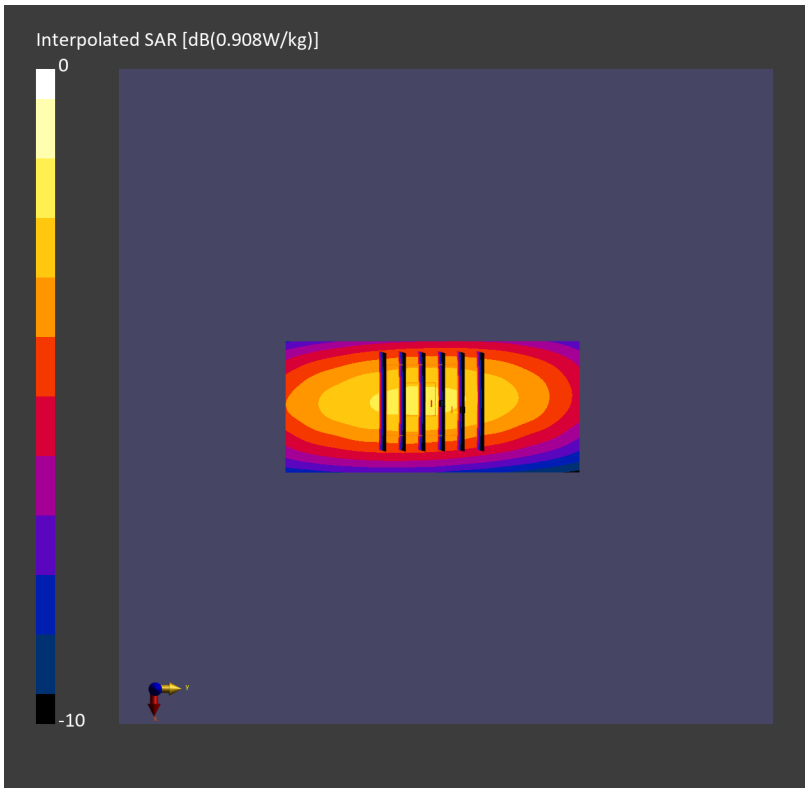

Date: 2024-05-20

System Check_Head_2450MHz

DUT: D2450V2 - SN736

Communication System: CW; Frequency: 2450.000 MHz
Medium: HSL_2450_240520 Medium parameters used: f= 2450.000 MHz; σ= 1.76 S/m; ε_r = 38.8
Ambient Temperature: 23.5°C; Liquid Temperature: 22.5°C

DASY6 Configuration:
- Probe: EX3DV4 - SN7625; ConvF(7.67, 7.67, 7.67); Calibrated: 2023-12-14
- Sensor-Surface: 1.4 mm
- Electronics: DAE4 Sn1694; Calibrated: 2023-11-17
- Phantom: ELI V8.0 (20deg probe tilt); Serial: 2192; Section: Flat
- Measurement Software: 16.2.4.2524
- UID: CW, 0

Pin=24.0dBm/Area Scan (40.0 mm x 80.0 mm): Measurement Grid: 10.0 mm x 10.0 mm
SAR (1g) = 14.0 W/kg; SAR (10g) = 6.47 W/kg;

Pin=24.0dBm/Zoom Scan (30.0 mm x 30.0 mm x 30.0 mm): Measurement Grid: 5.0 mm x 5.0 mm x 1.5 mm
Power Drift = -0.07 dB
SAR (1g) = 13.7 W/kg; SAR (8g) = 7.16 W/kg; SAR (10g) = 6.50 W/kg
Smallest distance from peaks to all points 3 dB below = 9.0 mm
Ratio of SAR at M2 to SAR at M1 = 80.8 %

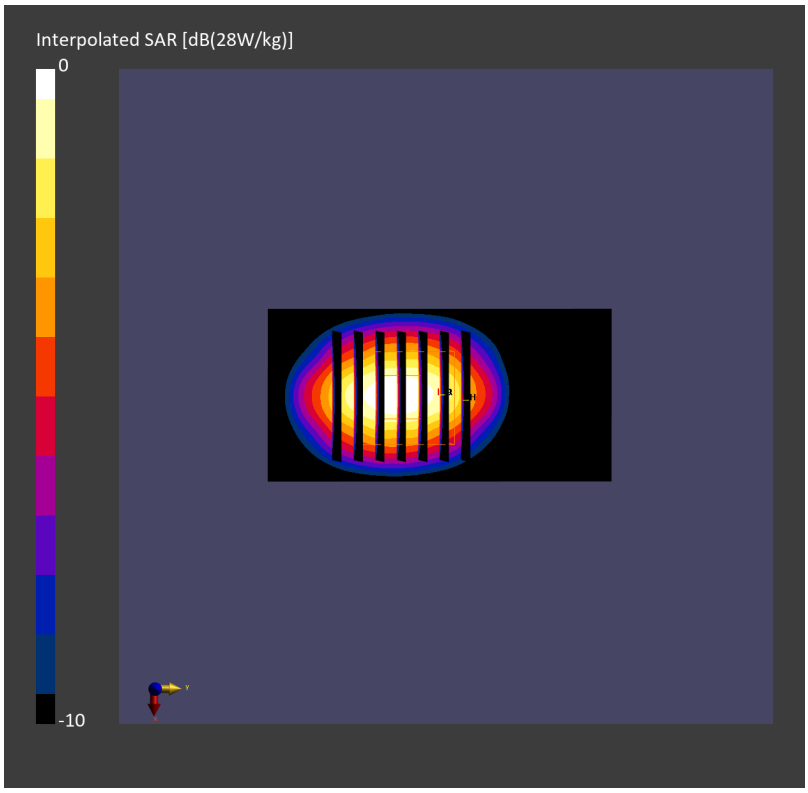

Date: 2024-05-29

System Check_Head_2450MHz

DUT: D2450V2 - SN929

Communication System: CW; Frequency: 2450.000 MHz
Medium: HSL_2450_240529 Medium parameters used: f= 2450.000 MHz; σ= 1.83 S/m; ε_r = 38.4
Ambient Temperature: 23.2°C; Liquid Temperature: 22.2°C

DASY6 Configuration:
- Probe: EX3DV4 - SN3931; ConvF(7.83, 7.83, 7.83); Calibrated: 2023-10-24
- Sensor-Surface: 1.4 mm
- Electronics: DAE4 Sn376; Calibrated: 2023-09-14
- Phantom: ELI V8.0 (20deg probe tilt); Serial: 2155; Section: Flat
- Measurement Software: 16.2.4.2524
- UID: CW, 0

Pin=17.0dBm/Area Scan (40.0 mm x 80.0 mm): Measurement Grid: 10.0 mm x 10.0 mm
SAR (1g) = 2.39 W/kg; SAR (10g) = 1.11 W/kg;

Pin=17.0dBm/Zoom Scan (30.0 mm x 30.0 mm x 30.0 mm): Measurement Grid: 5.0 mm x 5.0 mm x 1.5 mm
Power Drift = 0.02 dB
SAR (1g) = 2.41 W/kg; SAR (8g) = 1.24 W/kg; SAR (10g) = 1.12 W/kg
Smallest distance from peaks to all points 3 dB below = 9.0 mm
Ratio of SAR at M2 to SAR at M1 = 76.8 %

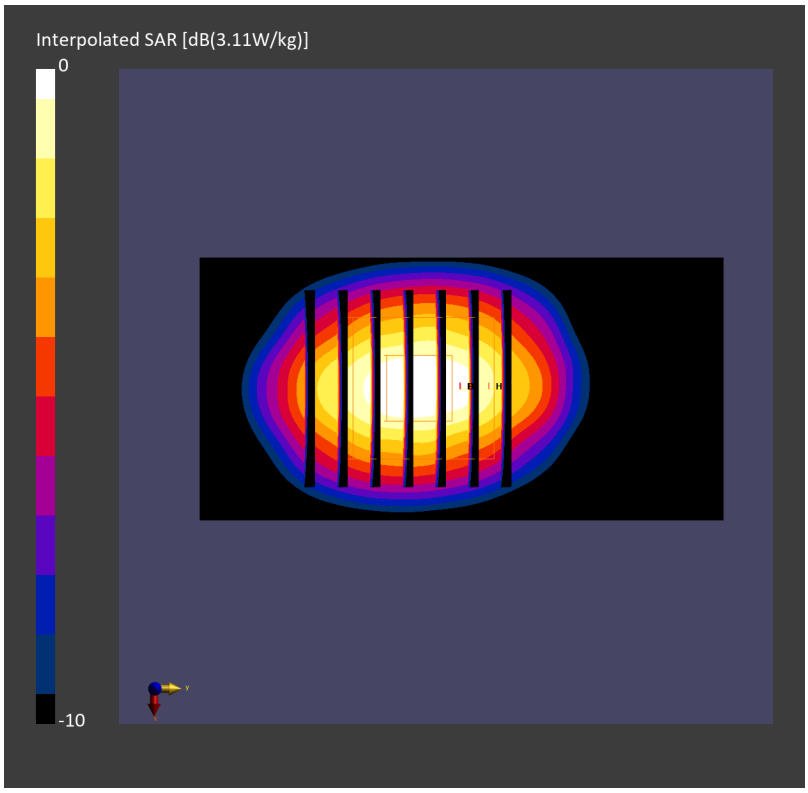

System Check_Head_2450MHz

DUT: D2450V2-929

Communication System: UID 0, CW; Frequency: 2450 MHz
Medium: HSL_2450_240529 Medium parameters used : f = 2450 MHz; σ = 1.776 S/m; ε_r = 39.405; ρ = 1000 kg/m^3
Ambient Temperature：23.6 ℃; Liquid Temperature：22.6 ℃

DASY5 Configuration:
- Probe: EX3DV4 - SN7590; ConvF(7.74, 7.6, 7.6) @ 2450 MHz; Calibrated: 2024/3/19
- Sensor-Surface: 1.4mm (Mechanical Surface Detection)
- Electronics: DAE4 Sn1776; Calibrated: 2024/2/13
- Phantom: ELI V4.0; Type: QD OVA 001 Bx; Serial: 1164
- Measurement SW: DASY52, Version 52.10 (4);SEMCAD X Version 14.6.14 (7501)

Pin=50mW/Area Scan (71x71x1): Interpolated grid: dx=1.200 mm, dy=1.200 mm
Maximum value of SAR (interpolated) = 4.11 W/kg

Pin=50mW/Zoom Scan (7x7x7)/Cube 0: Measurement grid: dx=5mm, dy=5mm, dz=5mm
Reference Value = 50.49 V/m; Power Drift = -0.06 dB
Peak SAR (extrapolated) = 4.93 W/kg
SAR(1 g) = 2.49 W/kg; SAR(10 g) = 1.18 W/kg
Smallest distance from peaks to all points 3 dB below = 9 mm
Ratio of SAR at M2 to SAR at M1 = 51.2%.
Maximum value of SAR (measured) = 4.08 W/kg

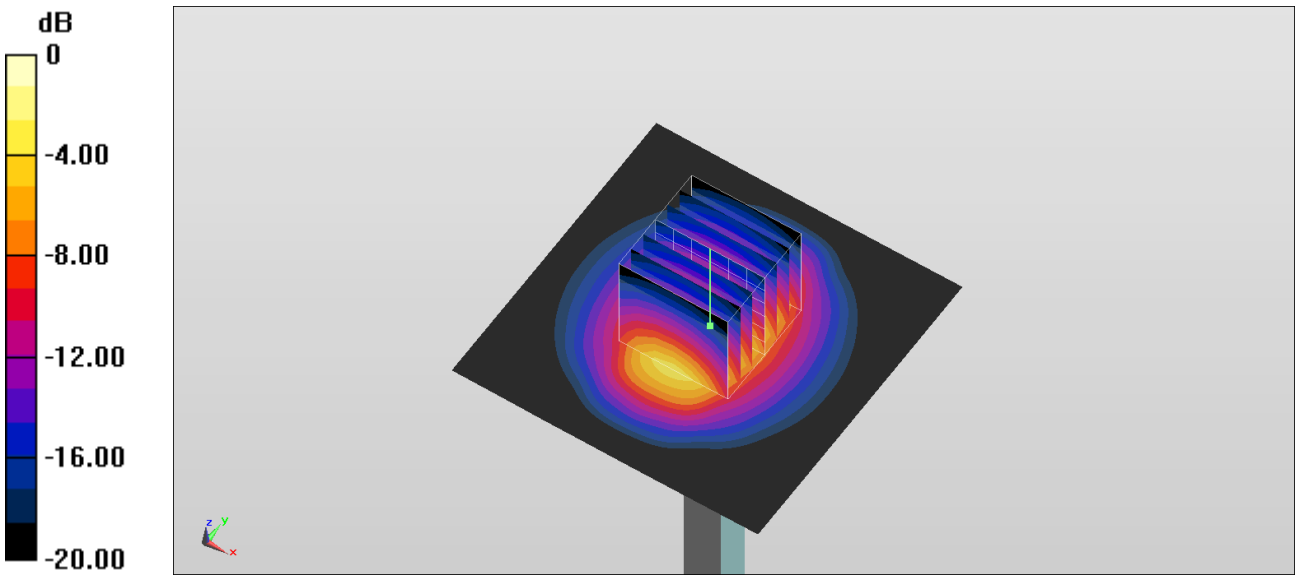

0 dB = 4.08 W/kg = 6.11 dBW/kg

Date: 2024-05-30

System Check_Head_5250MHz

DUT: D5GHzV2 - SN1006

Communication System: CW; Frequency: 5250.000 MHz
Medium: HSL_5G_240530 Medium parameters used: f= 5250.000 MHz; σ= 4.67 S/m; ε_r = 36.5
Ambient Temperature: 23.4°C; Liquid Temperature: 22.4°C

DASY6 Configuration:
- Probe: EX3DV4 - SN3931; ConvF(5.17, 5.17, 5.17); Calibrated: 2023-10-24
- Sensor-Surface: 1.4 mm
- Electronics: DAE4 Sn376; Calibrated: 2023-09-14
- Phantom: ELI V8.0 (20deg probe tilt); Serial: 2155; Section: Flat
- Measurement Software: 16.2.4.2524
- UID: CW, 0

Pin=17.0dBm/Area Scan (40.0 mm x 80.0 mm): Measurement Grid: 10.0 mm x 10.0 mm
SAR (1g) = 3.55 W/kg; SAR (10g) = 1.04 W/kg;

Pin=17.0dBm/Zoom Scan (22.0 mm x 22.0 mm x 22.0 mm): Measurement Grid: 4.0 mm x 4.0 mm x 1.4 mm
Power Drift = 0.03 dB
SAR (1g) = 3.83 W/kg; SAR (8g) = 1.28 W/kg; SAR (10g) = 1.09 W/kg
Smallest distance from peaks to all points 3 dB below = 7.6 mm
Ratio of SAR at M2 to SAR at M1 = 65.1 %

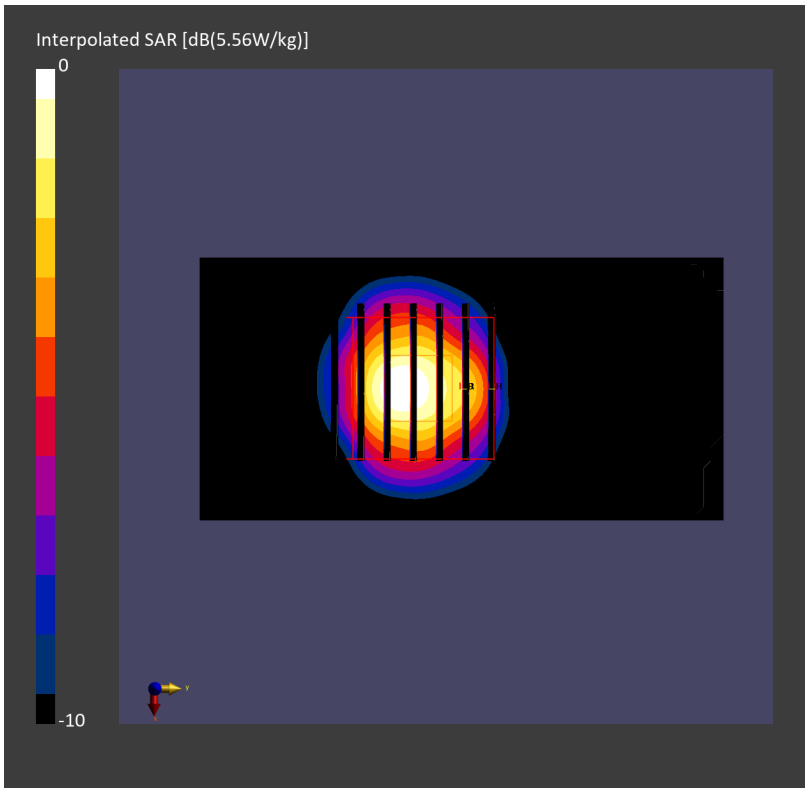

System Check_Head_5250MHz

DUT: D5GHzV2-1006

Communication System: UID 0, CW; Frequency: 5250 MHz
Medium: HSL_5G_240530 Medium parameters used: f = 5250 MHz; σ = 4.656 S/m; ε_r = 35.861; ρ = 1000 kg/m^3
Ambient Temperature：23.6 ℃; Liquid Temperature：22.6 ℃

DASY5 Configuration:
- Probe: EX3DV4 - SN7590; ConvF(5.82, 5.53, 5.73) @ 5250 MHz; Calibrated: 2024/3/19
- Sensor-Surface: 1.4mm (Mechanical Surface Detection)
- Electronics: DAE4 Sn1776; Calibrated: 2024/2/13
- Phantom: ELI V4.0; Type: QD OVA 001 Bx; Serial: 1164
- Measurement SW: DASY52, Version 52.10 (4);SEMCAD X Version 14.6.14 (7501)

Pin=50mW/Area Scan (71x71x1): Interpolated grid: dx=1.000 mm, dy=1.000 mm
Maximum value of SAR (interpolated) = 8.85 W/kg

Pin=50mW/Zoom Scan (9x9x7)/Cube 0: Measurement grid: dx=4mm, dy=4mm, dz=1.4mm
Reference Value = 43.03 V/m; Power Drift = 0.04 dB
Peak SAR (extrapolated) = 17.4 W/kg
SAR(1 g) = 3.99 W/kg; SAR(10 g) = 1.11 W/kg
Smallest distance from peaks to all points 3 dB below = 7.2 mm
Ratio of SAR at M2 to SAR at M1 = 63.1%
Maximum value of SAR (measured) = 9.95 W/kg

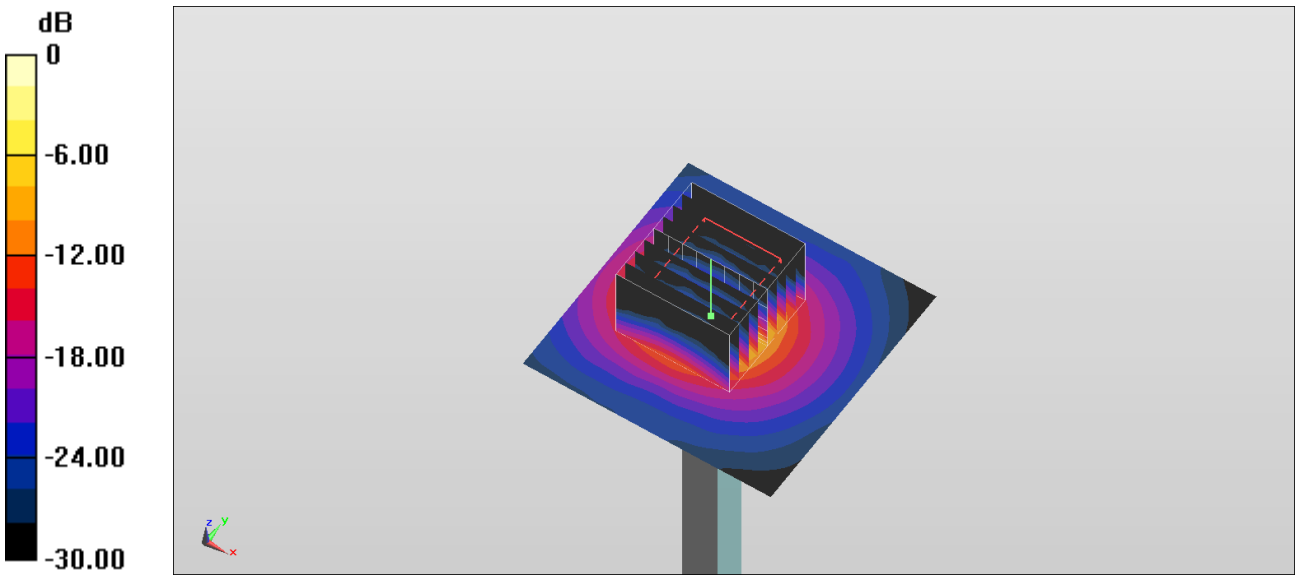

0 dB = 9.95 W/kg = 9.98 dBW/kg

Date: 2024-05-30

System Check_Head_5600MHz

DUT: D5GHzV2 - SN1006

Communication System: CW; Frequency: 5600.000 MHz
Medium: HSL_5G_240530 Medium parameters used: f= 5600.000 MHz; σ= 5.04 S/m; ε_r = 36.0
Ambient Temperature: 23.4°C; Liquid Temperature: 22.4°C

DASY6 Configuration:
- Probe: EX3DV4 - SN3931; ConvF(4.48, 4.48, 4.48); Calibrated: 2023-10-24
- Sensor-Surface: 1.4 mm
- Electronics: DAE4 Sn376; Calibrated: 2023-09-14
- Phantom: ELI V8.0 (20deg probe tilt); Serial: 2155; Section: Flat
- Measurement Software: 16.2.4.2524
- UID: CW, 0

Pin=17.0dBm/Area Scan (40.0 mm x 80.0 mm): Measurement Grid: 10.0 mm x 10.0 mm
SAR (1g) = 4.00 W/kg; SAR (10g) = 1.17 W/kg;

Pin=17.0dBm/Zoom Scan (22.0 mm x 22.0 mm x 22.0 mm): Measurement Grid: 4.0 mm x 4.0 mm x 1.4 mm
Power Drift = 0.03 dB
SAR (1g) = 4.27 W/kg; SAR (8g) = 1.42 W/kg; SAR (10g) = 1.21 W/kg
Smallest distance from peaks to all points 3 dB below = 7.6 mm
Ratio of SAR at M2 to SAR at M1 = 61.7 %

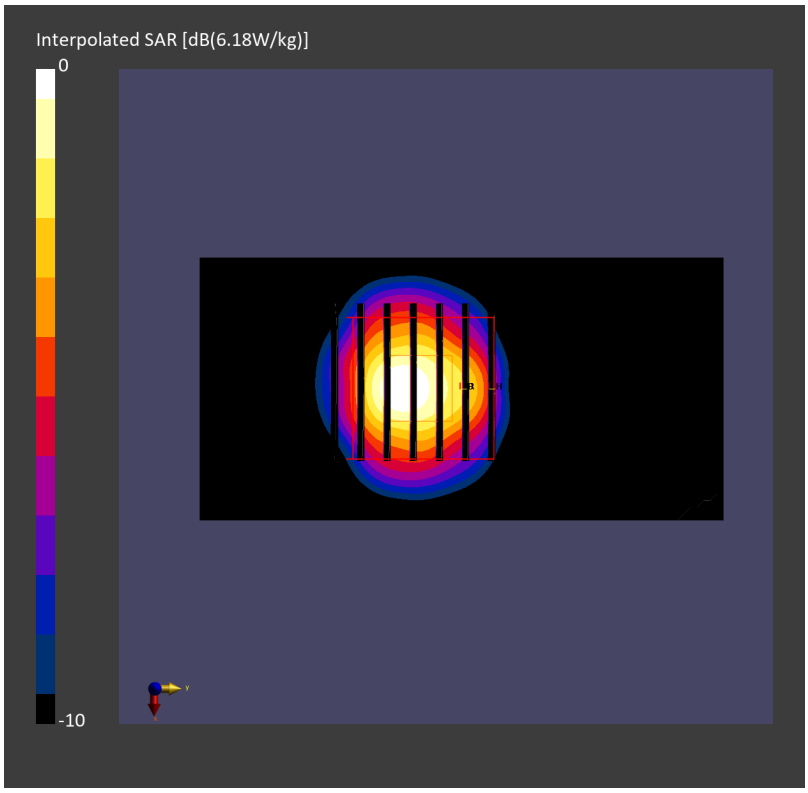

System Check_Head_5600MHz

DUT: D5GHzV2-1006

Communication System: UID 0, CW ; Frequency: 5600 MHz
Medium: HSL_5G_240530 Medium parameters used: f = 5600 MHz; σ = 4.979 S/m; ε_r = 35.346; ρ = 1000 kg/m^3
Ambient Temperature：23.6 ℃; Liquid Temperature：22.6 ℃

DASY5 Configuration:
- Probe: EX3DV4 - SN7590; ConvF(4.86, 4.69, 4.82) @ 5600 MHz; Calibrated: 2024/3/19
- Sensor-Surface: 1.4mm (Mechanical Surface Detection)
- Electronics: DAE4 Sn1776; Calibrated: 2024/2/13
- Phantom: ELI V4.0; Type: QD OVA 001 Bx; Serial: 1164
- Measurement SW: DASY52, Version 52.10 (4);SEMCAD X Version 14.6.14 (7501)

Pin=50mW/Area Scan (71x71x1): Interpolated grid: dx=1.000 mm, dy=1.000 mm
Maximum value of SAR (interpolated) = 11.4 W/kg

Pin=50mW/Zoom Scan (9x9x7)/Cube 0: Measurement grid: dx=4mm, dy=4mm, dz=1.4mm
Reference Value = 45.65 V/m; Power Drift = 0.04 dB
Peak SAR (extrapolated) = 19.9 W/kg
SAR(1 g) = 4.41 W/kg; SAR(10 g) = 1.22 W/kg
Smallest distance from peaks to all points 3 dB below = 6.6 mm
Ratio of SAR at M2 to SAR at M1 = 61.2%
Maximum value of SAR (measured) = 11.5 W/kg

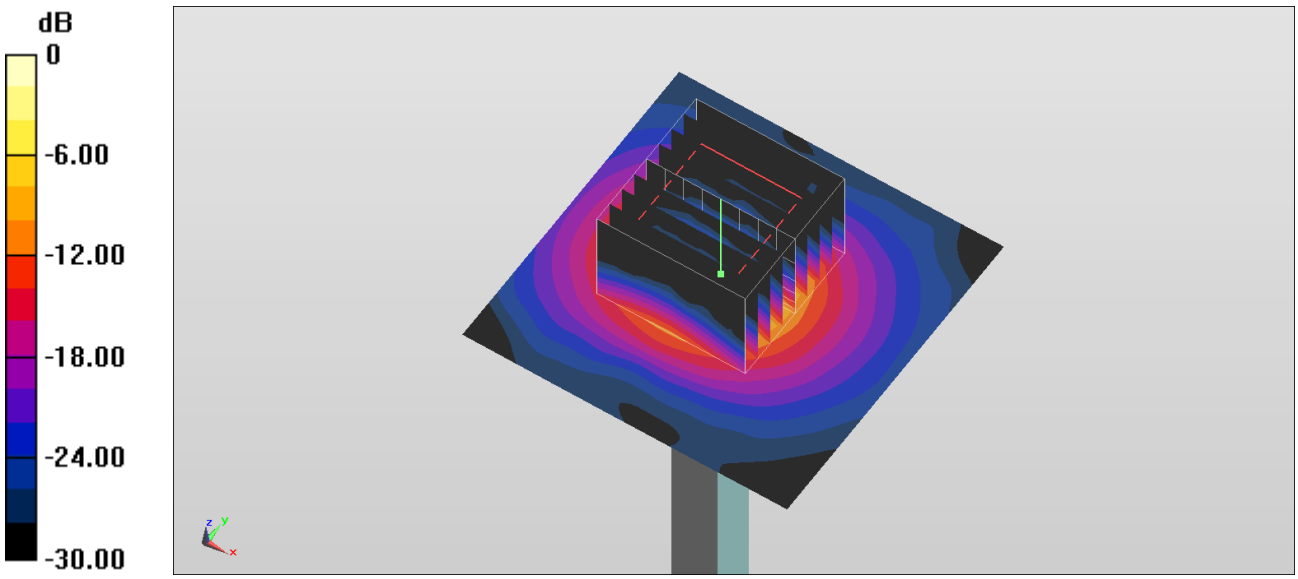

0 dB = 11.5 W/kg = 10.59 dBW/kg

Date: 2024-05-30

System Check_Head_5750MHz

DUT: D5GHzV2 - SN1006

Communication System: CW; Frequency: 5750.000 MHz
Medium: HSL_5G_240530 Medium parameters used: f= 5750.000 MHz; σ= 5.20 S/m; ε_r = 35.8
Ambient Temperature: 23.4°C; Liquid Temperature: 22.4°C

DASY6 Configuration:
- Probe: EX3DV4 - SN3931; ConvF(4.8, 4.8, 4.8); Calibrated: 2023-10-24
- Sensor-Surface: 1.4 mm
- Electronics: DAE4 Sn376; Calibrated: 2023-09-14
- Phantom: ELI V8.0 (20deg probe tilt); Serial: 2155; Section: Flat
- Measurement Software: 16.2.4.2524
- UID: CW, 0

Pin=17.0dBm/Area Scan (40.0 mm x 80.0 mm): Measurement Grid: 10.0 mm x 10.0 mm
SAR (1g) = 3.68 W/kg; SAR (10g) = 1.08 W/kg;

Pin=17.0dBm/Zoom Scan (22.0 mm x 22.0 mm x 22.0 mm): Measurement Grid: 4.0 mm x 4.0 mm x 1.4 mm
Power Drift = -0.02 dB
SAR (1g) = 4.26 W/kg; SAR (8g) = 1.38 W/kg; SAR (10g) = 1.18 W/kg
Smallest distance from peaks to all points 3 dB below = 6.9 mm
Ratio of SAR at M2 to SAR at M1 = 59.2 %

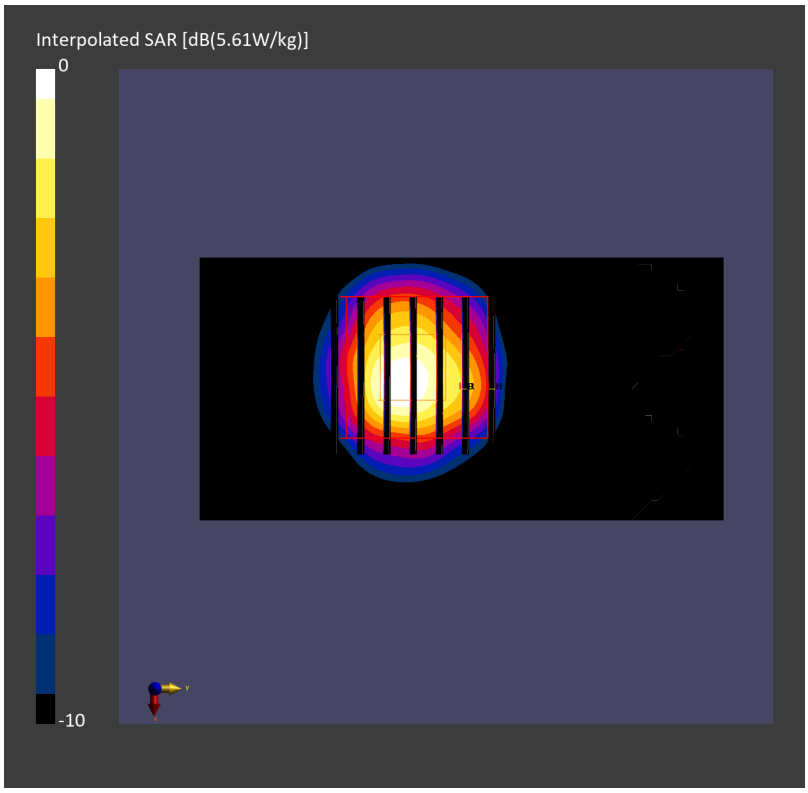

System Check_Head_5750MHz

DUT: D5GHzV2-1006

Communication System: UID 0, CW ; Frequency: 5750 MHz
Medium: HSL_5G_240530 Medium parameters used: f = 5750 MHz; σ = 5.151 S/m; ε_r = 35.086; ρ = 1000 kg/m^3
Ambient Temperature：23.6 ℃; Liquid Temperature：22.6 ℃

DASY5 Configuration:
- Probe: EX3DV4 - SN7590; ConvF(5.05, 4.92, 5.06) @ 5750 MHz; Calibrated: 2024/3/19
- Sensor-Surface: 1.4mm (Mechanical Surface Detection)
- Electronics: DAE4 Sn1776; Calibrated: 2024/2/13
- Phantom: ELI V4.0; Type: QD OVA 001 Bx; Serial: 1164
- Measurement SW: DASY52, Version 52.10 (4);SEMCAD X Version 14.6.14 (7501)

Pin=50mW/Area Scan (71x71x1): Interpolated grid: dx=1.000 mm, dy=1.000 mm
Maximum value of SAR (interpolated) = 9.35 W/kg

Pin=50mW/Zoom Scan (8x8x7)/Cube 0: Measurement grid: dx=4mm, dy=4mm, dz=1.4mm
Reference Value = 38.40 V/m; Power Drift = 0.09 dB
Peak SAR (extrapolated) = 18.9 W/kg
SAR(1 g) = 3.99 W/kg; SAR(10 g) = 1.08 W/kg
Smallest distance from peaks to all points 3 dB below = 6.8 mm
Ratio of SAR at M2 to SAR at M1 = 60.2%
Maximum value of SAR (measured) = 10.2 W/kg

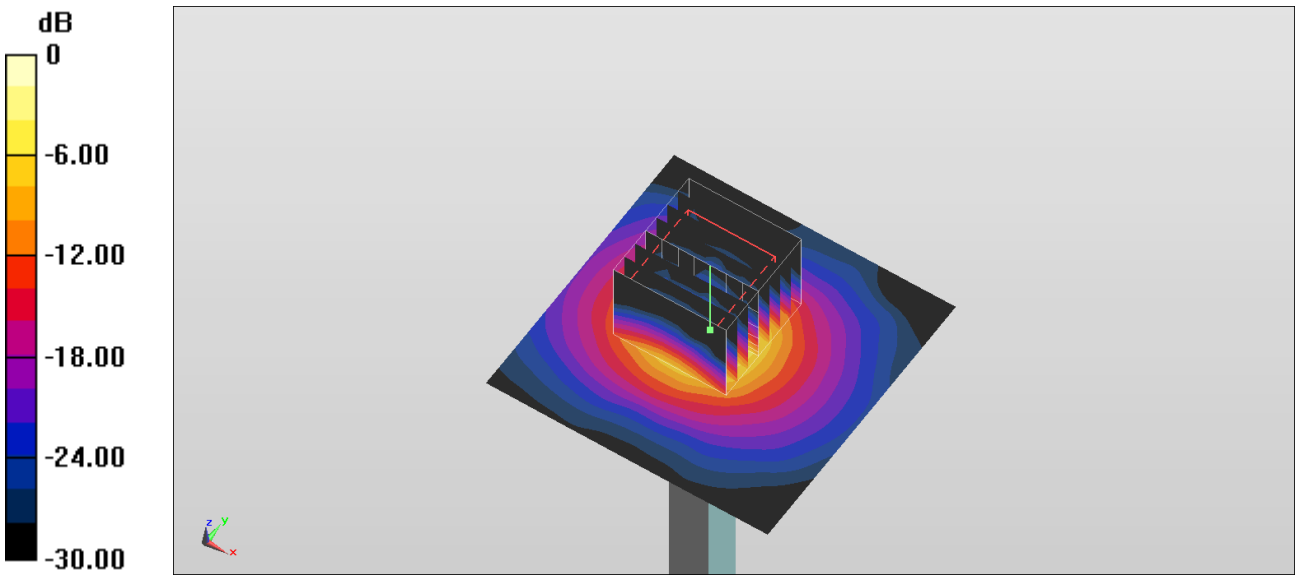

0 dB = 9.35 W/kg = 9.71 dBW/kg