Uponor Smatrix Wave PULSE

EN Installation and operation manual

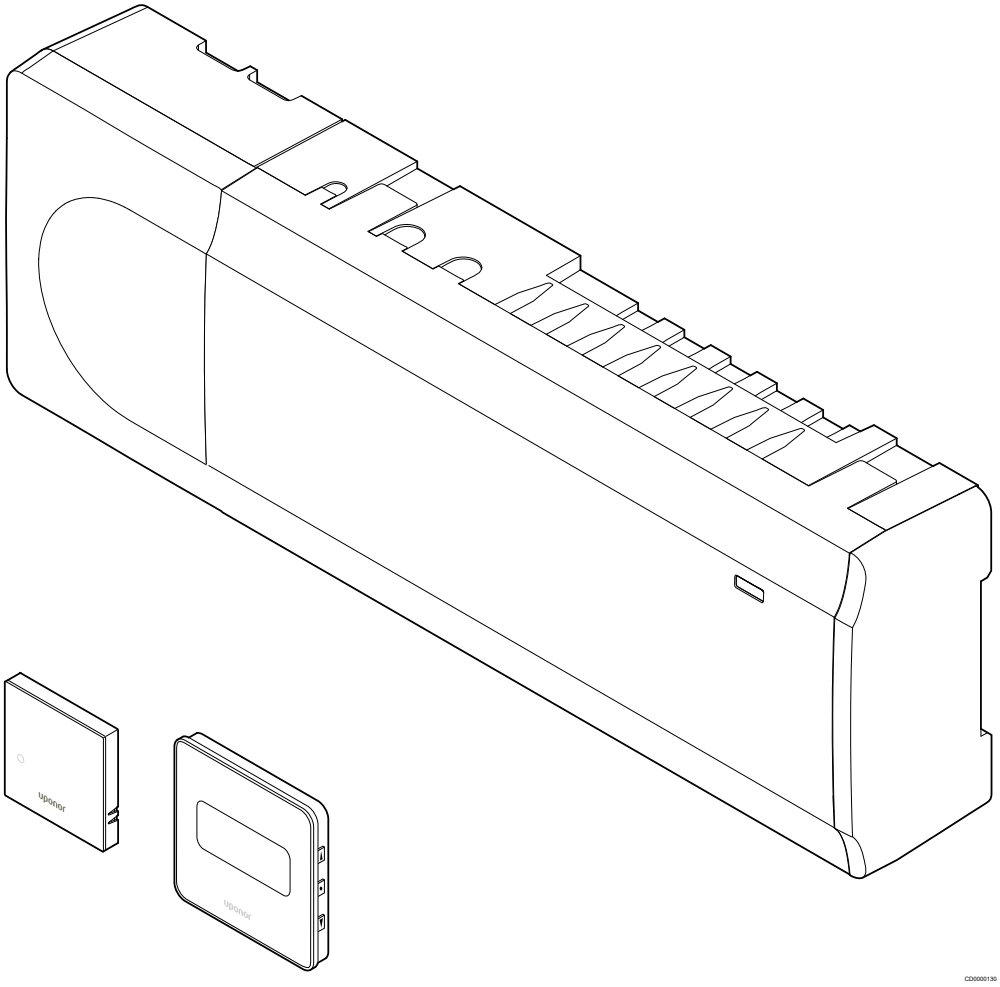

Table of contents

1 Copyright and disclaimer.... 4

2 Preface.... 5

2.1 Safety instructions.... 5
2.2 Limitations for radio transmission.... 5
2.3 Correct disposal of this product (Waste Electrical and Electronic Equipment).... 5

3 Uponor Smatrix Wave PULSE system description.... 6

3.1 System overview.... 6
3.2 Example of a system.... 6
3.3 Uponor Smatrix Wave PULSE components.... 7
3.4 Functions.... 12

4 Install Uponor Smatrix Wave PULSE.... 16

4.1 Installation procedure.... 16
4.2 Prepare for installation.... 16
4.3 Installation example.... 17
4.4 Network connectivity.... 19

5 Install Uponor Smatrix Wave PULSE room controller.... 21

5.1 Placement of room controller.... 21
5.2 Connect optional exansion module.... 22
5.3 Attach room controller to the wall.... 22
5.4 Install room controller antenna.... 23
5.5 Install communication module.... 24
5.6 Connect actuators to room controller.... 26
5.7 Connect electrical underfloor heating.... 26
5.8 Connect input to room controller GPI.... 27
5.9 Connect output to room controller relays.... 28
5.10 Connect room controller to AC power.... 32
5.11 Test actuators.... 33

6 Install Uponor Smatrix Wave room thermostat.... 34

6.1 Uponor Smatrix Wave T-161.... 34
6.2 Uponor Smatrix Wave T-169.... 37

7 Install Uponor Smatrix Wave relay module.... 41

7.1 Placement of relay module.... 41
7.2 Attach relay module to the wall.... 41
7.3 Connect output to relay module.... 41
7.4 Register relay module to room controller.... 44
7.5 Use relay module to connect fan coils.... 46
7.6 Use relay module for time delayed two stage additional cooling (requires communication module).... 48

8 Install another Uponor Smatrix room controller in the system.... 50

8.1 Preparation.... 50
8.2 Register sub room controller to master room controller.... 50

9 Finishing installation.... 52

10 Operate Uponor Smatrix Wave PULSE room controller.... 75

10.1 Principle of operation.... 53
10.2 Normal operation without optional scheduling programs.... 53
10.3 Operation with scheduling programs.... 53
10.4 Run mode.... 53
10.5 Room controller LEDs.... 54
10.6 Reset the controller.... 55
10.7 Unregister room controller channels.... 56

11 Operate Uponor Smatrix PULSE communication module.... 57

11.1 Communication module layout.... 57
11.2 Communication module LEDs.... 57
11.3 Factory reset the communication module.... 57

12 Operate Uponor Smatrix Wave thermostats.... 58

12.1 Thermostat type.... 58
12.2 Thermostat layout.... 58
12.3 Start up.... 61
12.4 Adjust temterature.... 61
12.5 Digital thermostat functions.... 61
12.6 Replace batteries.... 65
12.7 Factory reset.... 66

13 Maintenance..... 67

13.1 Manual preventive maintenance..... 67
13.2 Automatic preventive maintenance..... 67
13.3 Corrective maintenance..... 67

14 Troubleshooting..... 68

14.1 General..... 68
14.2 Troubleshooting after installation..... 69
14.3 Digital thermostat alarms/problems..... 70
14.4 Analogue thermostat alarms/problems..... 71
14.5 Communication module alarms/problems..... 72
14.6 Room controller alarms/problems..... 74
14.7 Contact the installer..... 75
14.8 Installer instructions..... 75

15 Technical data..... 76

18.1 Technical data..... 76
18.2 Cable specifications..... 77
18.3 Uponor Smatrix Wave PULSE room controller layout..... 78
18.4 Wiring diagram..... 79
18.5 Dimensions..... 79

1 Copyright and disclaimer

Uponor has prepared this installation and operation manual and all the content included solely for information purposes. The contents of the manual (including graphics, logos, icons, text, and images) are copyrighted and protected by worldwide copyright laws and treaty provisions. You agree to comply with all copyright laws worldwide in your use of the manual. Modification or use of any of the contents of the manual for any other purpose is a violation of Uponor's copyright, trademark and other proprietary rights.

The presumption for the manual is that the safety measures have been fully complied with and, further, that Uponor Smatrix control system, including any components that are part of such system, covered by the manual:

- is selected, planned and installed and put into operation by a licensed and competent installer in compliance with current (at the time of installation) installation instructions provided by Uponor as well as in compliance with all applicable building and plumbing codes and other requirements and guidelines;
- has not been (temporarily or continuously) exposed to temperatures, pressure and/or voltages that exceed the limits printed on the products or stated in any instructions supplied by Uponor;
- remain in its originally installed location and is not repaired, replaced or interfered with, without prior written consent of Uponor;
- is connected to potable water supplies or compatible plumbing, heating and/or cooling products approved or specified by Uponor;
- is not connected to or used with non-Uponor products, parts or components except for those approved or specified by Uponor; and
- does not show evidence of tampering, mishandling, insufficient maintenance, improper storage, neglect or accidental damage before installation and being put into operation.

While Uponor has made efforts to ensure that the manual is accurate, Uponor does not guarantee or warrant the accuracy of the information contained herein. Uponor reserves the right to modify the specifications and features described herein, or discontinue manufacture of the Uponor Smatrix products described at any time without prior notice or obligation. The manual is provided "as is" without warranties of any kind, either expressed or implied. The information should be independently verified before using it in any manner.

To the fullest extent permissible, Uponor disclaims all warranties, expressed or implied, including, but not limited to, the implied warranties of merchantability, fitness for particular purpose and non-infringement.

This disclaimer applies to, but is not limited to, the accuracy, reliability or correctness of the manual.

Under no circumstances shall Uponor be liable for any indirect, special, incidental or consequential damages or loss that result from the use of or the inability to use the materials or information in the manual, or any claim attributable to errors, omission or other inaccuracies in the manual, even if Uponor has been advised of the possibility of such damages.

This disclaimer and any provisions in the manual do not limit any statutory rights of consumers.

Compliance

This device complies with part 15 of the FCC Rules. Operation is subject to the following two conditions:

(1) 1) This device may not cause harmful interference, and

(2) 2) This device must accept any interference received, including interference that may cause undesired operation.

Note: *The grantee is not responsible for any changes or modifications not expressly approved by the party responsible for compliance. Such modifications could void the user's authority to operate the equipment.:*

This device contains licence-exempt transmitter(s)/ receiver(s) that comply with Innovation, Science and Economic Development Canada's licence-exempt RSS(s). Operation is subject to the following two conditions:

(1) This device may not cause interference.
(2) This device must accept any interference, including interference that may cause undesired operation of the device.

L'émetteur/récepteur exempt de licence contenu dans le présent appareil est conforme aux CNR d'Innovation, Sciences et Développement économique Canada applicables aux appareils radio exempts de licence. L'exploitation est autorisée aux deux conditions suivantes :

1) L'appareil ne doit pas produire de brouillage;
2) L'appareil doit accepter tout brouillage radioélectrique subi, même si le brouillage est susceptible d'en compromettre le fonctionnement.

FCC ID: V9MSM4NA0 and V9MSM4NA1
IC: 7664A-SM4NA0 and 7664A-SM4NA1

2 Preface

This installation and operation manual describes how to install and operate the components of the system.

2.1 Safety instructions

Warnings used in this manual

The following symbols are used in Uponor ducumentation to indicate special precautions when installing andoperating any Uponor equipment:

STOP	**Warning!** Risk of injury. Ignoring warnings can cause injury or damage components.
	Caution! Ignoring cautions can cause malfunctions.
	Note Important information to the section in the manual.

Safety measures

Conform to the following measures when installing and operating any Uponor equipment:

- Read and follow the instructions in the installation and operation manual.
- Installation must be performed by a competent person in accordance with local regulations.
- It is prohibited to make changes or modifications not specified in this manual.
- All power supplies must be switched off before starting any wiring work.
- Do not use water to clean Uponor components.
- Do not expose the Uponor components to flammable vapours or gases.

Uponor cannot accept any responsibility for damage or breakdown that can result from ignoring these instructions.

Power

STOP	**Warning!** The Uponor system uses 115 VAC, 60 Hz power. In case of emergency, immediately disconnect the power.

Technical constraints

	Caution! To avoid interference, keep installation/data cables away from power cables of more than 50 V.

2.2 Limitations for radio transmission

Wireless Uponor products uses radio transmission for communication. The frequency used is reserved for similar applications, and the chances of interference from other radio sources are very low.

However, in some rare cases, it might not be possible to establish perfect radio communication. The transmission range is sufficient for most applications, but each building has different obstacles affecting radio communication and maximum transmission distance. If communication difficulties exist, Uponor recommends relocating the antenna to a more optimal position, and not installing Uponor radio sources too close to each other **(at least 16" / 40cm apart)**, for solving exceptional problems.

2.3 Correct disposal of this product (Waste Electrical and Electronic Equipment)

This marking shown on the product or its literature indicates that it should not be disposed with other household wasted at the end of its working life. To prevent possible harm to the environment or human health from uncontrolled waste disposal, please separate this from other types of wastes and recycle it responsibly to promote the sustainable reuse of material resources.

Household users should contact either the distributor where they purchased this product, or their local government office, for details of where and how they can take this item for environmentally safe recycling.

Business users should contact their supplier and check the terms and conditions of the purchase contract. This product should not be mixed with other commercial wastes of disposal.

3 Uponor Smatrix Wave PULSE system description

Uponor Smatrix Wave is a control system designed for underfloor heating and cooling installations. Comfort, user friendliness and temperature control for each individual room of a home can be combined through the various components.

3.1 System overview

Uponor Smatrix Wave consists of a controller, a communication module (optional), thermostats, and actuators. The controller manages the operation of the actuators when the thermostats detect a demand for heating and/or cooling

System optimization and settings (for up to four room controllers) is facilitated via the Uponor Smatrix PULSE app (connected via the communication module). The system can function without the communication module, but with reduced functionality.

Uponor Smatrix Wave is controlled by different types of thermostats. Designed for maximum comfort, the thermostats communicate with the room controller by radio link. It is possible to mix the different types of Uponor Smatrix Wave thermostats in the same installation.

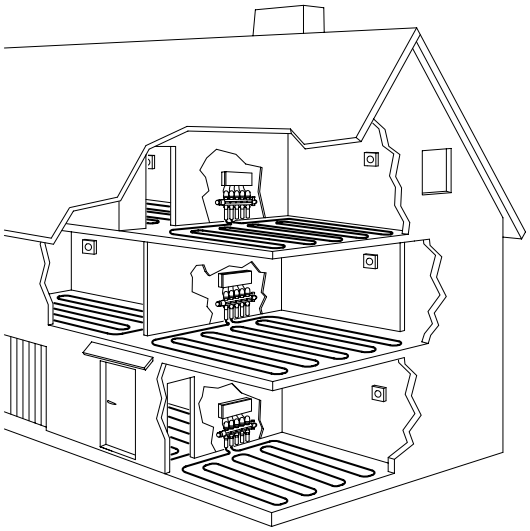

3.2 Example of a system

The illustration below shows Uponor Smatrix Wave with installation and thermostats.

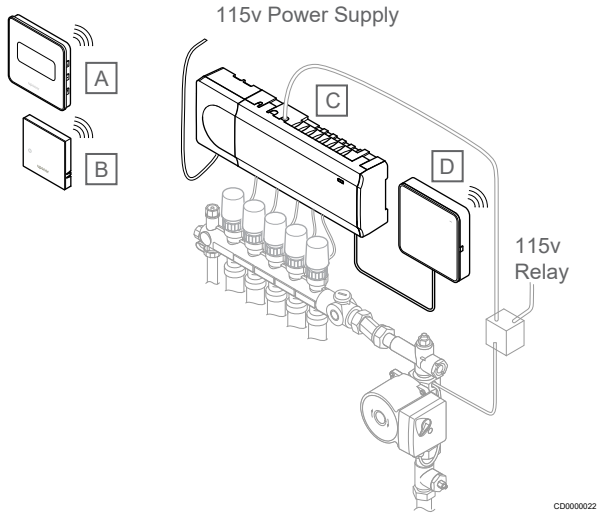

Note

The floor sensor can be connected to both thermostats which can be used for floor temperature limitation.

For example, the maximum limitation can protect a sensitive floor covering from exposure of too high temperatures when there is a high heating demand. The minimum limitation can keep a tiled floor warm even when there is a no general heating demand for the room.

Item	Description
A	*A3800169 Uponor Smatrix Wave T-169,*
B	*A3800161 Uponor Smatrix Wave T-161*
C	*A380265C Uponor Smatrix Pulse Controller X-265*
D	*A3801208 Uponor Smatrix Communication Module R-208*

Uponor Smatrix Wave PULSE X-265, Page 7 (room controller)

Uponor Smatrix PULSE Com R-208, Page 8 (communication module)

3.3 Uponor Smatrix Wave PULSE components

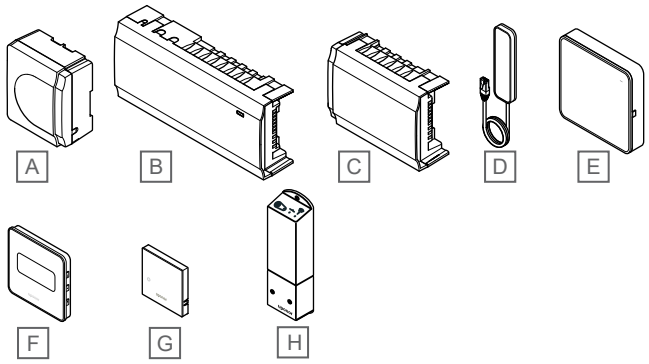

Item	Part Number	Smatrix Part Description
A	A3850050	Transformer module
B	A380265C	Room controller with communication module
	A380265A	Room controller with antenna
C	A3801262	Expansion module
D	A3801265	Antenna, replacement part
E	A3801208	Communication module, replacement part
F	A3800169	Digital thermostat
G	A3800161	Mini Sensor
H	A3801263	Relay Module

Room controller

Caution!

Only 24 V Uponor actuators are compatible with the room controller.

The room controller operates the actuators, which in turn affect the flow of the supply water, to change the indoor temperature using information transmitted from registered thermostats and system parameters.

Up to six channels and eight actuators can be operated by the room controller which is typically located near the heating system manifolds.

The illustration above shows the room controller with the transformer module and actuators.

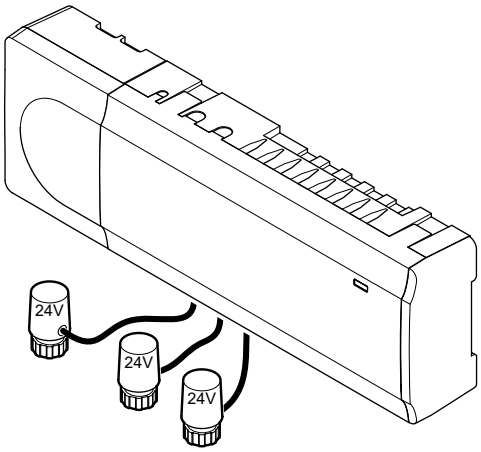

Uponor Smatrix Room Controller

Main characteristics:

- Integrated Dynamic Energy Management functions such as autobalancing (on by default). Other functions such as comfort setting, room bypass, and supply temperature monitoring requires Uponor Smatrix PULSE app (requires communication module).
- Electronic control of actuators.
- Connection of maximum eight actuators (24 V).
- 2-way communication with up to six room thermostats.
- Heating/cooling function (advanced), and/or Comfort/ECO mode switched by dry contact, or Uponor Smatrix PULSE app (requires communication module).
- Separate relays for control of pump and boiler (other control functionality available via communication module and Uponor Smatrix PULSE app).
- Valve and pump exercise.
- Relative humidity control (Uponor Smatrix PULSE app required).
- Control of combined underfloor heating/cooling and ceiling cooling, or fancoils, (requires communication module and Uponor Smatrix PULSE app).
- Lower indoor temperature in heating mode, or increase indoor temperature in cooling mode, with ECO mode. ECO mode is activated in all rooms at once using a dry contact, public thermostat, or Uponor Smatrix PULSE app (requires communication module). To activate ECO mode in a single room use a programmable digital thermostat, or ECO profiles.

Options:

- App connectivity via communication module (remote connection requires connection to Uponor cloud services).
- The room controller can be expanded with a slave module which adds an extra six thermostat channels and six actuator outputs.
- Connect up to four room controllers into one system (requires communication module and the Uponor Smatrix PULSE app).
- Modular placement (detachable transformer).
- Cabinet or wall mounted (DIN rail or supplied screws).
- Free placement and orientation when installing the room controller (except the antenna/communication module which must be installed vertically).

Components of the room controller

The illustration below shows the room controller and its components.

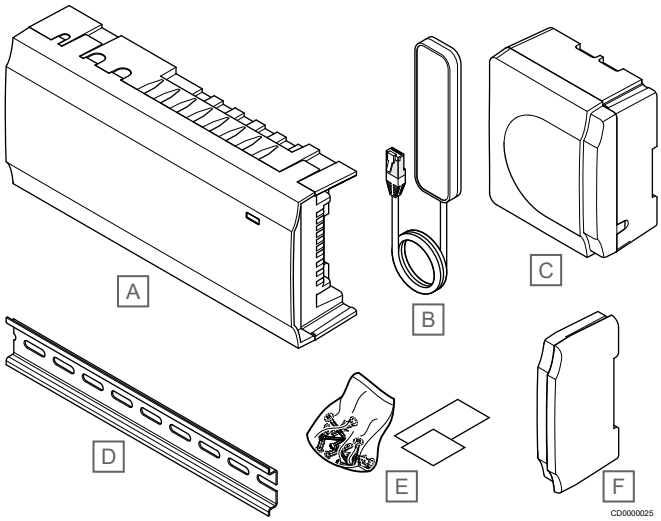

Item	Description
A	Uponor Smatrix Wave PULSE X-265
B	Antenna
C	Transformer module
D	DIN rail
E	Mounting material
F	End cap

Communication module

Note

Setting up a system with a communication module requires a mobile device (smart phone/tablet).

Note

It is recommended to attach the communication module to a wall outside of the cabinet when using Wi-Fi connection.

The communication module enables local and remote (requires connection to Uponor cloud services) access to the room controller from a mobile device (using the Uponor Smatrix PULSE app).

The communication module contains both an antenna module (for internal communication with thermostats and such), and a local network module for Wi-Fi or ethernet communication.

The app acts as a link between the user/installer and the room controller(s) running in the system, displaying information and enabling simplified programming of all relevant system settings. The Uponor Smatrix PULSE app can be downloaded from Google Play (Android) or App Store (iOS).

The Uponor Smatrix Wave system can be operated without the app and communication module, but only with basic functionality (using the thermostats).

Uponor Smatrix PULSE Communication Module

Main characteristics:

- Uponor Smatrix PULSE app connectivity via either Wi-Fi or ethernet.
- Internal radio antenna for communication within the Uponor Smatrix system (eliminates the need for the regular antenna).
- Extra functionality (using Uponor Smatrix PULSE app):
  - Heating/cooling settings
  - Extra relay functionality (chiller, dehumidifier etc).
  - Integrate up to four room controller into one system.

Options:

- Cabinet or wall mounted (DIN rail or supplied screws).

Components of the communication module

The illustration below shows the communications module and its components.

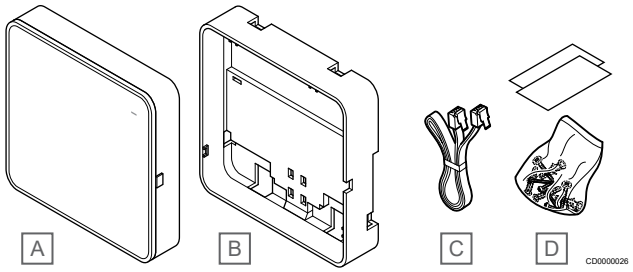

Item	Description
A	Uponor Smatrix PULSE Com R-208
B	Optional back mount for DIN-rail
C	Communication cable, RJ45
D	Mounting hardware

Thermostats

Note

The thermostat is affected by the temperature of the surrounding surfaces as well as the ambient air temperature.

The thermostats communicate with the room controller through radio transmissions and are used either individually or in combination with each other.

The following Uponor Smatrix thermostats can be used in the system:

- *Uponor Smatrix Wave T-161, Page 8*
- *Uponor Smatrix Wave T-169, Page 10*

Uponor Smatrix Wave T-161

The thermostat is designed to be as small as possible, and still able to control the room temperature.

Main characteristics:

- Operative sensor for increased comfort.
- Adjust setpoint temperature via the Uponor Smatrix PULSE app (requires communication module).
- Setpoint range is 5 – 35 °C (maximum and minimum setting may be limited by other system settings).
- Optional floor temperature sensor can be connected to the thermostat. Floor temperature limitation settings (maximum and minimum) are only available using the Uponor Smatrix PULSE app (requires communication module). Otherwise system defaults are used to limitation.
- Relative humidity limit indicated in the Uponor Smatrix PULSE app (requires communication module).
- Can be placed up to 30 meters away from the room controller.

Components of the thermostat:

The illustration below shows the thermostat and its components.

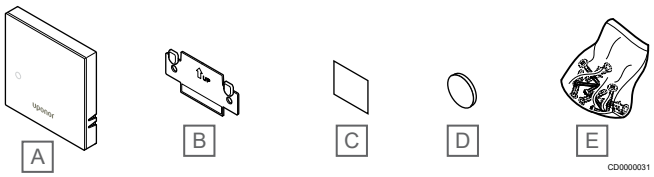

Item	Description
A	Uponor Smatrix Wave T-161
B	Wall bracket
C	Adhesive tape
D	Battery (CR2032 3V)
E	Mounting hardware

Uponor Smatrix Wave T-169 digital thermostat

The thermostat shows the ambient, set temperature, or relative humidity on the display. Temperature settings are adjusted using ▲/▼ buttons on the side of the thermostat.

Main characteristics:

- Power saving e-paper display (updates every 10 minutes).
- Displays Celsius or Fahrenheit.
- Operative sensor for increased comfort.
- Calibration of displayed room temperature.
- Heating/cooling demand as well as low battery indication on display.
- Displays Uponor logo and software version during power up sequence.
- Setpoint range is 5 – 35 °C (maximum and minimum setting may be limited by other system settings).
- Room temperature regulation with use of optional external temperature sensors.
- Displays optional temperature sensor values if sensors are connected and relevant room temperature regulation is activated.
- Switch between Comfort and ECO mode with scheduling (requires Uponor Smatrix PULSE app).
- Adjust ECO setback value.
- Relative humidity limit alarm indicated in display (requires communication module).
- Invert display color.
- Can be placed up to 30 meters away from the room controller.

Components of the thermostat:

The illustration below shows the thermostat and its components.

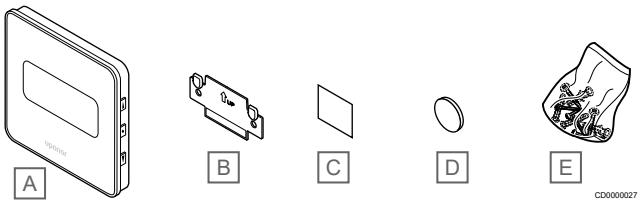

Item	Description
A	Uponor Smatrix Wave T-169
B	Wall bracket
C	Adhesive tape
D	Battery (CR2032 3V)
E	Mounting material

Expansion module

The Uponor Smatrix Wave room controller can be expanded with six extra channels and actuator outputs using a Slave module.

Uponor Smatrix Wave M-262

Note

Only one slave module extension is supported per room controller.

Main characteristics:

- Easy plug in installation on existing room controller, no additional wiring needed.
- Register up to six extra thermostats to the system.
- Connect up to six extra actuators (24 V).
- Electronic control of actuators.
- Valve exercise.

Components of the slave module

The illustration below shows the slave module and its components.

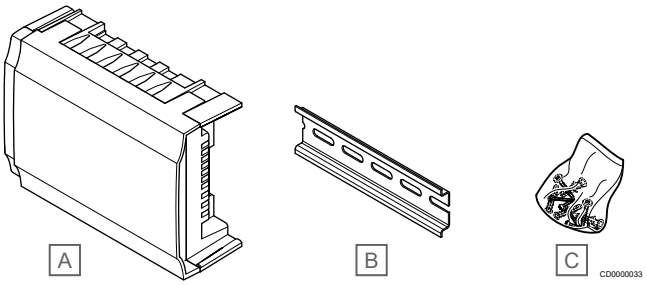

Item	Description
A	Uponor Smatrix Wave M-262
B	DIN rail
C	Mounting material

Relay module

The relay module adds two extra output relays to the system.

Uponor Smatrix Wave M-161

Main characteristics:

- Potential free contacts (24 VAC, 5 A).
- Requires an Uponor Smatrix Wave room controller.
- Pump control and heating/cooling output function.
- Pump and dehumidifier control function (requires communication module and Uponor Smatrix PULSE app).
- Boiler and chiller control function (requires communication module and Uponor Smatrix PULSE app).
- Comfort/ECO and ventilation control function (requires communication module and Uponor Smatrix PULSE app).
- Fan coil control (requires communication module and Uponor Smatrix PULSE app for the fan coil to be linked to a room channel).
- Optional two stage cooling function (requires activation on the relay module, and the communication module).

  See *Use relay module for time delayed two stage additional cooling (requires communication module), Page 68* for more information.
- Can be placed up to 30 meters away from the room controller.

Components of the relay module

The illustration below shows the relay module and its components.

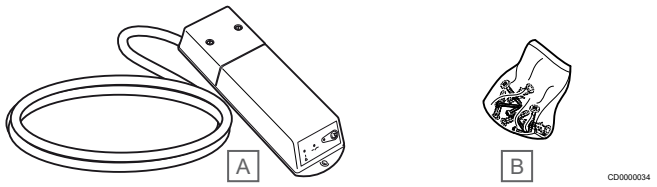

Item	Description
A	Uponor Smatrix Wave M-161
B	Mounting hardware

Uponor actuators

Uponor actuators are mounted on top of the manifold valves and is operated using either on/off signals or pulse width modulation (PWM) signals.

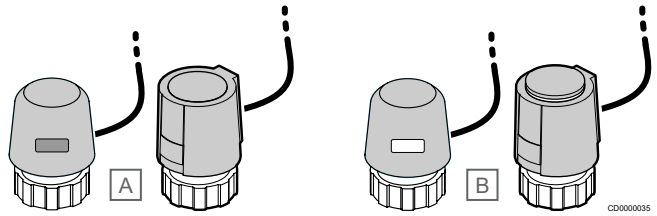

A Actuator has closed the valve – empty indicator

B Actuator has opened the valve – white indicator

On/off control

When installing a system with on/off control, manual balancing of the system is required.

As soon as the temperature measured at a thermostat is lower (heating mode) or higher (cooling mode) than the setpoint temperature, a demand to change the room temperature is created and sent to the room controller. The room controller will open the actuators according to current operating mode and other settings. Once the set temperature is reached, this information is sent and the actuators are closed. The indicator on the actuator shows, with a white bar, how much it is opened. If indicator (white) is fully shown it is fully opened, no white bar shown means that the actuator is closed.

Time to open and close an actuator may take a couple of minutes.

PWM control

Note

Autobalancing can be used in combination with hydronic balancing.

PWM control is used when the Autobalancing function is active.

When installing a system with PWM control, all balancing valves can be fully opened, the system is balanced automatically.

See *Autobalancing, Page 13*, for more information.

3.4 Functions

Note

Setting up a system with a communication module requires a mobile device (smart phone/tablet).

The Uponor Smatrix room controler is used to operate an underfloor heating and/or cooling system in a house.

The thermostats registered to the room controller is used to control the actuators mounted on top of the manifold(s).

As soon as the temperature measured at a thermostat is lower (heating mode) or higher (cooling mode) than the setpoint temperature, a demand to change the room temperature is created and sent to the room controller. The room controller will operate the actuators according to current control mode and settings. This will manage the flow to the floor loops in the room and adjust the room temperature. Once the set temperature is reached, this information is sent to the room controller and the demand is met.

Actuator management

Actuator management prevents too many actuators to be open at the same time in order to reduce the peak power need. Peak current can be reduced by delaying the opening of some actuators, as they use most current while being opened.

Up to eight actuators in up to six rooms can be opened at the same time. Additional actuators are queued and opened in order.

Autobalancing

Note

Autobalancing can be used in combination with hydronic balancing.

The Uponor Smatrix room controller can operate the actuator outputs by either on/off signals or by Autobalancing (on by default), using pulse width modulation (PWM) signals.

Autobalancing is a function where the system calculates the actual energy need of single rooms and adapts the output power of each loop to its length. This means a short loop might get 20% on time while a long loop might get about 60%.

The automatic balancing continues through the seasons and throughout the household's changing lifestyle and usage patterns, removing the need of manual balancing.

This gives more even floor temperatures and faster system reaction times with lower energy consumption than any standard on/off system.

Comfort and ECO modes

Note

- Connecting external Comfort/ECO switch to the system (public thermostat system device, or GPI), disables Forced ECO in the Uponor Smatrix PULSE app.
-

Using the communication module and Uponor Smatrix PULSE app, or an external switch (connected to the GPI or public thermostat), it is possible to regulate the temperature setpoint modes between two different temperatures. Available modes are **Comfort** and **ECO** (economy).

Switching between the Comfort/ECO modes can automatically be scheduled by connecting the communication module to Uponor cloud services. Scheduling in systems without a communication module requires a programmable thermostat, but it can only schedule Comfort/ECO in the room where it is registered.

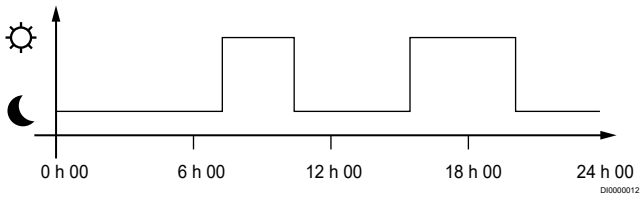

The diagram shows that the system delivers heating in comfort mode in the morning and afternoon, but the system enters ECO mode during night and in the middle of the day, when the house normally is empty.

Cooling function

The room controller operates the underfloor cooling installation according to customer needs. Temperatures can be adjusted with thermostats located in each room, or if installed with the Uponor Smatrix PULSE app (requires communication module).

As soon as the temperature measured at a thermostat is higher than the setpoint temperature, a demand to change the room temperature is created and sent to the room controller. The room controller will open the actuators according to current operating mode and other settings. Once the set temperature is reached, this information is sent and the actuators are closed.

Uponor Smatrix PULSE app (requires communication module)

The system supports different types of cooling methods and is setup in the Uponor Smatrix PULSE app.

Available cooling methods in the Uponor Smatrix PULSE app.

- Underfloor cooling (UC)

  Cooling in the system is achieved using underfloor loops.
- Fancoil (FC)

  Cooling in the system is achieved using fancoils (connected to a relay module registered to a room thermostat).

  Note! Autobalancing (Installer settings) should be disabled in the system.

  In rooms where underfloor cooling is allowed and a fancoil is installed, underfloor cooling is started when the room temperature is a couple of degrees above setpoint (1st stage), and the fancoil is started at setpoint (2nd stage cooling).
- Ceiling cooling (CC)

  Cooling in the system is achieved using ceiling cooling (2-pipe or 4-pipe system).

  Select if the system utilizes a 2-pipe or 4-pipe delivery solution for heating/cooling.

  - 2-pipe means one supply temperature to the system at a time (heating or cooling).

    *Autoblancing disabled:*In rooms where underfloor heating/cooling is allowed. Underfloor cooling and ceiling cooling is both started when the room termperature is about 1 degree above setpoint.

    Autobalancing enabled: Ceiling cooling and underfloor cooling will follow the current cooling demand.
  - 4-pipe means separate independent heating/cooling sources.

    In heating mode:

    The underfloor loops are used when there is a heating demand. Ceiling cooling is used when there is a cooling demand.

    In cooling mode:

    Underfloor loops and ceiling cooling are used at the same time when there is a cooling demand.

See Uponor Smatrix PULSE app for more information about the individual functions.

Time delayed second stage cooling with relay module (requires communication module)

Using the relay module (A3801263), and a digital thermostat, an optional second cooling stage can be connected to the Wave controller.

Using one of the relays, activation of the second cooling stage is delayed either 30 minutes (relay 1) or 90 minutes (relay 2).

The relay module is registered to thermostat via singe channel integration (thermostat settings menu 9). See *Register relay module to thermostat, Page 69* for more information.

Electrical underfloor heating

The Uponor Smatrix room controller can operate electrical underfloor heating (Uponor Comfort-E) using the actuator outputs.

The electrical underfloor heating mat/wire must be connected to the controller via a relay (dimensioned for the correct load), because of 24V AC controller output.

Fancoils

Caution!

Uponor recommends connecting no more than 4 fancoils per room controller to maintain the regulating performance.

Caution!

In rooms with a fan coil or AC unit, make sure that an actuator is not connected to the first room channel, as that channel is used to control the fan coil.

The relay module can be used to control fan coils or furnace, AC combinations in a room.

The fan coil is connected to a relay module which is registered to a room thermostat channel, and is operated depending on settings in the app (requires communication module). When selecting fan coil in the cooling setting in the app, select the first room channel to where the thermostat is registered.

Heating/cooling offset

Uponor uses an offset temperature to adjust the setpoints when switching between heating and cooling. This improves the performance of the system and reduces the need of manual setpoint adjustments when switching between heating and cooling.

The offset is 2 °C and is used to increase the setpoints when switching to cooling. When switching back to heating, the value is used to reduce the setpoint.

Heating fallback

If the connection to a thermostat is lost, the corresponding loop cannot be regulated using the room temperature. The room controller then activates a fallback function for the affected loop and the actuators are operated with a set interval.

The function is activated until the thermostat is reconnected.

Low hysteresis temperature

Uponor uses a low hysteresis temperature for best performance of the system. It is used for high control accuracy by deciding when to start and stop heating and cooling, based on information from sensors and setpoint values.

Pump management (requires communication module)

Caution!

Changing status of the pump management and/or cooling allowed (in the Uponor Smatrix app, requires communication module) will set all relays to **Not configured**. Which will have to be configured again.

Note

In systems with multiple room controllers (master/sub configuration), all relays are initially set to **Not configured**. Which will have to be configured during installation.

Each room controller has a pump relay, to which one circulation pump can be connected. Default operating mode of the circulation pump is set to Individual mode. Use the Uponor Smatrix PULSE app (requires communication module) to change the setting if needed. Available settings are **Not configured**, **Common** and **Individual**.

Common mode:

Relay function is set on a system wide basis. One circulation pump per system is connected (to the master room controller only). When there is a demand somewhere in the system, the main pump is started.

Individual mode:

Relay function is set on a room controller basis. One circulation pump per room controller is connected. When there is a demand to a specific room controller, only the circulation pump connected to that room controller is started.

Relay module (optional):

When using relay module (A3801263) to control a pump, the mode of the pump control is set through in the Uponor Smatrix PULSE app (requires communication module).

Relative humidity function

Note

RH control is activated in the Uponor Smatrix PULSE app (requires communication module).

To avoid condensation when having a cooling system, it is recommended measuring the relative humidity (RH) in the rooms. The relative humidity is measured with one or more thermostats (with RH sensor).

Cooling is shut off on a per room basis when the relative humidity limit is reached (set in the Uponor Smatrix PULSE app, default 75%). If a dehumidifier is installed, one per room controller, it will be activated when the dehumidifier start limit is reached.

Cooling will start again and the dehumidifier is deactivated when the relative humidity falls below a hysteresis set in the Uponor Smatrix PULSE app (“Deadzone”, default 5%).

Room bypass (requires communication module)

The system can use up to two rooms (per room controller), when in heating mode, as bypass to maintain minimum flow in the system.

Rooms can be selected manually or by using the Time limit room bypass function.

Time limit room bypass

The time limit room bypass function prevents shorter run times than 30 minutes in the system. It does this by analyzing system data (if a room is close to a demand, setpoints, room temperatures etc) and chooses suitable rooms to use as bypass.

System clock

To facilitate accurate log data, scheduling and different timer settings, the room controller receives the correct time and date from one of the input devices (communication module connected to Uponor cloud services, programmable thermostat etc). The clock can be set to automatically switch between summer and winter time (communication module connected to Uponor cloud services only).

4 Install Uponor Smatrix Wave PULSE

4.1 Installation procedure

Uponor recommends following the process described below to guarantee the best possible installation results.

1. *Prepare for installation, Page 16*
2. *Install Uponor Smatrix Wave PULSE room controller, Page 21*
3. Install antenna or communication module (contains an antenna).
   - *Install room controller antenna, Page 23*
   - *Install communication module, Page 24*
4. *Connect optional expansion module, Page 22*
5. *Install Uponor Smatrix Wave room thermostat, Page 34*
6. *Finishing installation, Page 74*

4.2 Prepare for installation

- Verify the contents of the package with the packing list.
- Study the wiring diagram in the installation and operation manual or inside the room controller cover.

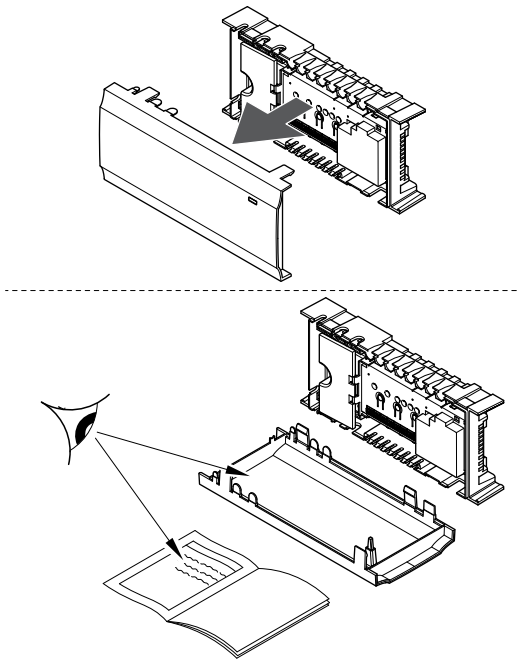

- Ensure that the room controller can be installed close to the manifold. Note that each manifold must have its own room controller.
- Ensure that the room controller can be mounted close to a 115 V AC wall outlet, or if required by local regulations, to a junction box, connected to the mains power.
- Ensure that installed Uponor Smatrix components are protected from running or dripping water.

4.3 Installation example

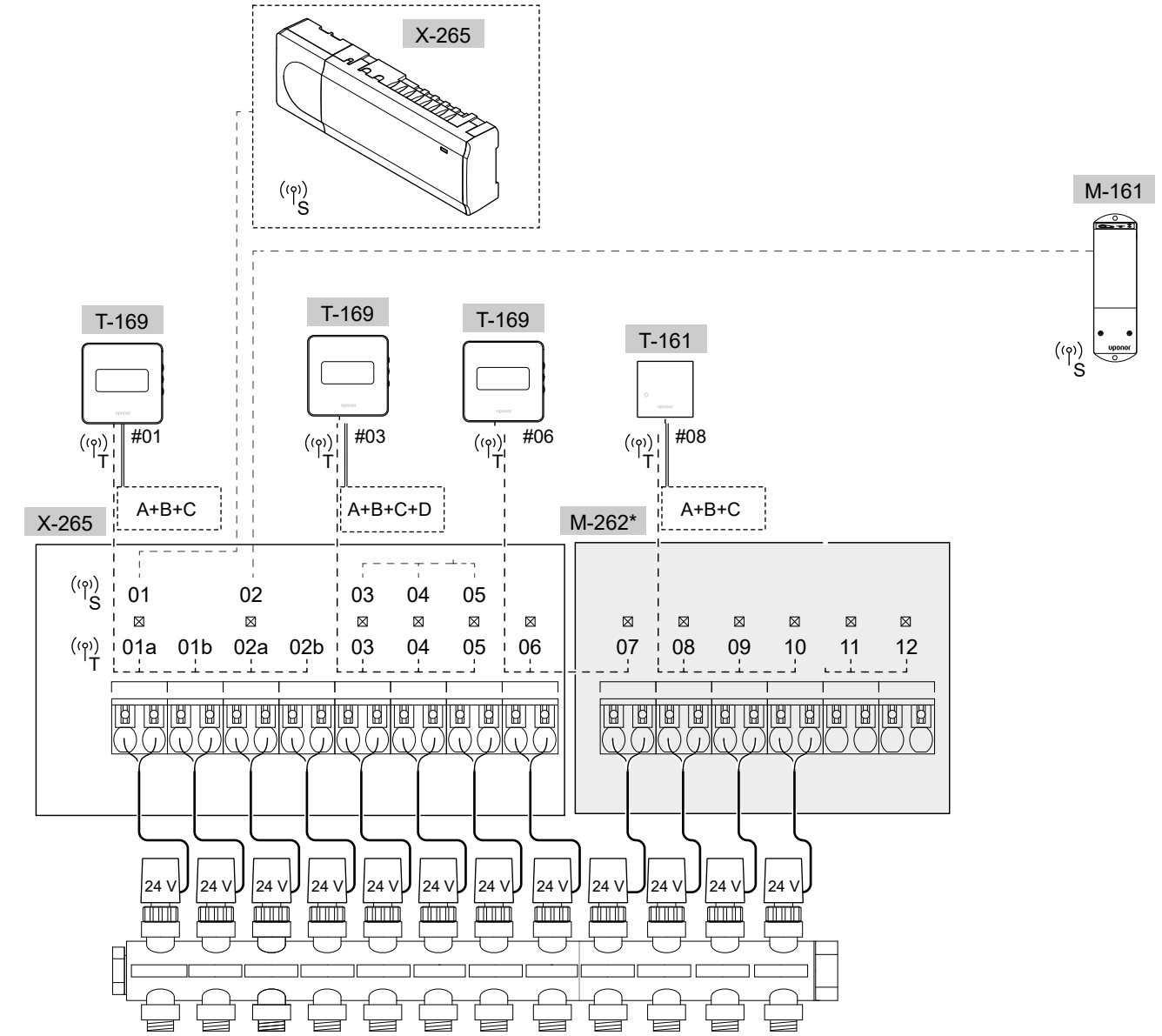

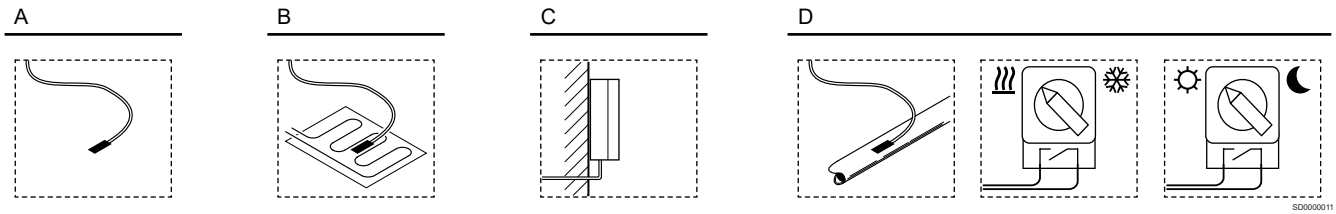

*) This example contains optional accessories which adds six actuator outputs (expansion module M-160) to the Uponor Smatrix Wave PULSE room

Caution!

Only 24 V Uponor actuators are compatible with the room controller.

See *Wiring diagram, Page 115*, for more information

Uponor Smatrix Wave PULSE system

Note

Setting up a system with a communication module requires a mobile device (smart phone/tablet).

A connection example of Uponor Smatrix Wave PULSE room controller (six channels) with an optional Uponor Smatrix Wave PULSE expansion Module (six extra channels) using system devices (S) and thermostats (T) as shown in figure.

The installation will work in a standard way with the thermostats regulating each room according to their set temperatures.

Thermostats and actuators

- Thermostat #01 controls actuator channels 01a, 01b, 02a and 02b with the help of an option.
- Thermostat #03 controls actuator channels 03 to 05 with the help of an option.
- Thermostat #06 controls actuator channels 06 and 07.
- Thermostat #08 controls actuator channels 08 to 10 with the help of an option.
-

System devices

Note

System devices can only be registered to the master room controller. Except the relay module which can be registered (for dehumidifier control) to both master and sub room controllers.

Note

The room controller will time out after about 10 minutes of inactivity and revert to normal operation. The timer will be reset when a button is pressed or if a device has been registered to it.

Note

Sub room controllers can only be registered to the master room controller.

Note

If a room controller has been connected to a communication module, disconnect the communication module and restore it to sub room controller state by factory reset.

Existing sub room controllers in the system must then either, reset system device channel 01, or register to another master room controller.

- Multiple room controllers
  Multiple Uponor Smatrix room controllers can be linked together by assigning one room controller to be master and the rest to be sub room controllers.
  The master room controller is assigned by connecting it to the communication module (only one room controller can be master in the system), and it can control up to three sub room controllers. Sub room controllers are assigned when registered (in order) to the master room controller.
- Relay module M-263 with three extra output relays.

  See *Relay module, Page 11*, for more information.
-

Option A

- External temperature sensor.

Option B

- Floor temperature sensor.

Option C

- Outdoor temperature sensor.

Option D

- External temperature sensor for heating/cooling switch. This option cannot be combined with a heating/cooling switch, in the same system.
- Heating/cooling switch. This option cannot be combined with an external temperature sensor for heating/cooling switch, in the same system.
- Comfort/ECO mode switch.This option disables the Comfort/ECO option in the GPI.

Schedules

Programmable schedules can, during heating and/or cooling, switch between Comfort and ECO mode. See example below.

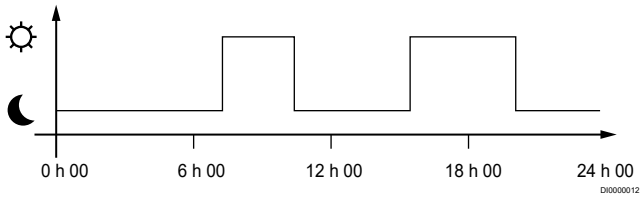

Figure 1. Schedule 1

Other rooms can, depending on system setup, simultaneously switch between Comfort and ECO mode according to their own programmed schedules.

This requires one or more of the following:

- Uponor Smatrix PULSE app (requires communication module connected to Uponor cloud services)

  The app allows for system wide, or individually programmed, schedules for the rooms in the system. Any other devices with its own programmed schedules are overridden and its menus hidden.
- Uponor Smatrix Wave T-168

  The thermostat is in control of its own room, with restrictions stated above, regarding the Uponor Smatrix PULSE.

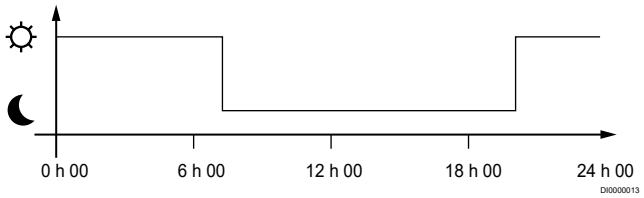

Figure 2. Schedule 2

Even if programmed schedules exist in the system, some rooms may still operate without any scheduling. These rooms will operate in constant Comfort mode and is not affected by the programming of other rooms.

Room sensor T-161:

- Set the value using the Uponor Smatrix PULSE app (requires communication module).

Digital thermostats T-169:

- Set the **ECO setback** value in menu **03** to **0**.

Heating/cooling switch

The heating/cooling switch is manually controlled through the Uponor Smatrix PULSE app (which controls the whole system), an external signal, the supply temperature, or depending on the indoor/outdoor temperature. It is used to switch the operation of the room controller between heating and cooling modes.

A single external signal (if used) can be connected to up to four Wave room controllers at the same time, working in parallel. Reducing the number of heating/cooling switches needed in the system.

Distributed manifolds or single valve

If a manifold, or a valve of a single loop, is placed too far from the room controller a relay module can be used.

1. Connect the actuator attached to the manifold to a relay module (115V from the room controller or 24V from an external power supply).
2. Register the digital thermostat to an empty channel on the Wave room controller.
3. Use thermostat settings menu 09 on the same thermostat and register it to the relay module.

The manifold is now distributed and is using the same thermostat, autobalancing, and actuator management as the Wave room controller for the selected channel.

4.4 Network connectivity

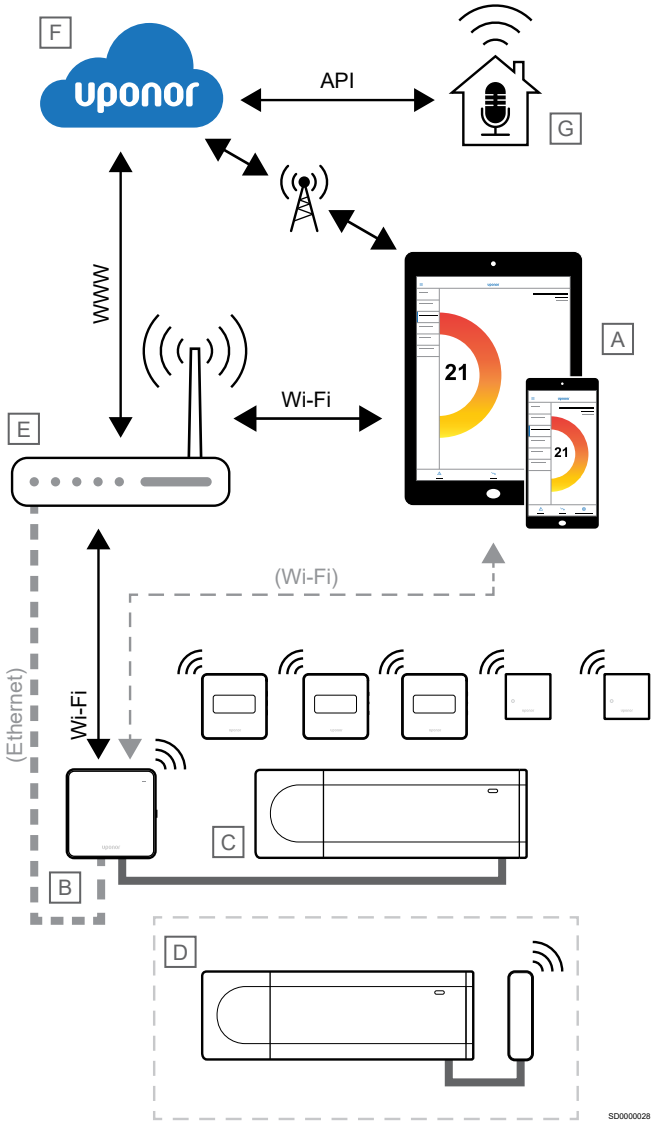

Note

Setting up a system with a communication module requires a mobile device (smart phone/tablet).

Note

API connection only supports external control.

The room controller (C) can be setup and controlled using the Uponor Smatrix PULSE app (A) and communication module (B) through different connection methods.

Direct connection

The Uponor Smatrix PULSE app (A) communicates with the room controller (C) via direct connection.

- The mobile device connects directly, using Wi-Fi, to the access point in the communication module (B).
- The sub room controller (D) communicates via the master room controller (C).

When is this method is used?

- When installing and setting up a system.
- During normal operation when there is no local Wi-Fi network available.

Local Wi-Fi connection

The Uponor Smatrix PULSE app (A) communicates with the room controller (C) via the local Wi-Fi network.

- The mobile device connects to the same Wi-Fi router (E) as the communication module (B).
- The communication module (B) and Wi-Fi router (E) are connected using either Wi-Fi or efternet.
- The sub room controller (D) communicates via the master room controller (C).

When is this method is used?

- During normal operation when connected to the same local Wi-Fi network.

Remote connection

The Uponor Smatrix PULSE app (A) communicates with the room controller (C) via a remote connection.

- The mobile device connects toUponor cloud services (F) over internet (via local Wi-Fi or mobile network).
- Uponor cloud services (F) connect to the communication module (B) via the local internet connected Wi-Fi router (E).
- The communication module (B) and Wi-Fi router (E) are connected using either Wi-Fi or efternet.
- The sub room controller (D) communicates via the master room controller (C).

When is this method is used?

- During normal operation when outside the local Wi-Fi network.
- During normal operation when connected to the same local Wi-Fi network.

API connection

Note

API connection only supports external control.

The external system (G) communicates with the room controller (C) via an Application Programming Interface (API). An external system can be a heat pump, a smart home system, or a voice control assistant etc.

- The external system (G) uses an API to communicate with Uponor cloud services (F).
- Uponor cloud services (F) connect to the communication module (B) via the local internet connected Wi-Fi router (E).
- The communication module (B) and Wi-Fi router (E) are connected using either Wi-Fi or efternet.
- The sub room controller (D) communicates via the master room controller (C).

When is this method is used?

- When external systems, such as heat pumps, smart home systems, voice control assistants etc, communicate with the Uponor Smatrix PULSE system.

5 Install Uponor Smatrix Wave PULSE room controller

5.1 Placement of room controller

Use the following guidelines when positioning the room controller:

- Position the room controller close to the manifold, just above if possible, and each manifold pair must have its own room controller. Check the position of the 115 V AC wall socket, or if required by local regulations, to a junction box, connected to the mains power.
- Check that the room controller is protected from running or dripping water.
- Check that the cover of the room controller can be easily removed.
- Check that connectors and switches are easily accessible.

See *Prepare for installation, Page 16*, for more information.

Modular placement

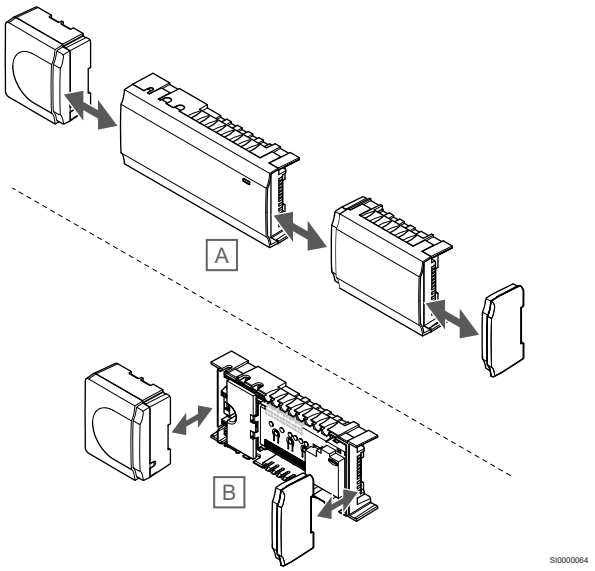

The room controller is designed with the option of modular placement in mind. This means that all major parts are detachable and can be placed separately (some extra wiring may be required depending on placement).

Attaching/detaching components

Caution!

The transformer module is heavy and might detach if the room controller is held upside down without the cover on.

Caution!

The slave module must be attached by snapping it into place due to connection pins sticking out of the module.

Note

Wires between transformer and room controller card needs to be disconnected prior to detaching the transformer.

The components can either snap on or off without the need of removing the covers (A, recommended to do on a flat surface or on a DIN-rail), or by sliding them into place when the covers are removed (B).

5.2 Connect optional expansion module

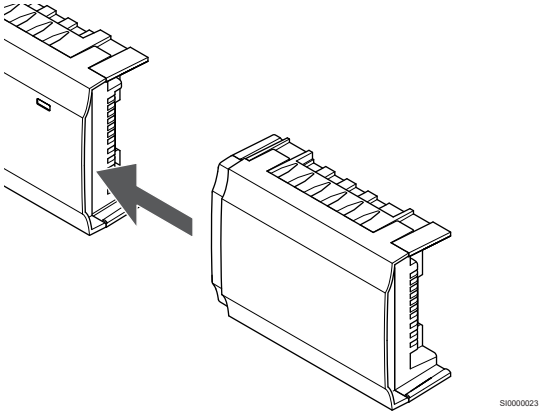

Note

Only one expansion module extension is supported per room controller.

Snap the slave module to the room controller (recommended to do this on a flat surface or on a DIN-rail).

Remove the expansion module

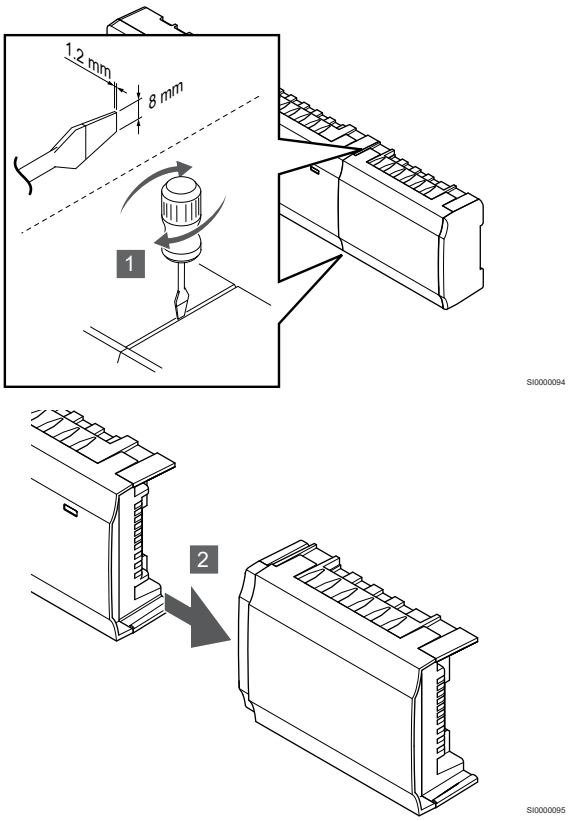

1. Place a wide flat head screwdriver in the slot between the slave module and the other unit and twist until the snap-in lock releases. Repeat for the other side.
2. Remove the expanion module. Use caution not to bend the connection pins.

5.3 Attach room controller to the wall

Attach the room controller to the wall using a DIN-rail and/or screws and wall plugs.

Using DIN rail

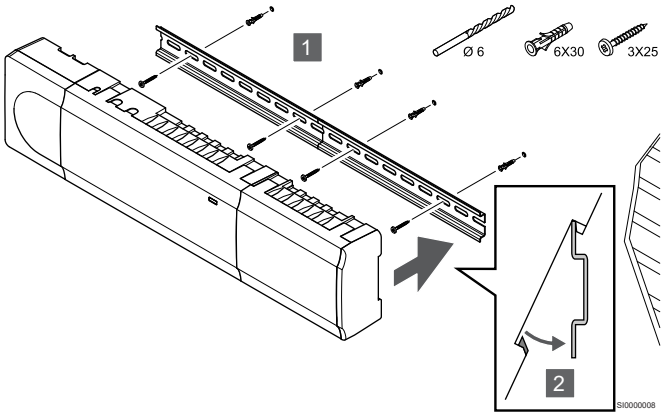

Caution!

Make sure the room controller cannot slide off the DIN rail if mounting it in any other position than horizontal.

1. Fasten the DIN rail to the wall using the screws and wall plugs.
2. Snap the room controller to the DIN rail.

Remove from DIN rail

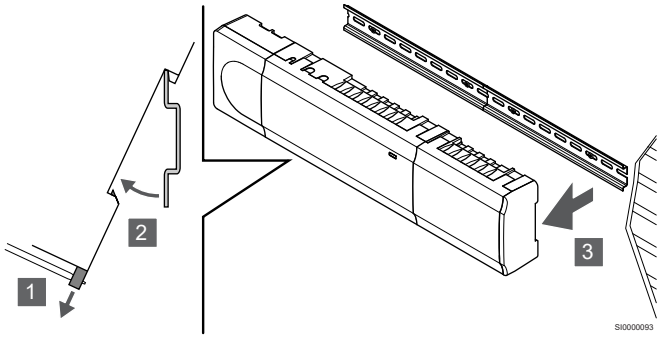

1. Use a screwdriver (or similar) and extend the plastic spring catch from the room controller.
2. Angle the room controller from the wall.
3. Remove the room controller from the DIN rail.

Using screws and wall plugs

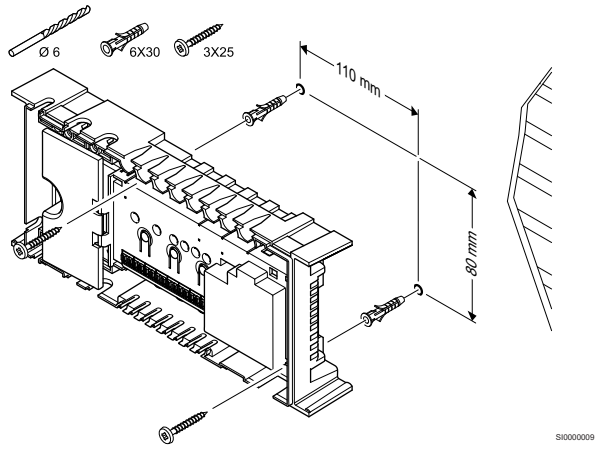

Attach the room controller to the wall using screws and wall plugs.

5.4 Install room controller antenna

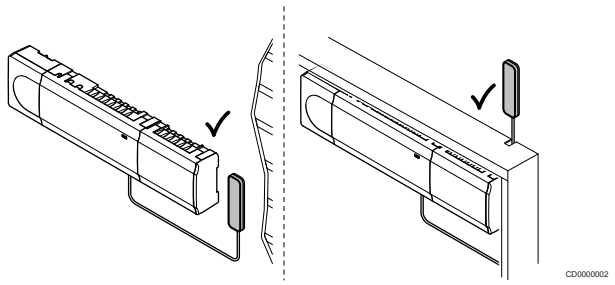

Caution!

If the room controller is installed inside a metal cabinet, the entire antenna must be placed outside the cabinet.

Caution!

The antenna must be installed vertically for best coverage.

The antenna can be attached to any surface using adhesive tape.

1. Attach antenna with adhesive tape

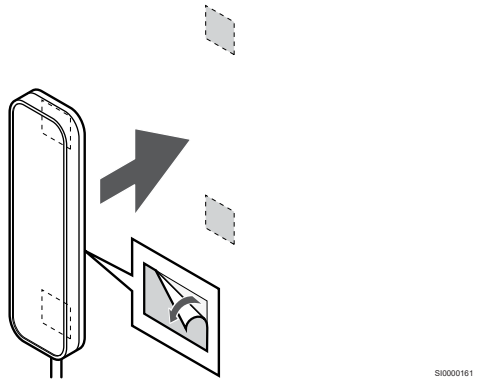

Caution!

The antenna must be installed vertically for best coverage.

Attach the antenna to the wall using double sided adhesive tape.

2. Connect the antenna cable

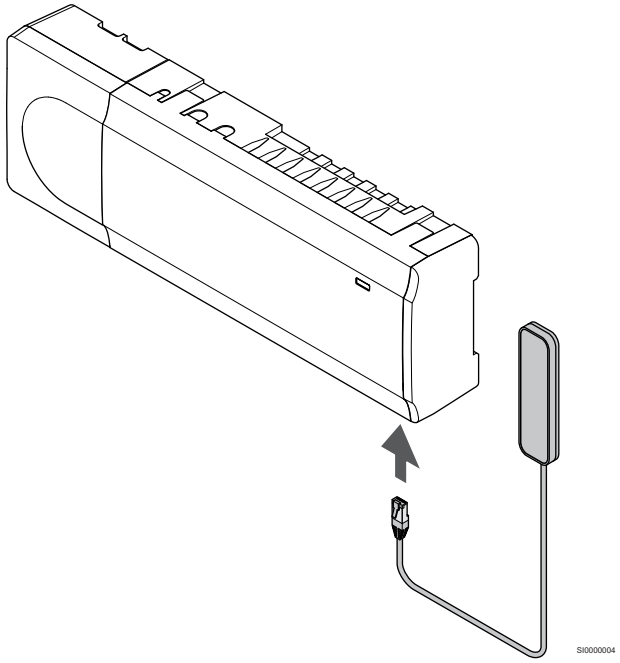

Connect the antenna to the room controller.

5.5 Install communication module

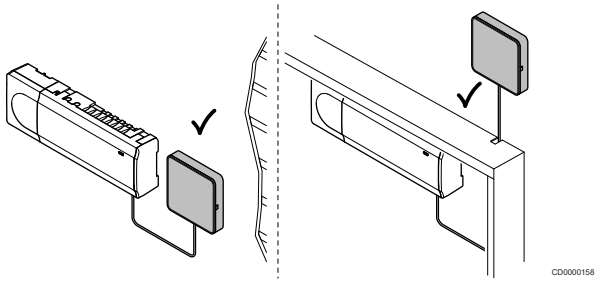

Caution!

If the room controller is installed inside a metal cabinet, the entire communication module must be placed outside the cabinet.

Caution!

The communication module must be installed vertically for best coverage.

Note

Setting up a system with a communication module requires a mobile device (smart phone/tablet).

Note

It is recommended to attach the communication module to a wall outside of the cabinet when using Wi-Fi connection.

Note

If more than one room controller is available in the system, connect the communication module to the master room controller only.

Sub room controllers can only use the room controller antenna.

The communication module contains both an antenna module (for internal communication with thermostats and such), and a local network module for Wi-Fi or ethernet communication.

1. Remove back mount

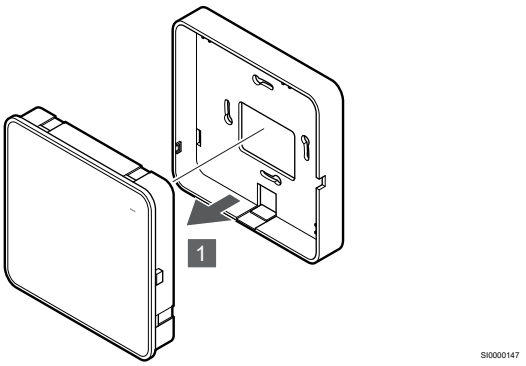

Separate the communication module from its removable back mount.

2. Attach removable back mount to the wall

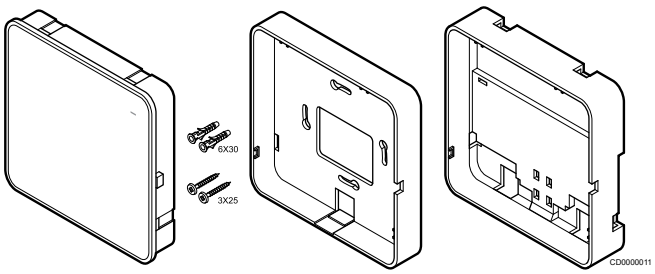

The communication module is delivered a kit with screws, wall plugs, and an optional back mount for DIN-rails, presenting several options of attaching the thermostat to the wall.

Using screws and wall plugs

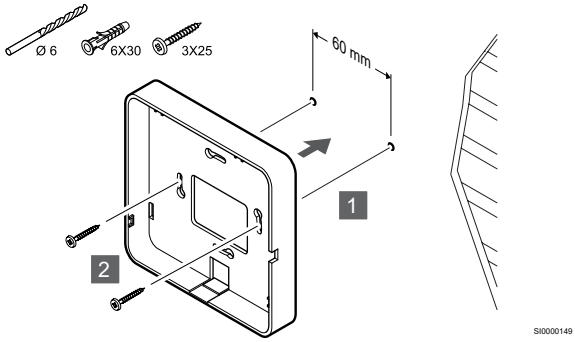

Attach the communication module back mount to the wall using the screws and wall plugs.

Using wall box

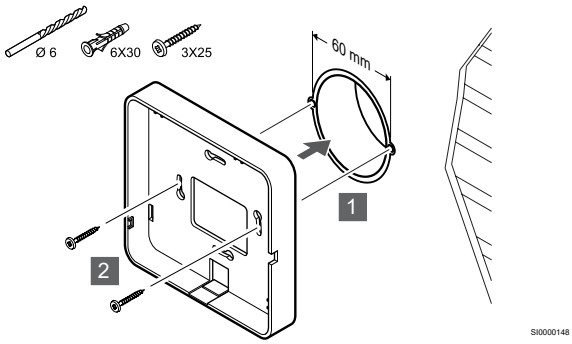

Attach the communication module back mount to the wall box.

Using adhesive tape

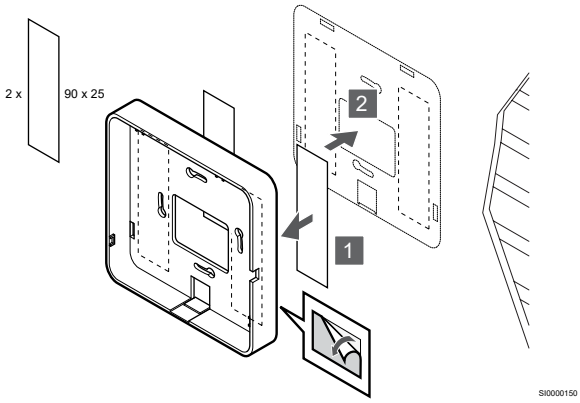

Attach the communication module back mount to the wall using adhesive tape.

Using DIN-rail

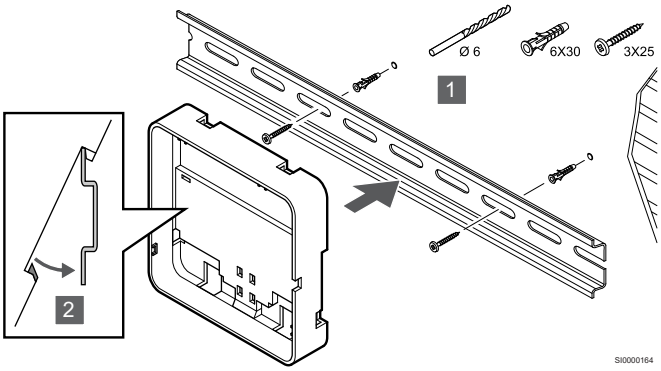

1. Fasten the DIN rail to the wall using the screws and wall plugs.
2. Snap the optional communication module DIN-rail back mount to the DIN rail.

Remove from DIN-rail

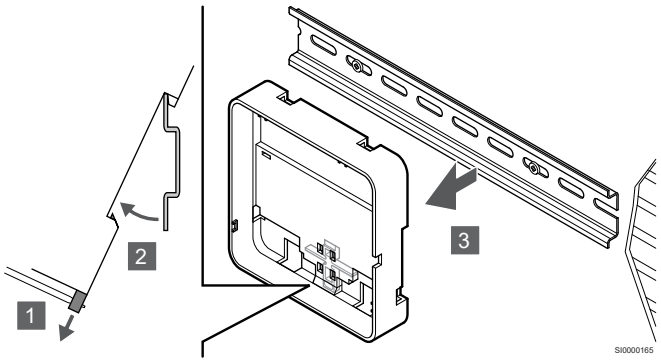

1. Use a screwdriver (or similar) and extend the springy plastic catcher from the communication module back mount.
2. Angle the communication module back mount from the wall.
3. Remove the communication module back mount from the DIN rail.

3. Route cables to communication module

The communication cable, and optional ethernet cable, is routed differently to the communication module depending on which back mount is being used.

Using standard back mount

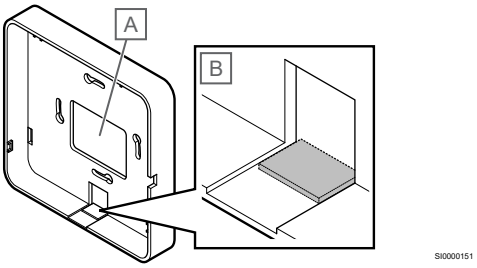

Route cables to the communication module using one of two cable entries.

A Back hole, mostly used when attached to wall box.

B Breakout plastic, mostly used when attached to a wall. Remove the breakout plastic before mounting the back mount to the wall.

Using DIN-rail back mount

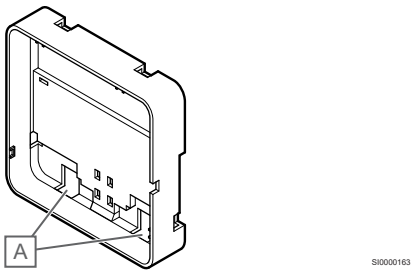

Route cables to the communication module using the cable entries (A).

4. Connect the communication cable

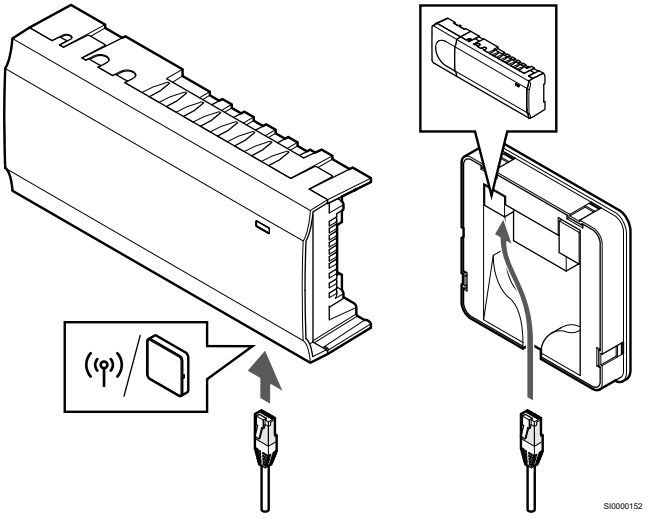

Connect the supplied communication cable to the communication module and room controller.

5. Connect the optional ethernet cable

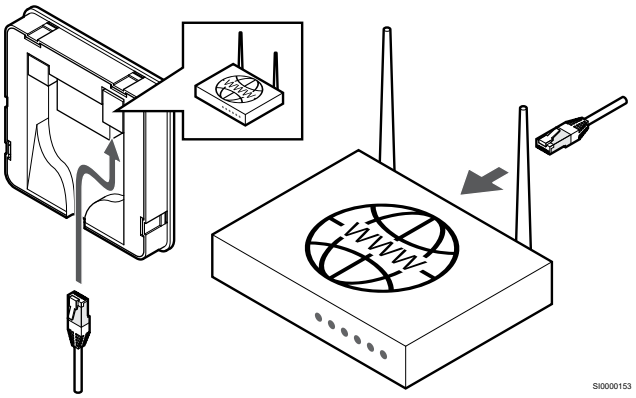

Caution!

DHCP (IP address assignment) must be activated in the router.

Connect an ethernet cable to the communication module and the router.

This option is recommended if Wi-Fi is not available, or if the communication module is placed in a location with poor Wi-Fi reception.

6. Attach communication module

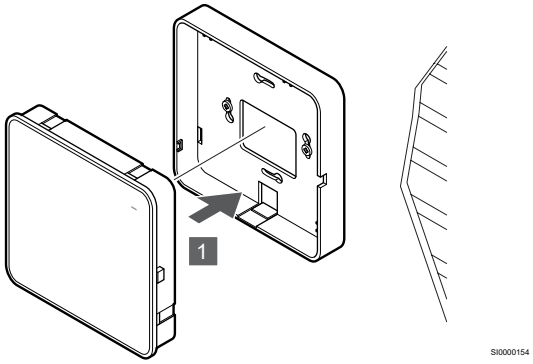

Attach the communication module to the removable back mount.

5.6 Connect actuators to room controller

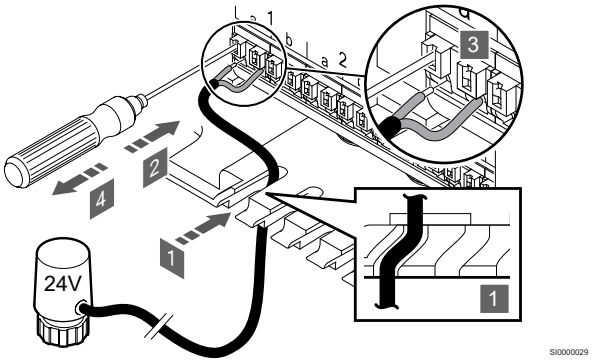

Note

Each thermostat can control one or more channels. To simplify installation and maintenance, Uponor recommends that actuators controlled by the same thermostat shall be wired in sequence to the channels.

Note

Identify the room supplied by each loop on the manifold and determine which channel it must be connected to.

1. Lead the cables from the actuators through cable entries in the bottom of the room controller frame.
2. Press the white button on the quick connector, using a thin screwdriver.
3. Insert a wire in the quick connector.
4. Remove the screwdriver.

5.7 Connect electrical underfloor heating

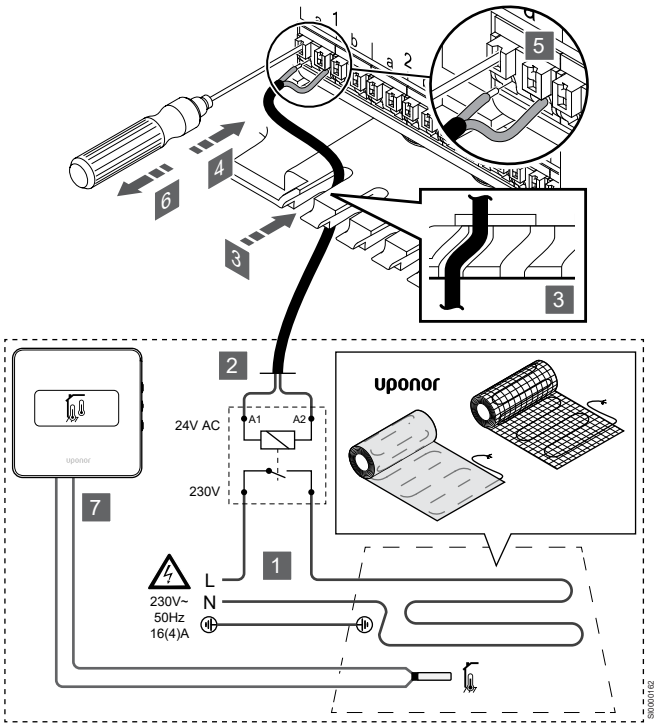

1. Connect the electrical underfloor heating mat/wire to a 24V AC relay dimensioned for the correct load.
   - Connect load and the electrical underfloor heating supply to a dry open contact.
2. Connect the 24V AC cables (to the room controller) to A1 and A2 connection terminals on the relay.
3. Lead the cables from the relay through cable entries in the bottom of the room controller frame.
4. Press the white button on the quick connector, using a thin screwdriver.
5. Insert a wire in the quick connector.
6. Remove the screwdriver.
7. Install a floor sensor to a compatible room thermostat, and set the control mode/DIP-switch.
   - Digital thermostat: "Room temperature with external floor sensor" (RFT)
   - Public thermostat: "Room temperature sensor and floor temperature sensor"

5.8 Connect input to room controller GPI

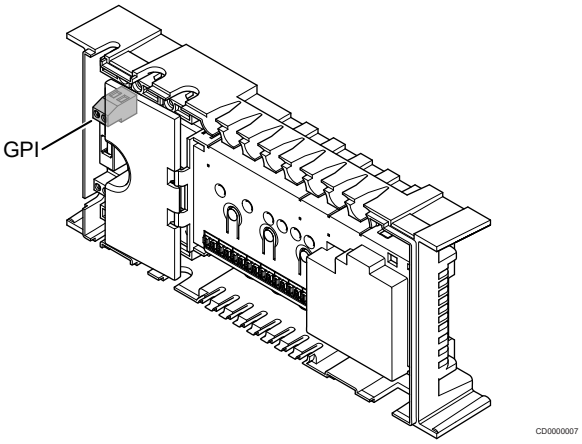

Note

If more than one room controller is available in the system, use the input on the master room controller.

The room controller is equipped with a General Purpose Input (GPI) connection terminal. Set the kind of input signal to be expected.

When the signal is closed the function is activated.

Heating/cooling switch

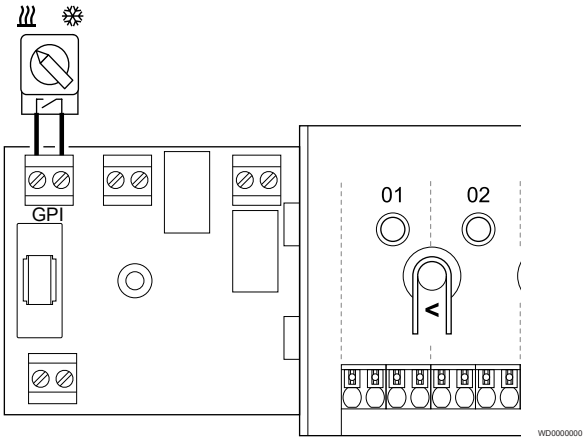

Note

In systems with a communication module installed, the function of the GPI is selected in **Installer settings** during initial configuration, or in the **System settings** menu.

1. Ensure that the power is disconnected from both the room controller and the heating/cooling switch (dry contact).
2. Route the cable to/from the heating/cooling input via a cable entry.
3. Connect the cable to the room controller connector labelled **GPI**.

Comfort/ECO switch (requires communication module)

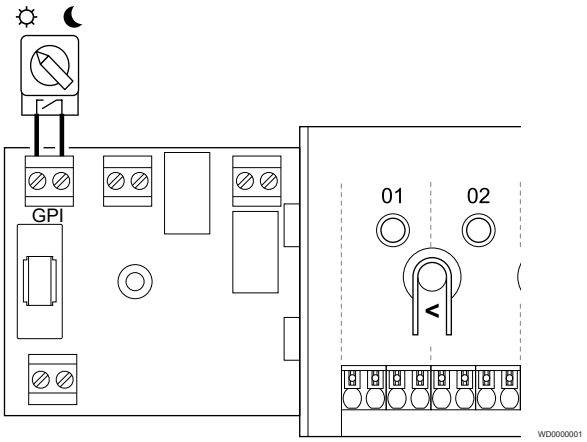

Note

In systems with a communication module installed, the function of the GPI is selected in **Installer settings** during initial configuration, or in the **System settings** menu.

Note

Use only one Comfort/ECO switch in the system.

- Connecting external Comfort/ECO switch to the system (public thermostat system device, or GPI), disables Forced ECO in the Uponor Smatrix PULSE app.
- Connecting the external Comfort/ECO switch via the public thermostat system device, disables the Comfort/ECO option in the GPI.

1. Ensure that the power is disconnected from both the room controller and the Comfort/ECO switch (dry contact).
2. Route the cable to/from the Comfort/ECO switch input via a cable entry.
3. Connect the cable to the room controller connector labelled **GPI**.

General System Alarm (requires communication module)

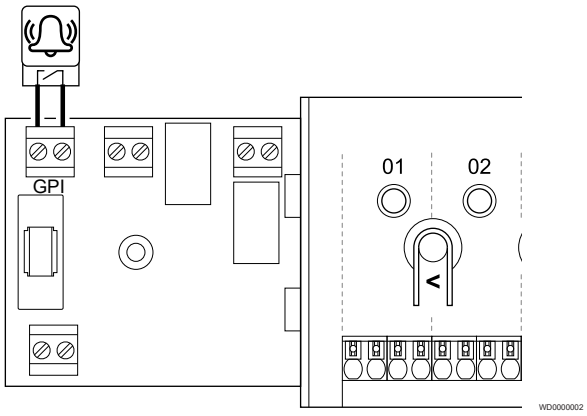

Note

In systems with a communication module installed, the function of the GPI is selected in **Installer settings** during initial configuration, or in the **System settings** menu.

1. Ensure that the power is disconnected from both the room controller and the unit to receive an alarm signal from.
2. Route the cable to/from the other unit via a cable entry.
3. Connect the cable to the room controller connector labelled **GPI**.

5.9 Connect output to room controller relays

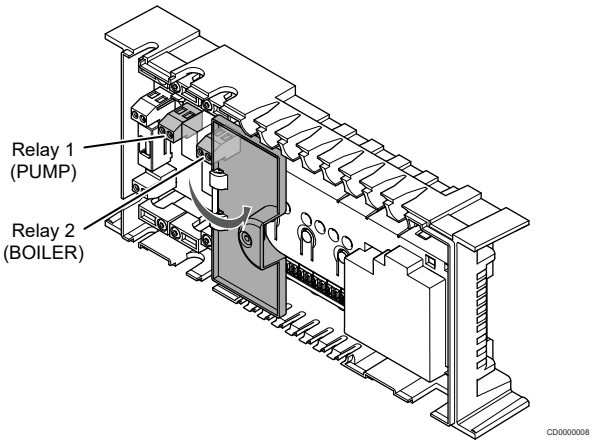

Caution!

Changing status of the pump management and/or cooling allowed (in the Uponor Smatrix app, requires communication module) will set all relays to **Not configured**. Which will have to be configured again.

Note

In systems with multiple room controllers (master/sub configuration), all relays are initially set to **Not configured**. Which will have to be configured during installation.

Note

The room controller cannot supply power for the output.

Note

The room controller uses a dry contact connection on the terminal block to control the output. When the relay closes the function is activated.

Note

The electrical circuits of the output must be protected by a circuit breaker with a maximum rating of 8 A.

The room controller has two relays which can be operated independently. A relay module can be used in installations where the distance between the device and the room controller makes wiring difficult, or if more relays are needed.

The relays on the master room controller can be set to one of the following combinations. A communication module is required to change the relay configuration from default values.

Relay 1 (PUMP)	Relay 2 (BOILER)
Circulation pump (default)[1)]	Boiler (default)
Circulation pump[1)]	H/C Switch[3)]
Circulation pump[1)]	Dehumidifier[5)]
Chiller[1)3)]	Boiler
Circulation pump[1)]	Comfort/ECO[6)]
Not configured	Not configured

The relays on the sub room controller can be set to one of the following combinations. A communication module is required for configuration.

Relay 1 (PUMP)	Relay 2 (BOILER)
Circulation pump[2)]	H/C Switch[4)]
Circulation pump[2)]	Dehumidifier[5)]
Not configured	Not configured

1) Function only available when Pump management is set to Individual or Common.

2) Function only available when Pump management is set to Individual, otherwise "Not used" is shown in the Uponor Smatrix PULSE app.

3) Function only available when cooling is activated.

4) Function only available when cooling is activated, otherwise "Not used" is shown in the Uponor Smatrix PULSE app.

5) Function only available during relative humidity control (in cooling, no fan coils).

6) This function is also used when connecting a ventilation unit.

Circulation pump

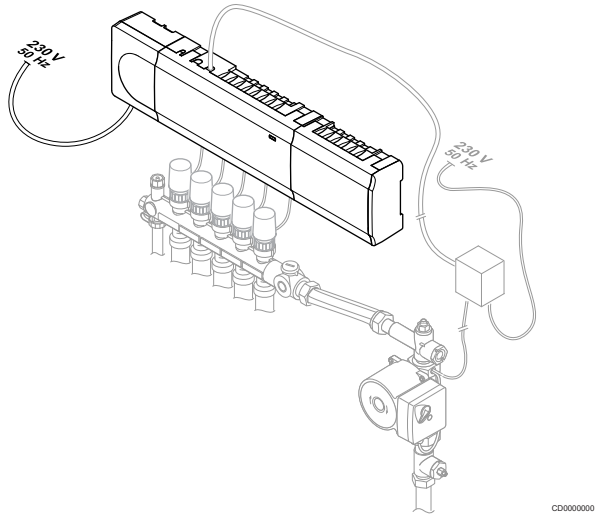

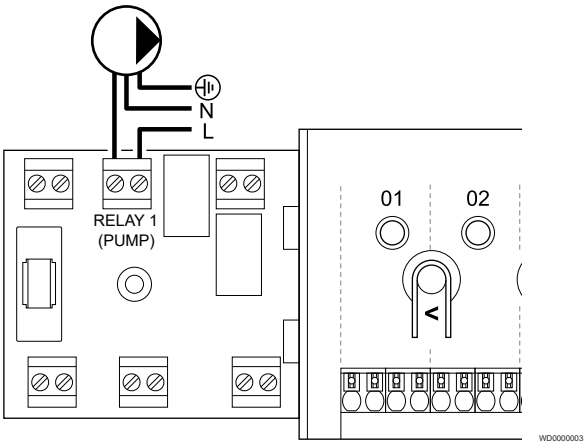

Relay function

The room controller start the circulation pump (relay closed) when there is a demand for heating or cooling.

If a communication module is connected and multiple room controllers are used the relay can be set to individual or common pump mode.

Individual pump:

Relay function is set on a room controller basis. One circulation pump per room controller is connected to relay 1. When there is a demand to a specific room controller, only the pump connected to that room controller is started.

Common pump:

Relay function is set on a system wide basis. One pump per system is connected (to the master room controller relay 1 only). When there is a demand somewhere in the system, the main pump is started.

When set to Common, the circulation pump relay can be used for other functions on the sub room controller. See room controller relays for more information.

Note

See the documentation from the circulation pump supplier as well as relevant Uponor wiring diagrams before connecting the pump.

Note

There is no power in the room controller to supply the pump. The connector in the room controller provides only a dry contact to switch off and on the power connection to the pump.

1. Ensure that the power is disconnected from both the room controller and the circulation pump.
2. Remove the screw and open the cover for the optional connections compartment.
3. Route the cable to/from the pump relay via a cable entry.
4. Connect the wires to/from the pump relay via the connection labelled **Relay 1 (PUMP)**.
5. Secure the pump cable with a cable clamp in the enclosure.
6. Close and secure the lid to the optional connections compartment.

Boiler

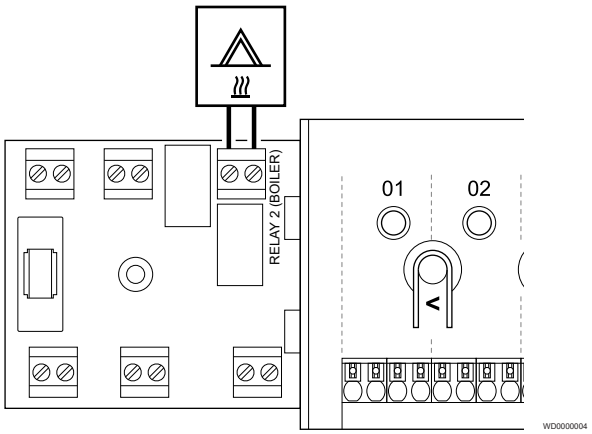

Note

This connection requires a dry contact sensing input in the boiler.

Note

There is no power in the room controller to supply the boiler. The boiler connector in the room controller provides only a dry contact to switch on and off the power connection to the boiler.

1. Ensure that the power is disconnected from both the room controller and the boiler.
2. Remove the screw and open the cover for the optional connections compartment.
3. Route the cable from/to the boiler via a cable entry.
4. Connect the boiler to the connection labelled **Relay 2 (BOILER)**.
5. Secure the cable to/from the boiler with a cable clamp in the enclosure.
6. Close and secure the lid to the optional connections compartment.

Relay function

The boiler relay can be used to send a signal to either fire the heat source, or to power open a 2-port motorised zone valve positioned on the flow to the underfloor heating manifold. If the relay is used to power open a zone valve then, the volt free auxiliary contacts on the zone valve should be used to fire the heat source.

Alternatively, the boiler relay can be used to send a demand signal to an electrically operated water temperature room controller. The additional contacts on the water temperature controller should then be used to fire the heat source.

The boiler is activated when the relay is closed.

Heating/cooling (requires communication module)

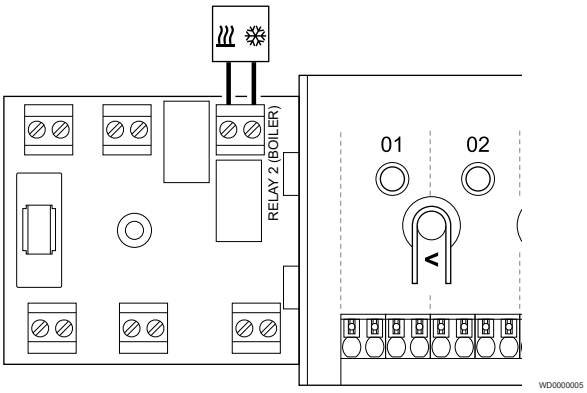

Caution!

If more than one room controller is available in the system, and the circulation pump settings in **Installer settings** is set to Common. The connector on the other room controllers can be used for heating/cooling output signal.

Note

This connection requires a dry contact sensing input in the component producing heating/cooling.

Note

This relay function requires a communication module, and must be set in **Installer settings** during initial configuration, or in the **System settings** menu.

Note

In systems with a communication module, make sure that room controller, relay 2 (Boiler), is set to **H/C Switch** in **Installer settings** and that cooling is available in the system.

1. Ensure that the power is disconnected from both the room controller and the heating/cooling relay.
2. Remove the screw and open the cover for the optional connections compartment.
3. Route the cable from/to the heating/cooling relay via a cable entry.
4. Connect the heating/cooling relay to the connection labelled **Relay 2 (BOILER)**.
5. Secure the cable to/from the heating/cooling relay with a cable clamp in the enclosure.
6. Close and secure the lid to the optional connections compartment.

Relay function

Heating is activated when the relay is open, and cooling is activated when the relay is closed.

Dehumidifier (requires communication module)

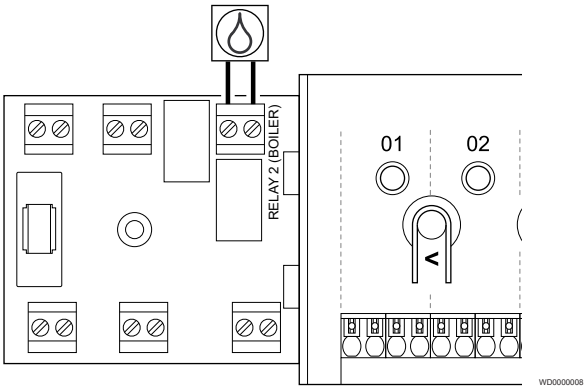

Note

This connection requires a dry contact sensing input in the dehumidifier.

Note

This relay function requires a communication module, and must be set in **Installer settings** during initial configuration, or in the **System settings** menu.

Note

In systems with a communication module, make sure that room controller, relay 2 (Boiler), is set to **Dehumidifier** in **Installer settings**.

1. Ensure that the power is disconnected from both the room controller and the dehumidifier.
2. Remove the screw and open the cover for the optional connections compartment.
3. Route the cable from/to the dehumidifier via a cable entry.
4. Connect the dehumidifier to the connection labelled **Relay 2 (BOILER)**.
5. Secure the cable to/from the dehumidifier with a cable clamp in the enclosure.
6. Close and secure the lid to the optional connections compartment.

Relay function

The dehumidifier starts (relay closed) when the relative humidity setpoint is reached when in cooling mode. It will stop when the minimum run time of 30 minutes has finalized and when the relative humidity has decreased below the defined RH setpoint - differential.

Chiller (requires communication module)

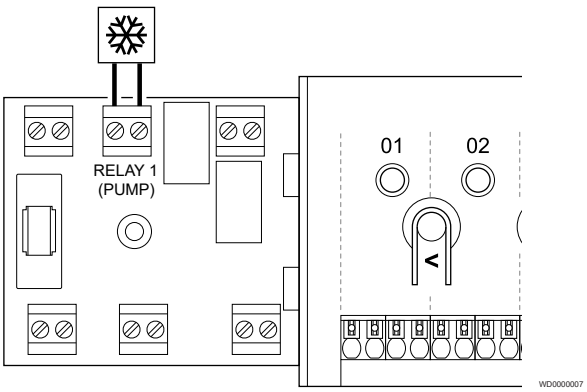

Note

This connection requires a dry contact sensing input in the chiller.

Note

This relay function requires a communication module, and must be set in **Installer settings** during initial configuration, or in the **System settings** menu.

Note

In systems with a communication module, make sure that room controller, relay 1 (Pump), is set to **Chiller** in **Installer settings**.

1. Ensure that the power is disconnected from both the room controller and the chiller.
2. Remove the screw and open the cover for the optional connections compartment.
3. Route the cable from/to the chiller via a cable entry.
4. Connect the chiller to the connection labelled **Relay 1 (PUMP)**.
5. Secure the cable to/from the chiller with a cable clamp in the enclosure.
6. Close and secure the lid to the optional connections compartment.

Relay function

The chiller starts (relay closed) when there is a cooling demand while in cooling mode. It will stop when the cooling demand is met.

Comfort/ECO (requires communication module)

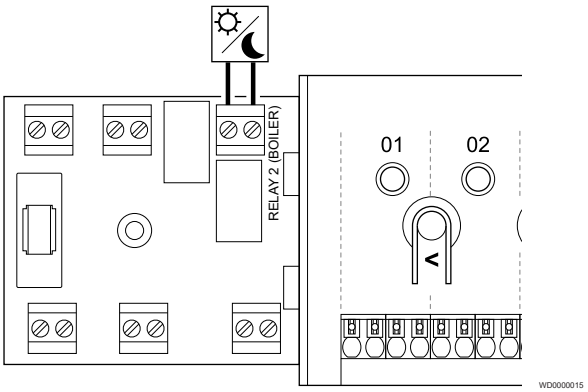

Note

This connection requires a dry contact sensing input in the other unit.

Note

This relay function requires a communication module, and must be set in **Installer settings** during initial configuration, or in the **System settings** menu.

Note

In systems with a communication module, make sure that room controller, relay 2 (Boiler), is set to **Comfort/ECO** in **Installer settings**.

1. Ensure that the power is disconnected from both the room controller and the other unit.
2. Remove the screw and open the cover for the optional connections compartment.
3. Route the cable from/to the other unit via a cable entry.
4. Connect the other unit to the connection labelled **Relay 2 (BOILER)**.
5. Secure the cable to/from the other unit with a cable clamp in the enclosure.
6. Close and secure the lid to the optional connections compartment.

Relay function

ECO mode is activated when the relay is closed.

This function requires a communication module, and to change the setting of the relay output (**Installer settings**) to Comfort/ECO.

Ventilation (requires communication module)

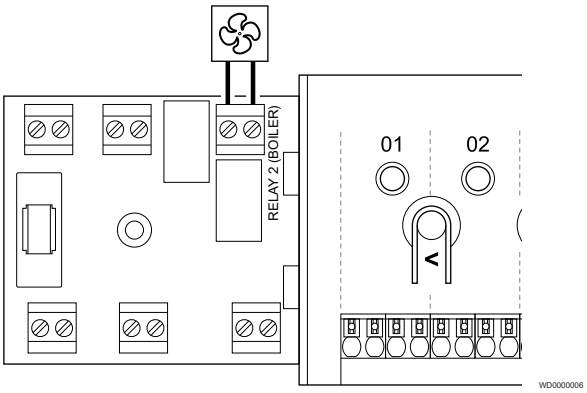

Note

This connection requires a dry contact sensing input in the ventilation unit.

Note

This relay function requires a communication module, and must be set in **Installer settings** during initial configuration, or in the **System settings** menu.

Note

In systems with a communication module, make sure that room controller, relay 2 (Boiler), is set to **Comfort/ECO** in **Installer settings**.

1. Ensure that the power is disconnected from both the room controller and the ventilation unit.
2. Remove the screw and open the cover for the optional connections compartment.
3. Route the cable from/to the ventilation unit via a cable entry.
4. Connect the ventilation unit to the connection labelled **Relay 2 (BOILER)**.
5. Secure the cable to/from the ventilation unit with a cable clamp in the enclosure.
6. Close and secure the lid to the optional connections compartment.

Relay function

The relay is closed when the Uponor Smatrix system is set to ECO. The ventilation must be setup to lower its speed when the input is closed (ECO), and to switch back when the input is opened again (Comfort).

This function requires a communication module, and to change the setting of the relay output (**Installer settings**) to Comfort/ECO.

5.10 Connect room controller to AC power

1. Check wiring

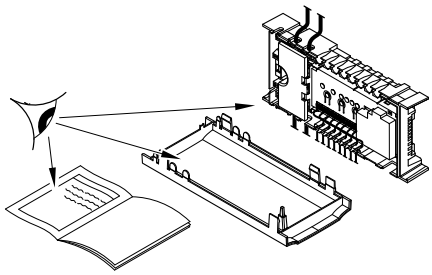

Check that all wiring is complete and correct:

- Actuators
- GPI connection (Heating/cooling switch)
- Relay connections (Circulation pump)

2. Close 115 V AC compartment

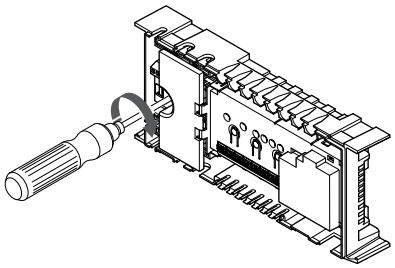

Ensure that the 115 V AC compartment of the room controller is closed and the fixing screw is tightened.

3. Power up the room controller

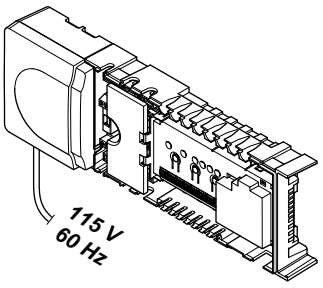

Connect the power cable and plug to a 115 V AC wall socket.

5.11 Test actuators

1. Enter forced mode

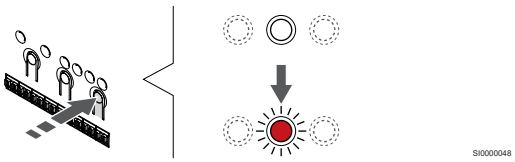

Press the **>** button, while in run mode, to enter forced mode.

The room controller is in run mode during regular operation. Otherwise press and hold the **OK** button for about 3 seconds to exit to run mode.

2. Select a channel

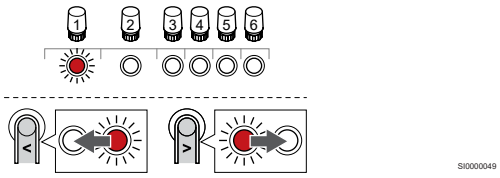

Use buttons **<** or **>** to move the pointer (LED flashes red) to a preferred channel.

3. Test channel

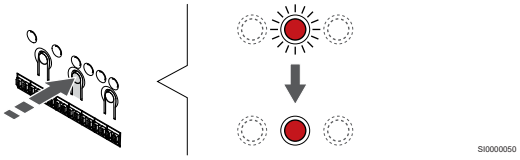

Note

To end forced operation, enter forced mode, select the active channel, and press the OK button.

Note

Testing an actuator takes about 10 minutes and the room controller automatically returns to run mode when finished.

Press the OK button to activate forced mode for the selected channel.

Channel LED	Status
Solid red	The actuator starts opening and the system exits to run mode.
Flashing red	The channel cannot be chosen for forced operation. Try again later.
Off	Actuator management may be delaying the actuator, if more than eight channels are opened at the same time.

6 Install Uponor Smatrix Wave room thermostat

6.1 Uponor Smatrix Wave T-161

Placement of thermostat

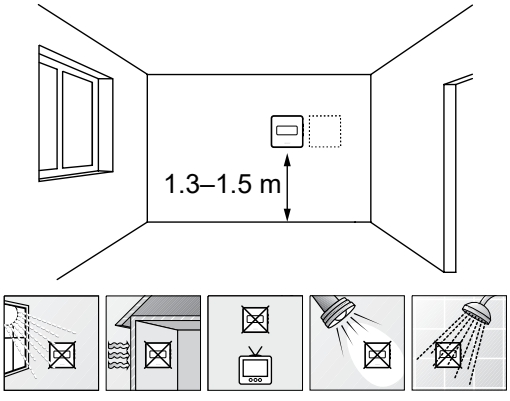

- Select an indoor wall and a position 1.3 m to 1.5 m above the floor.
- Ensure that the thermostat is away from direct sunlight.
- Ensure that the thermostat will not be heated through the wall by sunshine.
- Ensure that the thermostat is away from any source of heat, for example television set, electronic equipment, fireplace, spotlights, and so on.
- Ensure that the thermostat is away from any source of humidity and water splashes (IP20).
- Ensure that the thermostat is positioned at least 40 cm away from the room controller to avoid interference.

Label thermostat

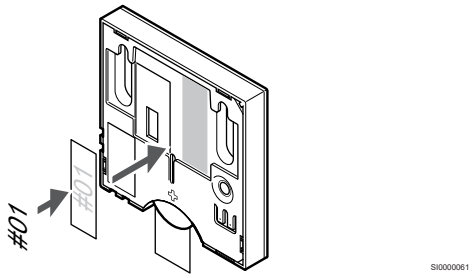

Label the thermostat, where suitable, with the channel numbers they are to control, for example, #02, #03. For a system with several room controllers, add the ID of each room controller, for example, 1.02, 1.03, 2.02, 2.03.

If an external sensor is connected, add information about sensor type when applicable.

Available thermostat and sensor combinations:

- Room temperature
- Room and floor temperature

Connect external sensor to thermostat

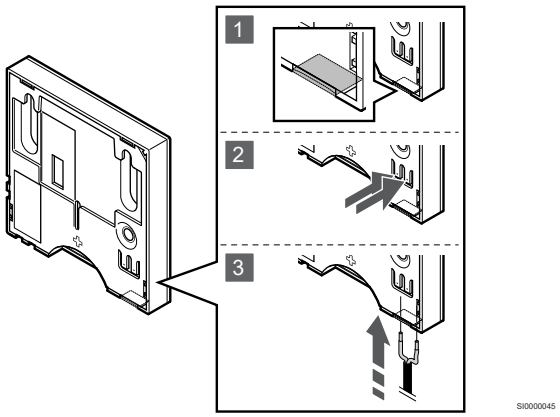

Note

For accurate temperature: attach the outdoor sensor to the north side of the building where it is unlikely to be exposed to direct sunlight. Do not place it close to doors, windows, or air outlets.

Caution!

If more than one hour has passed between startup of the thermostat, and the sensor being inserted. Remove the battery from the thermostat, wait 30 seconds and reinsert the battery again. The thermostat will now be configured with a floor sensor.

1. Remove the breakout plastic on the back of the thermostat.
2. Press the push buttons on the connection terminals.
3. While pressing the push buttons, insert the two wires from the sensor cable (non polarized) into the connection terminal.

The external temperature sensor input can be used to connect a floor temperature sensor. Thermostat control mode for the T-161 is set when a floor sensor is connected to the thermostat.

Start the thermostat

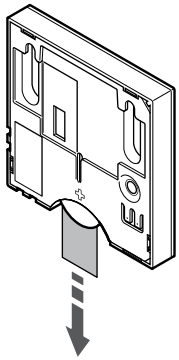

Remove the plastic transportation strip from the battery to start the thermostat.

The thermostat use a single CR2032 3V button cell lithium battery which provides about 2 years of battery life, as long as it is positioned within radio range of the room controller. Ensure that the battery is correctly inserted in the thermostat.

The thermostat will perform a self test, for about 10 seconds, when starting up. The system will be blocked for input and the thermostat LED flashes during this period.

Attach thermostat to the wall

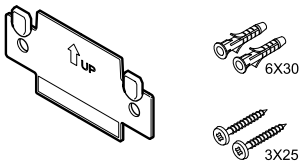

The thermostat is delivered in a kit with screws, wall plugs, and a wall bracket, presenting several options of attaching the thermostat to the wall.

Wall bracket (recommended)

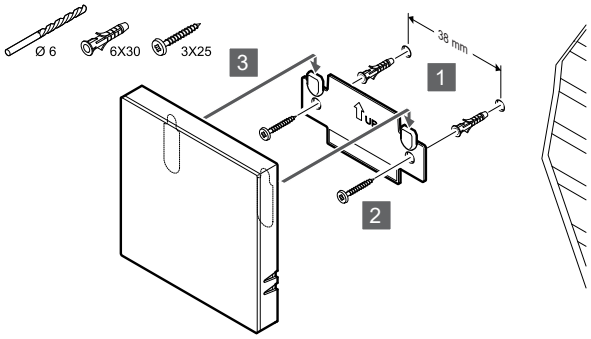

Attach the thermostat to the wall using the wall bracket, screws and wall plugs.

Screw and wall plug

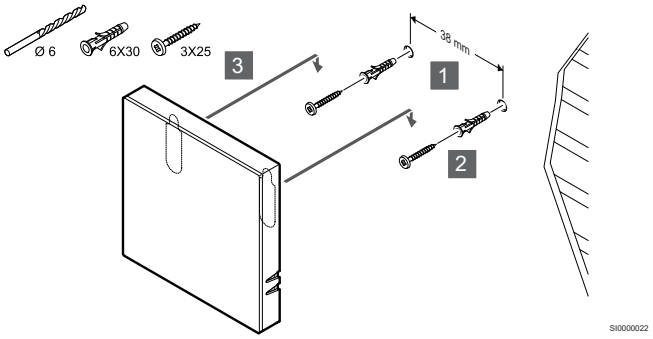

Attach the thermostat to the wall using the screw and wall plug.

Adhesive strip

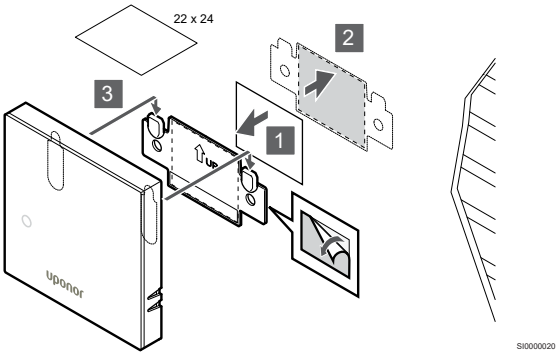

Attach the thermostat to the wall using the wall bracket and adhesive strips.

Register thermostat to room controller

1. Enter registration mode

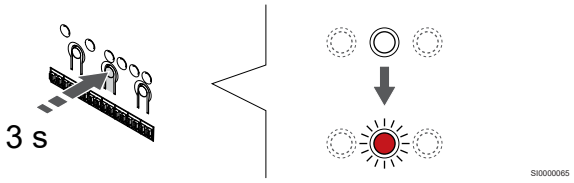

Press and hold the **OK** button on the room controller until the LED for channel 1 (or the first unregistered channel) flashes red.

2. Select a channel

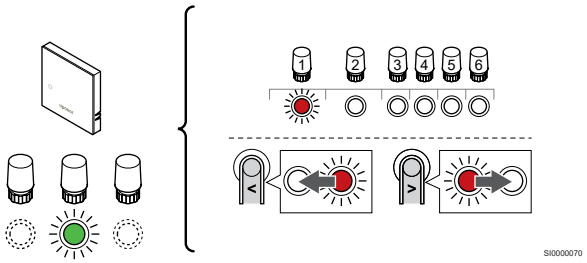

Use buttons **<** or **>** to move the pointer (LED flashes red) to a preferred channel.

3. Lock selected channel

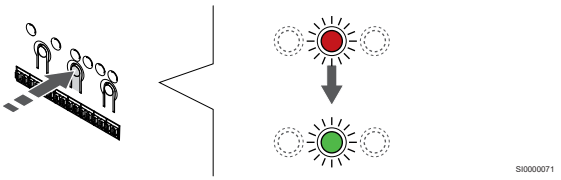

Note

It is recommended to register all channels to the thermostat at the same time.

Press the **OK** button to select the channel for registration. The LED for the selected channel starts flashing green.

Select all channels to be registered to the thermostat and continue to the next step.

4. Register thermostat

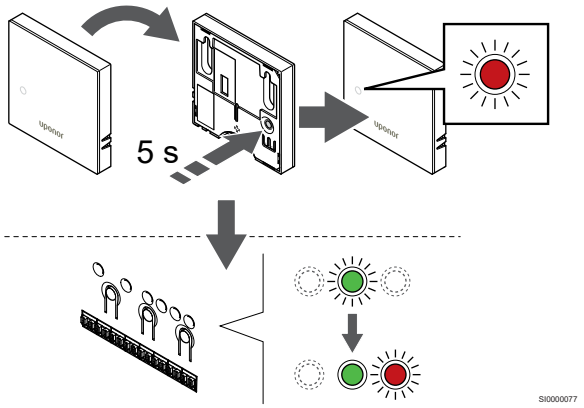

Gently press and hold the registration button on the thermostat, release when the LED on the front of the thermostat starts flashing.

The selected channel LED in the room controller turns fixed green and the registration is complete.

5. Exit registration mode

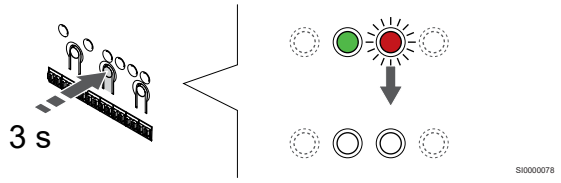

Press and hold the **OK** button on the room controller until the green LEDs turn off to end registration and return to run mode.

To unregister already registered thermostats, see *Unregister room controller channels, Page 77*.

6.2 Uponor Smatrix Wave T-169

Placement of thermostat

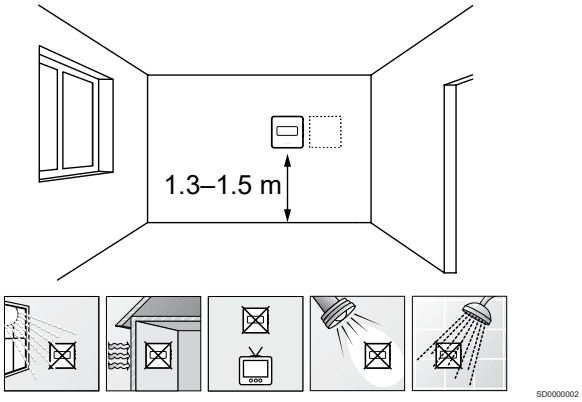

- Select an indoor wall and a position 1.3 m to 1.5 m above the floor.
- Ensure that the thermostat is away from direct sunlight.
- Ensure that the thermostat will not be heated through the wall by sunshine.
- Ensure that the thermostat is away from any source of heat, for example television set, electronic equipment, fireplace, spotlights, and so on.
- Ensure that the thermostat is away from any source of humidity and water splashes (IP20).
- Ensure that the thermostat is positioned at least 40 cm away from the room controller to avoid interference.

Label thermostat

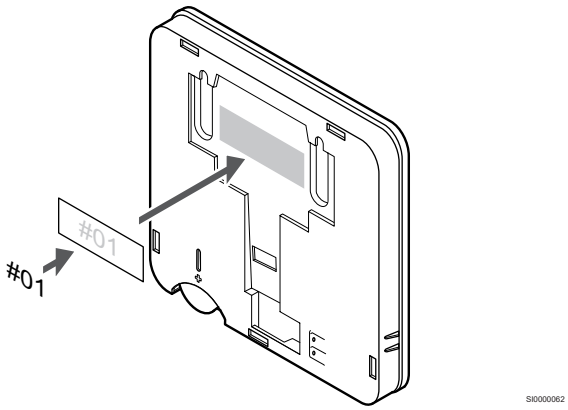

Label the thermostat, where suitable, with the channel numbers they are to control, for example, #02, #03. For a system with several room controllers, add the ID of each room controller, for example, 1.02, 1.03, 2.02, 2.03.

If an external sensor is connected, add information about sensor type when applicable.

Available thermostat and sensor combinations:

- Room temperature
- Room and floor temperature
- Room and outdoor temperature
- Remote sensor temperature

Connect external sensor to thermostat

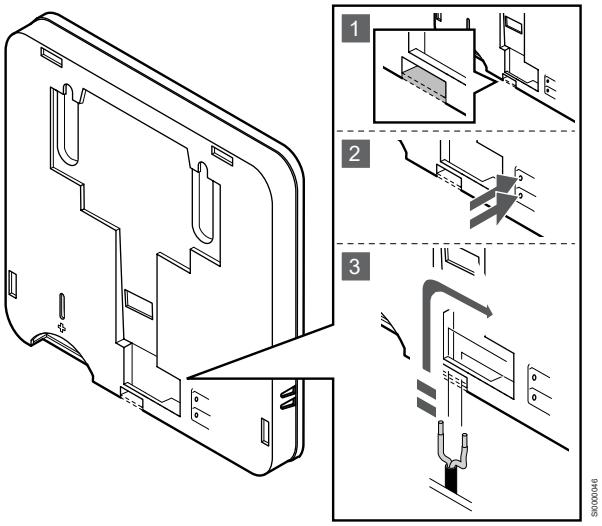

Note

For accurate temperature: attach the outdoor sensor to the north side of the building where it is unlikely to be exposed to direct sunlight. Do not place it close to doors, windows, or air outlets.

1. Remove the breakout plastic on the back of the thermostat.
2. Press the push buttons on the connection terminals.
3. While pressing the push buttons, insert the two wires from the sensor cable (non polarized) into the connection terminal.

The external temperature sensor input can be used for either a floor, outdoor or remote temperature sensor. Use the software on the thermostat to select a control mode which corresponds to the use of the sensor and thermostat.

Start the thermostat

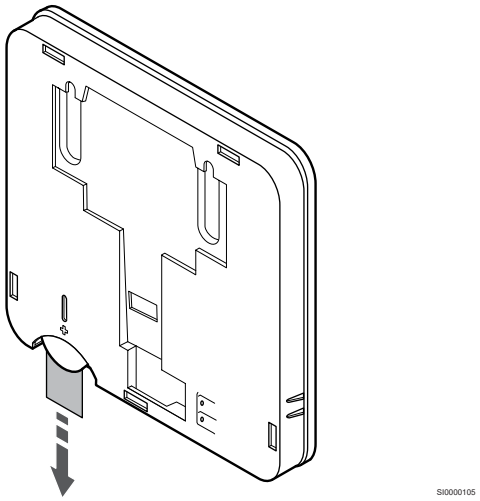

Remove the plastic transportation strip from the battery to start the thermostat.

The thermostat use a single CR2032 3V button cell lithium battery which provides about 2 years of battery life, as long as it is positioned within radio range of the room controller. Ensure that the battery is correctly inserted in the thermostat.

The thermostat will perform a self test, for about 10 seconds, when the battery have been inserted. The system will be blocked for input during this period.

Current software version is displayed during power up.

Select thermostat control mode

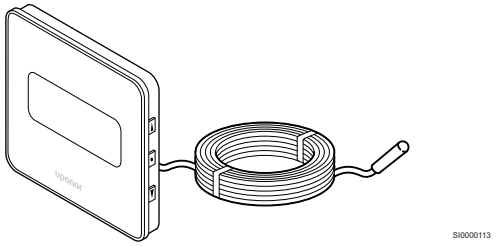

Note

If no button on the thermostat is pressed for about 8 seconds, while in a submenu, the current values will be saved and the software exits to the settings menu. About about 60 seconds later, it exits to run mode.

If an external sensor is connected to the thermostat, a control mode must be selected to accommodate the extra functionality of the sensor.

See *04 Control mode, Page 93*, for how to change the setting.

Attach thermostat to the wall

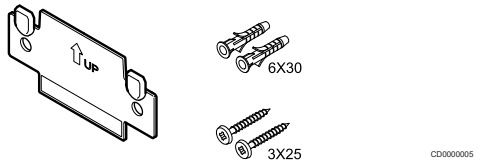

The thermostat is delivered in a kit with screws, wall plugs, and a wall bracket, presenting several options of attaching the thermostat to the wall.

Wall bracket (recommended)

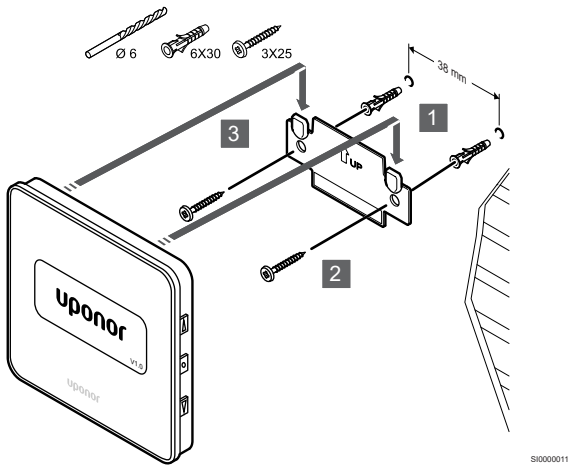

Attach the thermostat to the wall using the wall bracket, screws and wall plugs.

Screw and wall plug

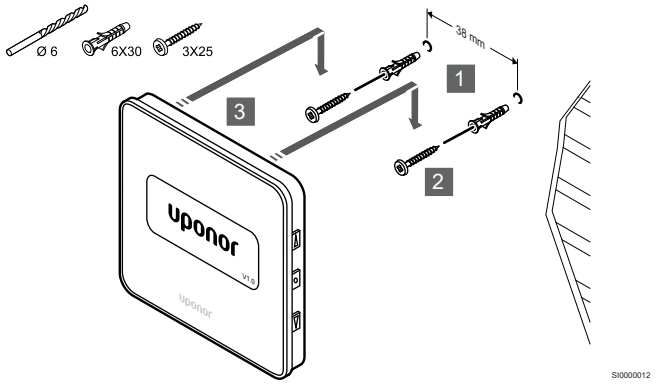

Attach the thermostat to the wall using the screw and wall plug.

Adhesive strip

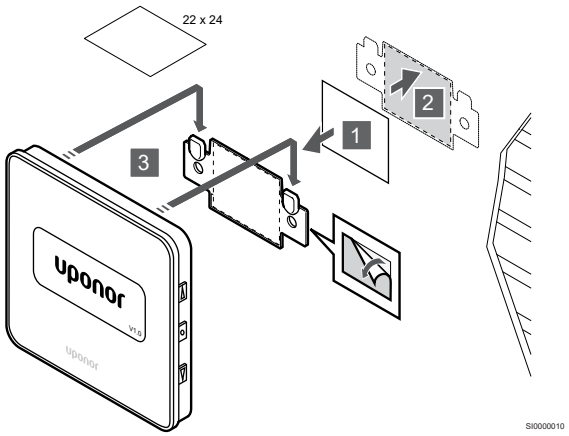

Attach the thermostat to the wall using the wall bracket and adhesive strips.

Register thermostat to room controller

1. Enter registration mode

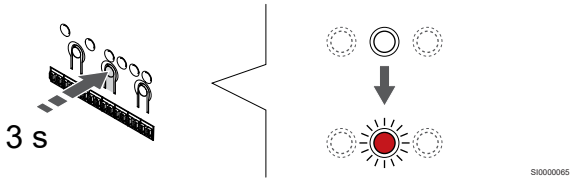

Press and hold the **OK** button on the room controller until the LED for channel 1 (or the first unregistered channel) flashes red.

2. Select a channel

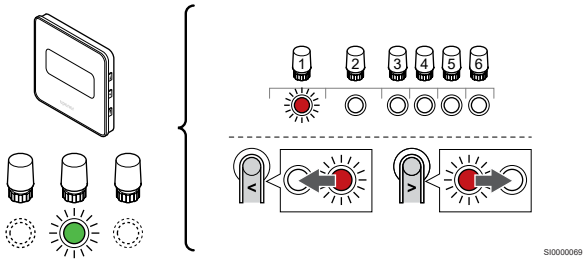

Use buttons **<** or **>** to move the pointer (LED flashes red) to a preferred channel.

3. Lock selected channel

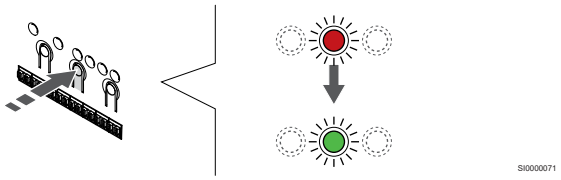

Note

It is recommended to register all channels to the thermostat at the same time.

Press the **OK** button to select the channel for registration. The LED for the selected channel starts flashing green.

Select all channels to be registered to the thermostat and continue to the next step.

4. Register thermostat

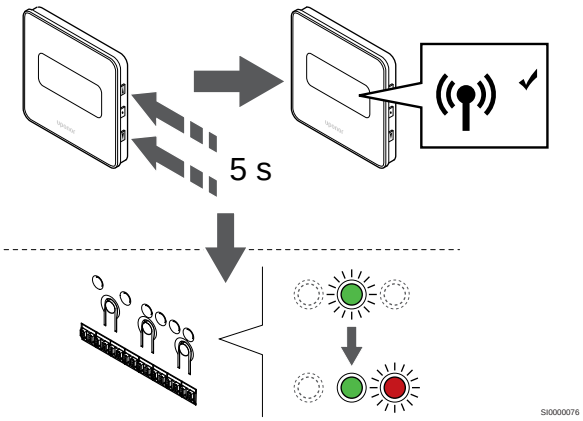

Press and hold both ▲ and ▼ buttons on the thermostat until the text **CnF** (configure) and a communication icon is displayed.

The selected channel LED in the room controller turns fixed green and the registration is complete.

5. Exit registration mode

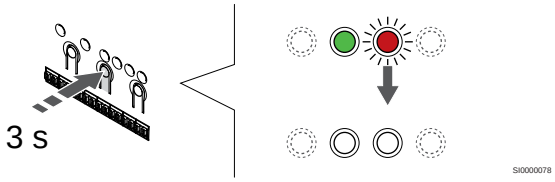

Press and hold the **OK** button on the room controller until the green LEDs turn off to end registration and return to run mode.

To unregister already registered thermostats, see *Unregister room controller channels, Page 77*.

7 Install Uponor Smatrix Wave relay module

7.1 Placement of relay module

Use the following guidelines when positioning the relay module:

- Position the relay module close to the remote component, just preferably above if possible (if water can drip from the component). Check the position of the 115 V AC power outlet, or if required by local regulations, the junction box.
- Check that the relay module is protected from running or dripping water.
- Check that the cover of the relay module can be easily removed.
- Check that connectors and switches are easily accessible.

7.2 Attach relay module to the wall

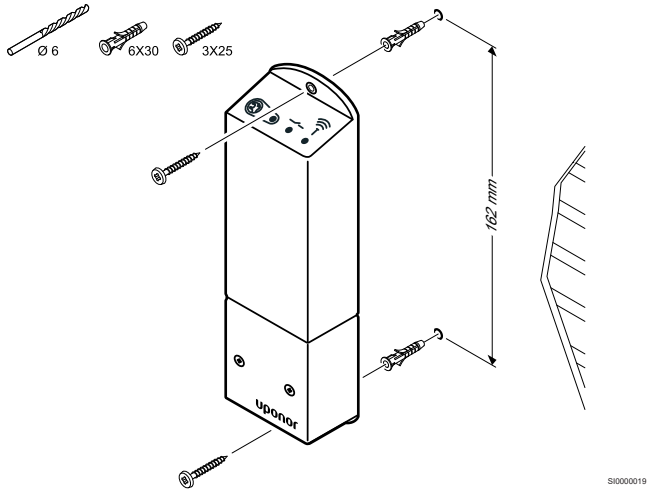

Attach the relay module to the wall using screws and wall plugs.

7.3 Connect output to relay module

The relay module adds two extra output relays to the room controller increasing the total amount of room controller output relays to four. This presents an option to control remote components (within radio range) otherwise wired to the room controller and/or up to four components by the same room controller.

If more than one room controller is available in the system, one relay module per room controller can be used. The function is set in **Installer settings** during setup (requires a communication module).

Caution!

Changing status of the pump management and/or cooling allowed (in the Uponor Smatrix app, requires communication module) will set all relays to **Not configured**. Which will have to be configured again.

Note

In systems with multiple room controllers (master/sub configuration), all relays are initially set to **Not configured**. Which will have to be configured during installation.

Note

The relay module cannot supply power for the output.

Note

The relay module uses a dry contact connection on the terminal block to control the output.

Note

The electrical circuits of the output must be protected by a circuit breaker with a maximum rating of 8 A.

Note

See the relevant component supplier documentation and Uponor wiring diagram before connecting the component.

The relay module, registered to the master room controller, can be set to one of the following combinations. A communication module is required to change the relay configuration from default values.

Relay 1 (PUMP)	Relay 2 (BOILER)
Circulation pump (default)[1)]	Boiler (default)
Circulation pump[1)]	H/C Switch[3)]
Circulation pump[1)]	Dehumidifier[5)]
Chiller[1)3)]	Boiler
Circulation pump[1)]	Comfort/ECO[6)]
Not configured	Not configured

The relay module, registered to the sub room controller, can be set to one of the following combinations. A communication module is required for configuration.

Relay 1 (PUMP)	Relay 2 (BOILER)
Circulation pump[2)]	H/C Switch[4)]
Circulation pump[2)]	Dehumidifier[5)]
Not configured	Not configured

1) Function only available when Pump management is set to Individual or Common.

2) Function only available when Pump management is set to Individual, otherwise "Not used" is shown in the Uponor Smatrix PULSE app.

3) Function only available when cooling is activated.

4) Function only available when cooling is activated, otherwise "Not used" is shown in the Uponor Smatrix PULSE app.

5) Function only available during relative humidity control (in cooling, no fan coils).

6) This function is also used when connecting a ventilation unit.

Connect circulation pump

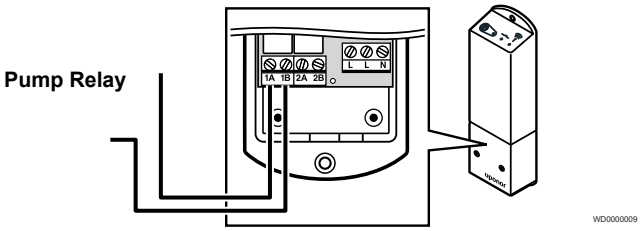

Note

In systems with a communication module, make sure that relay module, relay 1, is set to **Circulation pump** in **Installer settings**.

1. Ensure that the power is disconnected from both the relay module and the circulation pump.
2. Connect the L wire to/from the pump via the connection labelled **1A** and **1B**.

Connect boiler

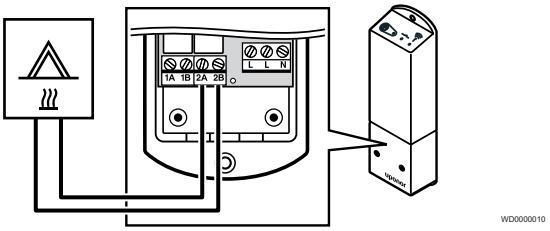

Warning!

Risk of electrical shock! Electrical installation and service behind secured 115V AC covers must be carried out under the supervision of a qualified electrician.

Note

This connection requires a dry contact sensing input in the boiler.

Note

In systems with a communication module, make sure that relay module, relay 2, is set to **Boiler** in **Installer settings**.

1. Ensure that the power is disconnected from both the relay module and the boiler.
2. Connect the cable to/from the boiler to the connector **2A** and **2B** on the relay module.

Connect heating/cooling (requires communication module)

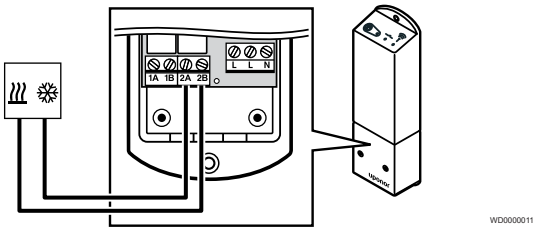

Note

This connection requires a dry contact sensing input in the component producing heating/cooling.

Note

This relay function requires a communication module, and must be set in **Installer settings** during initial configuration, or in the **System settings** menu.

Note

In systems with a communication module, make sure that relay module, relay 2, is set to **H/C Switch** in **Installer settings** and that cooling is available in the system.

1. Ensure that the power is disconnected from both the relay module and the heating/cooling relay.
2. Connect the cable to/from the component producing heating/cooling to the connector **2A** and **2B** on the relay module.

Connect dehumidifier (requires communication module)

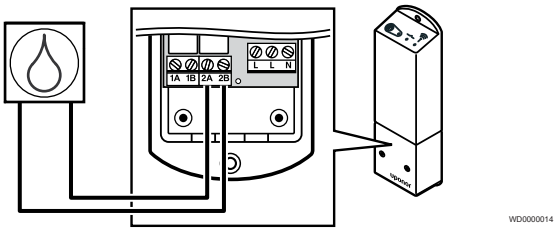

Note

This connection requires a dry contact sensing input in the dehumidifier.

Note

This relay function requires a communication module, and must be set in **Installer settings** during initial configuration, or in the **System settings** menu.

Note

In systems with a communication module, make sure that relay module, relay 2, is set to **Dehumidifier** in **Installer settings**.

The dehumidifier starts when the relative humidity setpoint is reached (when in cooling mode). It will stop when the minimum run time of 30 minutes has finalized and when the relative humidity is below the defined RH setpoint - deadzone.

1. Ensure that the power is disconnected from both the relay module and the dehumidifier.
2. Connect the cable to/from the dehumidifier to the connector **2A** and **2B** on the relay module.

Connect chiller (requires communication module)

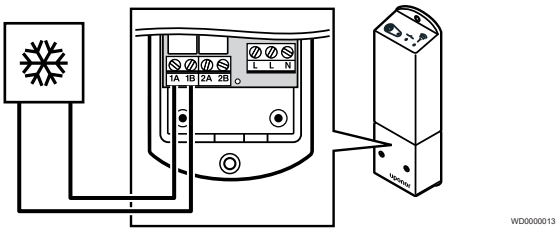

Note

This connection requires a dry contact sensing input in the chiller.

Note

This relay function requires a communication module, and must be set in **Installer settings** during initial configuration, or in the **System settings** menu.

Note

In systems with a communication module, make sure that relay module, relay 1, is set to **Chiller** in **Installer settings**.

The chiller starts when there is a cooling demand while in cooling mode. It will stop when the cooling demand is met.

1. Ensure that the power is disconnected from both the relay module and the chiller.
2. Connect the cable to/from the chiller to the connector **1A** and **1B** on the relay module.

Connect Comfort/ECO (requires communication module)

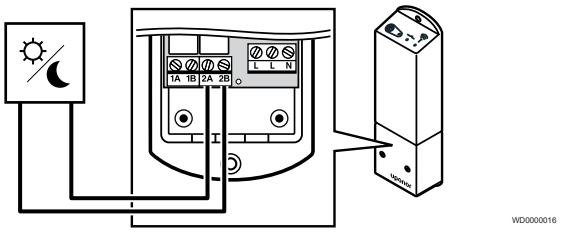

Note

This connection requires a dry contact sensing input in the other unit.

Note

This relay function requires a communication module, and must be set in **Installer settings** during initial configuration, or in the **System settings** menu.

Note

In systems with a communication module, make sure that relay module, relay 2, is set to **Comfort/ECO** in **Installer settings**.

When the relay is closed the external component is set to ECO.

1. Ensure that the power is disconnected from both the relay module and the other unit.
2. Connect the cable to/from the other unit to the connector **2A** and **2B** on the relay module.

Connect ventilation unit (requires communication module)

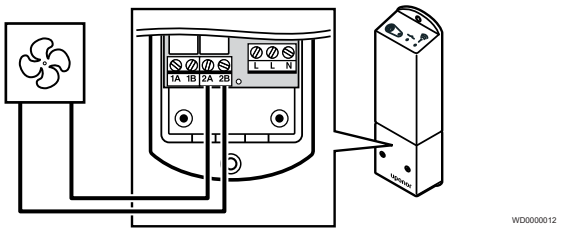

Note

This connection requires a dry contact sensing input in the ventilation unit.

Note

This relay function requires a communication module, and must be set in **Installer settings** during initial configuration, or in the **System settings** menu.

Note

In systems with a communication module, make sure that relay module, relay 2, is set to **Comfort/ECO** in **Installer settings**.

The relay is closed when the Uponor Smatrix system is set to ECO. The ventilation must be setup to lower its speed when the input is closed (ECO), and to switch back when the input is opened again (Comfort).

1. Ensure that the power is disconnected from both the relay module and the ventilation unit.
2. Connect the cable to/from the ventilation unit to the connector **2A** and **2B** on the relay module.

7.4 Register relay module to room controller

1. Enter registration mode

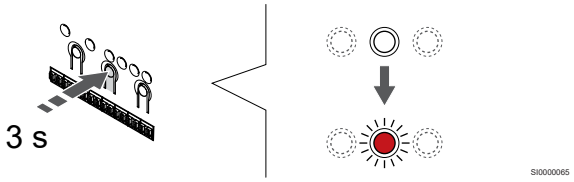

Press and hold the **OK** button on the room controller until the LED for channel 1 (or the first unregistered channel) flashes red.

Note

It is recommended to register at least one room thermostat before registering a system device.

Note

Make sure all components are connected to the relay module before registering.

2. Move the channel pointer to the power LED

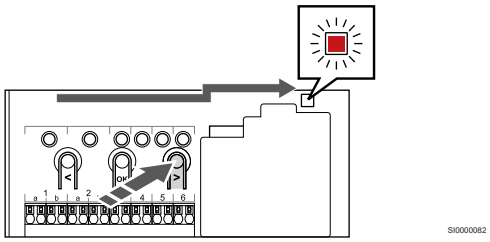

Use buttons **<** or **>** to move the pointer to the power LED (LED flashes red).

3. Enter system device registration mode

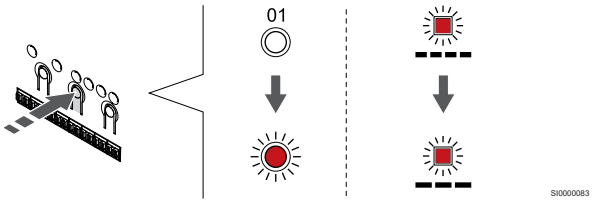

Press the **OK** button to enter system device registration mode (power LED). The power LED starts flashing according to the pattern long blink, short pause, long blink. Channel 1 starts flashing red.

4. Select a channel

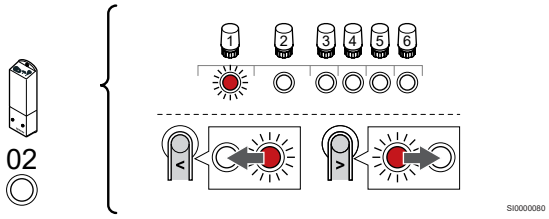

Use buttons **<** or **>** to move the pointer (LED flashes red) to channel 2.

5. Lock selected channel

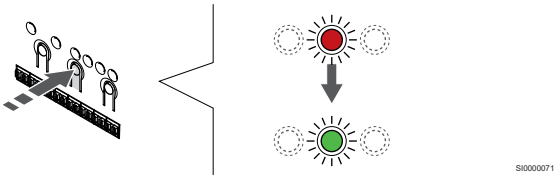

Press the **OK** button to select the channel for registration. The LED for the selected channel starts flashing green.

6. Power up the relay module

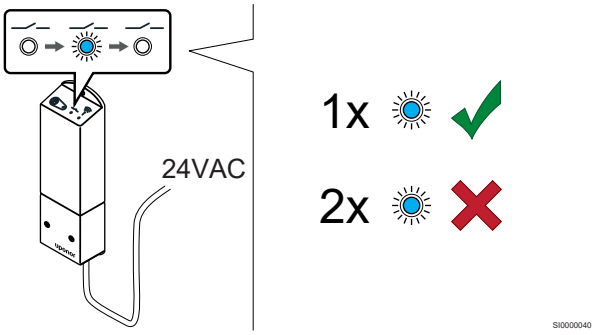

Power up the relay module and count the number of flashes of LED 2 (blue) to ensure it is in normal run mode.

LED 2: 1 flash = Normal (default)

LED 2: 2 flashes = Two stage additional cooling

Change relay module run mode

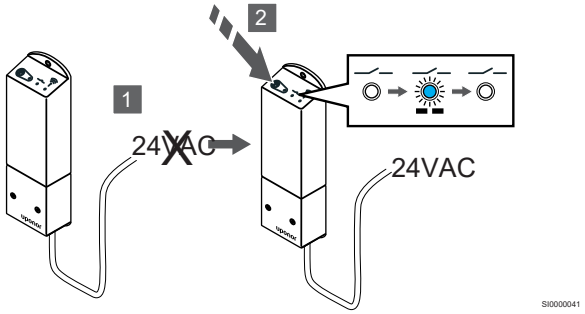

1. Power down the relay module and wait about 10 seconds.
2. Press and hold the button on the relay module while turning it on again.

   LED 2 flashes once (Normal run mode).

7. Register relay module

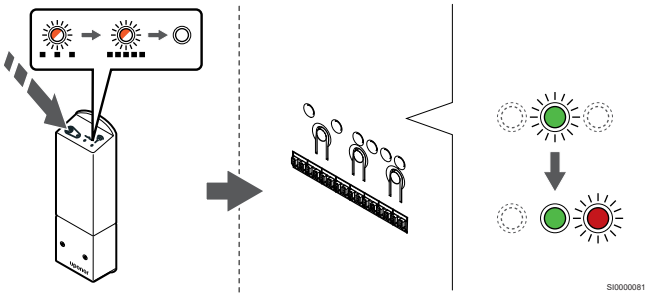

Press and hold the register button on the relay module until the LEDs on the module start flashing slowly.

The selected channel LED in the room controller turns fixed green and the LEDS on the relay module start flashing fast again, to turn off a few seconds later.

8. Exit registration mode

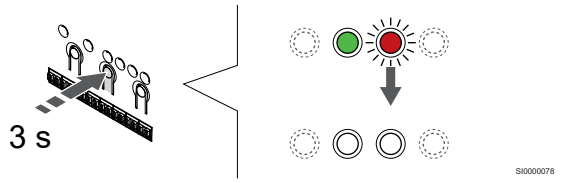

Press and hold the **OK** button on the room controller until the green LEDs turn off to end registration and return to run mode.

7.5 Use relay module to connect fan coils

Caution!

Uponor recommends connecting no more than 4 fancoils per room controller to maintain the regulating performance.

Caution!

In rooms with a fan coil, make sure that an actuator is not connected to the first room channel, as that channel is used to control the fan coil.

The relay module can be used to control fan coils in a room.

The fan coil is connected to a relay module which is registered to a room thermostat channel, and is operated depending on settings in the app (requires communication module). When selecting fan coil in the cooling setting in the app, select the first room channel to where the thermostat is registered.

Connect fan coil to relay module

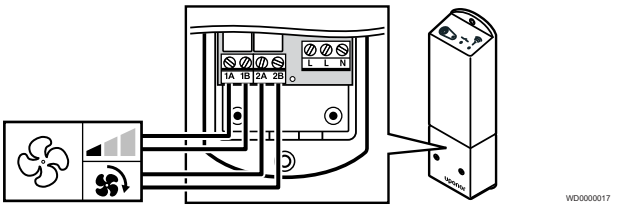

Note

This connection requires dry contact sensing inputs in the fan coil.

Note

This relay function requires a communication module, and must be set in **Installer settings** during initial configuration, or in the **System settings** menu.

The system can control one fan coil per thermostat channel. The fan coil is started and set to a low speed when the relays are closed.

1. Ensure that the power is disconnected from both the relay module and the ventilation unit.
2. Connect the fan coil speed cable to the connector **1A** and **1B** on the relay module.
3. Connect the fan coil on/off cable to the connector **2A** and **2B** on the relay module.

Register fan coil connected relay module to thermostat

Connect power

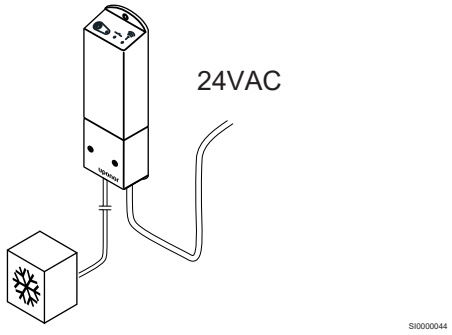

Connect the power cables from the relay module and cooling components to a 234 VAC power supply, or if required by local regulations, to a junction box.

Power up the relay module

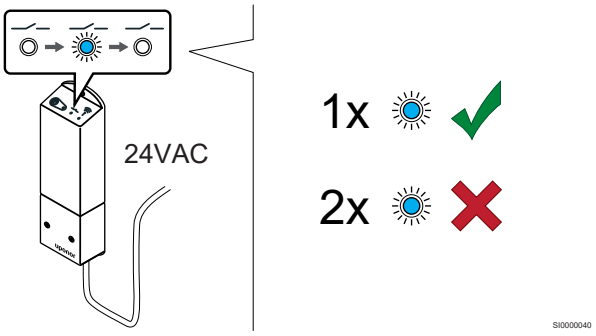

Power up the relay module and count the number of flashes of LED 2 (blue) to ensure it is in normal run mode.

LED 2: 1 flash = Normal (default)

LED 2: 2 flashes = Two stage additional cooling

Change relay module run mode

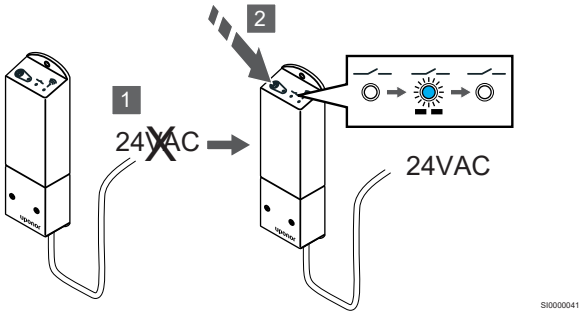

1. Power down the relay module and wait about 10 seconds.
2. Press and hold the button on the relay module while turning it on again.

   LED 2 flashes once (Normal run mode).

Register relay module to thermostat

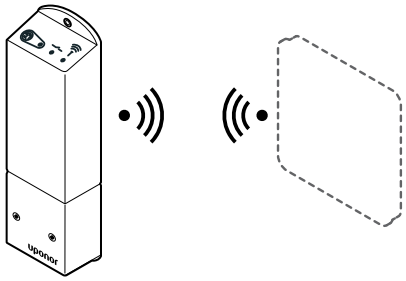

Note

If no button on the thermostat is pressed for about 8 seconds, while in a submenu, the current values will be saved and the software exits to the settings menu. About about 60 seconds later, it exits to run mode.

Register the relay module to a thermostat (already registered to a room controller in the system) using settings menu **09** on the thermostat.

Register to a T-169 thermostat

1. ENTER RELAY MODULE REGISTRATION MODE

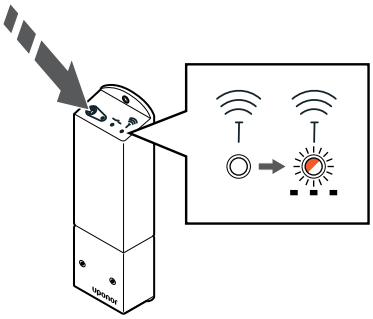

Press and hold the register button on the relay module until the LEDs on the module start flashing slowly.

2. ENTER SETTINGS MENU

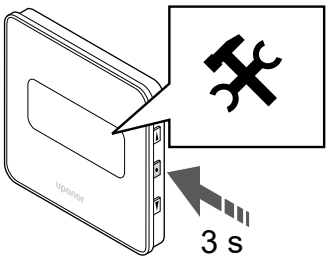

Press and hold the **OK** button for about 3 seconds. The settings icon and menu numbers is displayed in the top right corner of the display.

3. LOCATE MENU 09

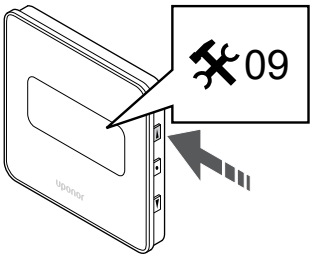

Use buttons ▲ or ▼ to change the numbers to **09**. The text **Int no** is displayed.

4. ENTER PARAMETER EDIT MODE

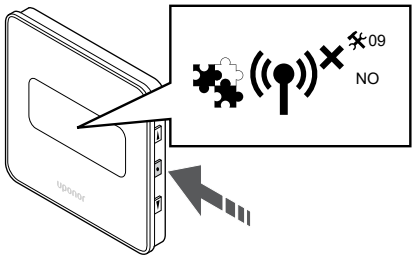

Press **OK** to enter parameter edit mode (the parameter starts flashing).

5. REGISTER THERMOSTAT TO RELAY MODULE

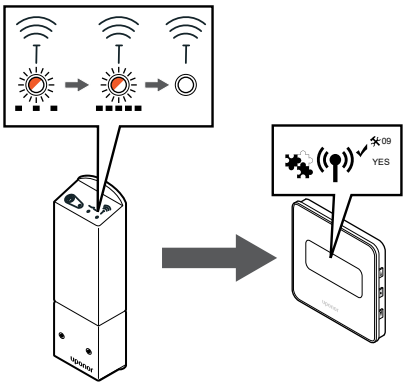

Use buttons ▲ or ▼ to change **Int no** to **Int CNF**.

6. REGISTRATION

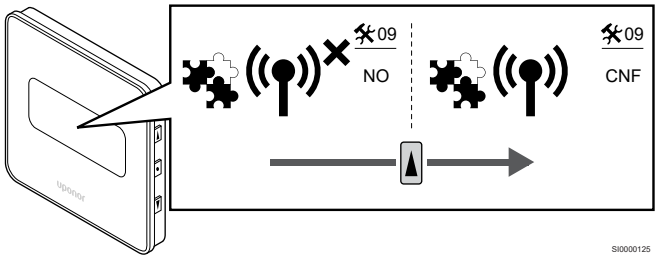

The connection indicator is shown in the thermostat display to show that the registration process begins.

The text **Int YES** is shown in the thermostat display and the LEDS on the relay module start flashing fast again, to turn off a few seconds later.

7. CONFIRM REGISTRATION

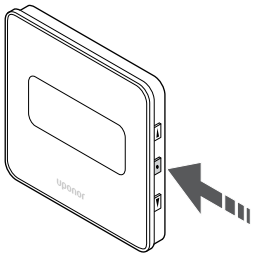

Press **OK** to confirm the parameter change.

8. EXIT SETTINGS MENU

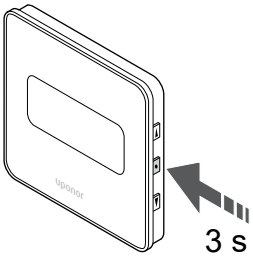

Press and hold the **OK** button for about 3 seconds to exit the settings menu.

7.6 Use relay module for time delayed two stage additional cooling (requires communication module)

Ensure power is disconnected

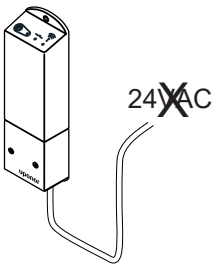

Ensure that the power is disconnected from the relay module and the cooling components.

Connect additional cooling

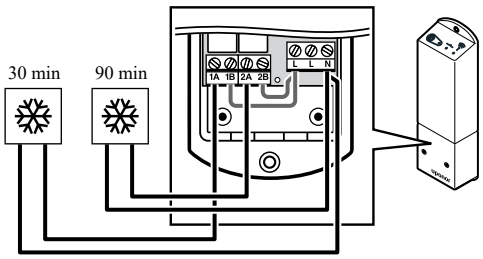

This connection requires a dry contact sensing input in the component producing heating/cooling.

Connect the cable to/from the component producing secondary cooling to one of the relays in the relay module.

Relay 1 (30 min delay): 1A and N

Relay 2 (90 min delay): 2A and N

Connect power

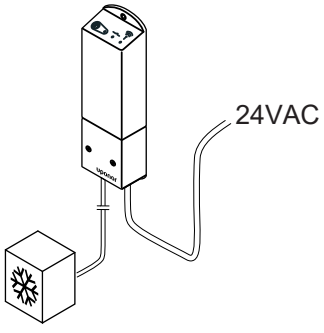

Connect the power cables from the relay module and cooling components to a 24 VAC power supply, or if required by local regulations, to a junction box.

Check relay module run mode

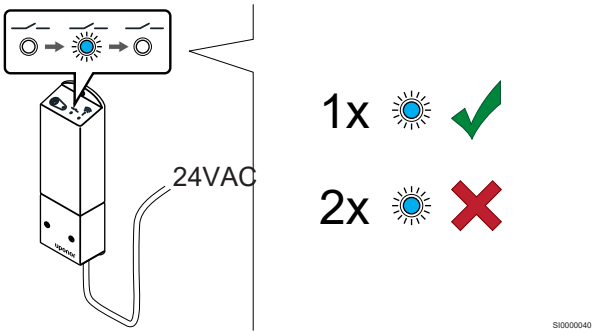

Power up the relay module and count the number of flashes of LED 2 (blue) to ensure it is in two stage additional cooling mode.

LED 2 1 flash = Normal (default)

LED 2 2 flashes = Two stage additional cooling

Change relay module run mode

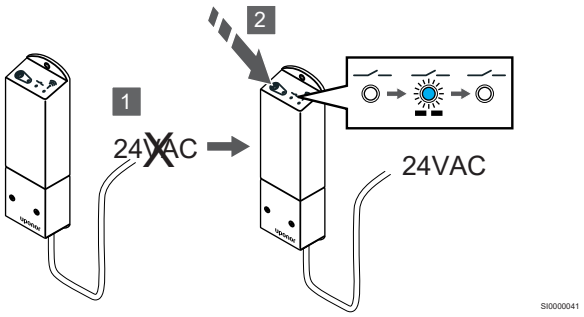

1. Power down the relay module and wait about 10 seconds.
2. Press and hold the button on the relay module while turning it on again.

   LED 2 flashes twice (Two stage additional cooling mode).

Press and hold the **OK** button for about 3 seconds to exit the settings menu.

Register to a T-169 thermostat

1. Enter relay module registration mode

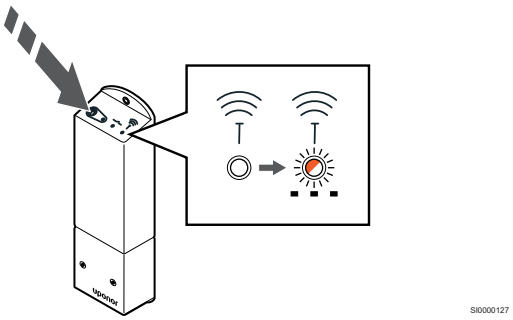

Press and hold the register button on the relay module until the LEDs on the module start flashing slowly.

2. Enter settings menu

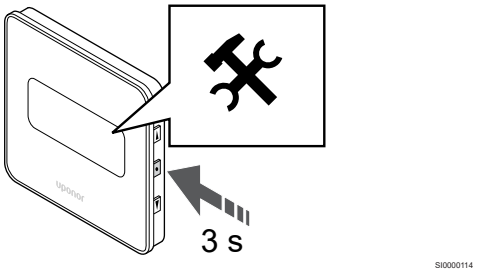

Press and hold the **OK** button for about 3 seconds. The settings icon and menu numbers is displayed in the top right corner of the display.

3. Locate menu 09

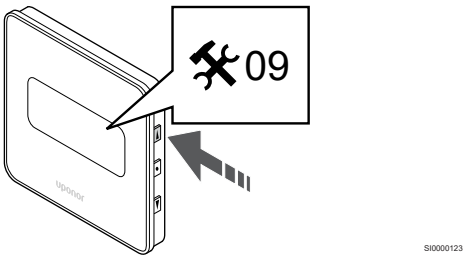

Use buttons ▲ or ▼ to change the numbers to **09**. The text **Int no** is displayed.

4. Enter parameter edit mode

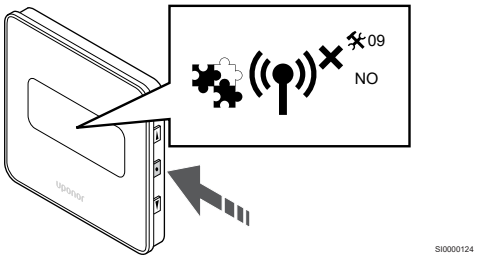

Press **OK** to enter parameter edit mode (the parameter starts flashing).

5. Register thermostat to relay module

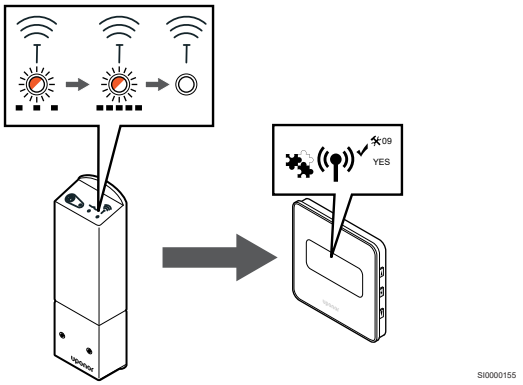

Use buttons ▲ or ▼ to change **Int no** to **Int CNF**.

6. Registration

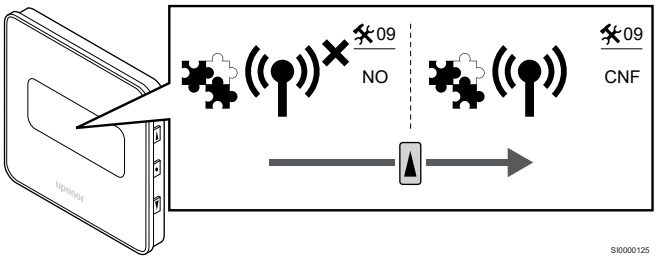

The connection indicator is shown in the thermostat display to show that the registration process begins.

The text **Int YES** is shown in the thermostat display and the LEDS on the relay module start flashing fast again, to turn off a few seconds later.

7. Confirm registration

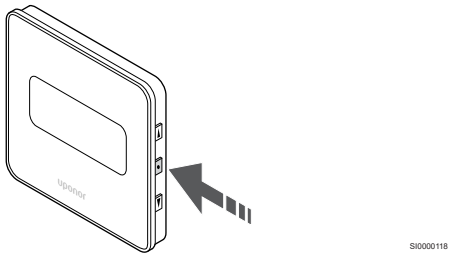

Press **OK** to confirm the parameter change.

8. Exit settings menu

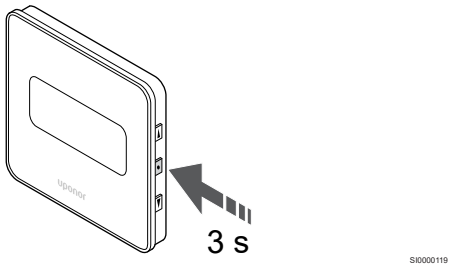

Press and hold the **OK** button for about 3 seconds to exit the settings menu.

8 Install another Uponor Smatrix room controller in the system

8.1 Preparation

Note

The room controller will time out after about 10 minutes of inactivity and revert to normal operation. The timer will be reset when a button is pressed or if a device has been registered to it.

Note

Sub room controllers can only be registered to the master room controller.

Note

If a room controller has been connected to a communication module, disconnect the communication module and restore it to sub room controller state by factory reset.

Existing sub room controllers in the system must then either, reset system device channel 01, or register to another master room controller.

Multiple Uponor Smatrix room controllers can be linked together by assigning one room controller to be master and the rest to be sub room controllers.

The master room controller is assigned by connecting it to the communication module (only one room controller can be master in the system), and it can control up to three sub room controllers. Sub room controllers are assigned when registered (in order) to the master room controller.

- Ensure that all room controllers are powered and that at least one thermostat is registered to each one.
- Ensure access to all room controllers before starting the registration process.
- Assign master/sub roles to the room controllers by connecting the communication module to the master room controller.
- Ensure the sub room controllers are placed witin radio range of the master room controller.

8.2 Register sub room controller to master room controller

Note

The room controller will time out after about 10 minutes of inactivity and revert to normal operation. The timer will be reset when a button is pressed or if a device has been registered to it.

Note

Sub room controllers can only be registered to the master room controller.

1. Enter registration mode on the master room controller

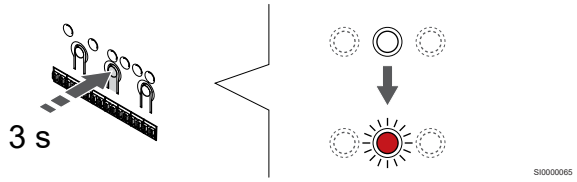

Press and hold the **OK** button on the room controller until the LED for channel 1 (or the first unregistered channel) flashes red.

Note

It is recommended to register at least one room thermostat before registering a system device.

2. Move the channel pointer to the power LED

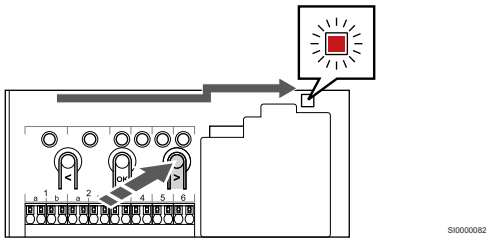

Use buttons **<** or **>** to move the pointer to the power LED (LED flashes red).

3. Enter system device registration mode

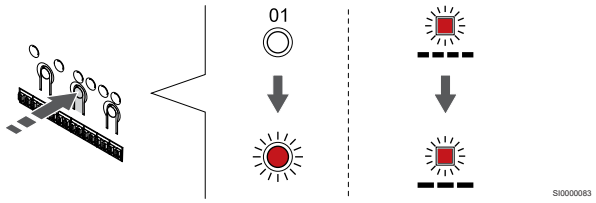

Press the **OK** button to enter system device registration mode (power LED). The power LED starts flashing according to the pattern long blink, short pause, long blink. Channel 1 starts flashing red.

4. Select channel 1

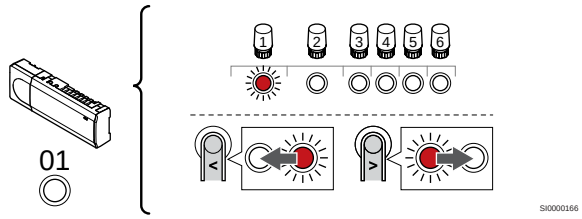

Use buttons **<** or **>** to move the pointer (LED flashes red) to channel 1.

5. Lock selected channel

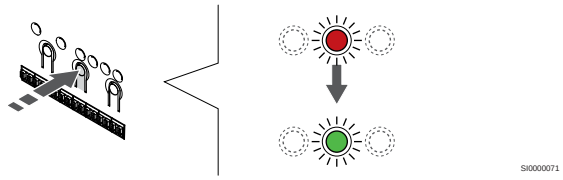

Press the **OK** button to select the channel for registration. The LED for the selected channel starts flashing green.

6. Locate sub room controller

Note

The room controller will time out after about 10 minutes of inactivity and revert to normal operation. The timer will be reset when a button is pressed or if a device has been registered to it.

Locate the sub room controller and lock channel 1 in system device registration mode (see steps 1 through 5).

7. Register sub room controller

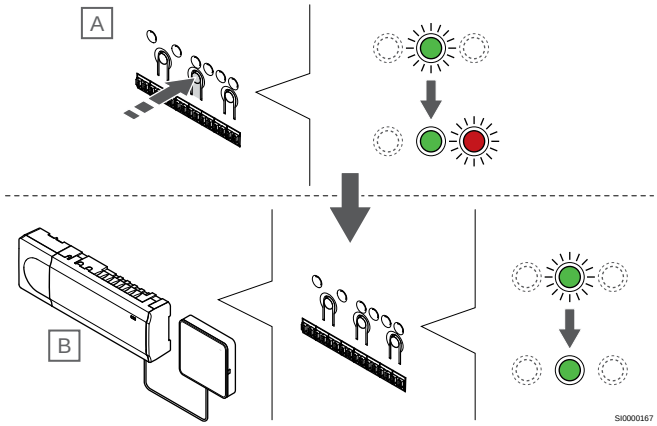

Note

The room controller will time out after about 10 minutes of inactivity and revert to normal operation. The timer will be reset when a button is pressed or if a device has been registered to it.

Press the **OK** button on the sub room controller (A).

Channel 1 LED on both the master (B) and sub (A) room controllers turns fixed green and the registration is complete.

The next sub room controller can be registered within 10 minutes, without the need to activate channel 1 on the master room controller again. But if registration feedback from the master room controller is requested, the full process can start from the beginning again without overwriting the first sub room controller registration.

8. Exit registration mode

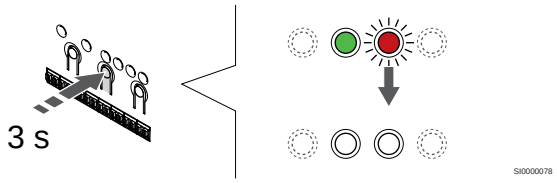

Press and hold the **OK** button on the room controller until the green LEDs turn off to end registration and return to run mode.

To unregister already registered sub room controller, see *Unregister room controller channels, Page 77*.

9 Finishing installation

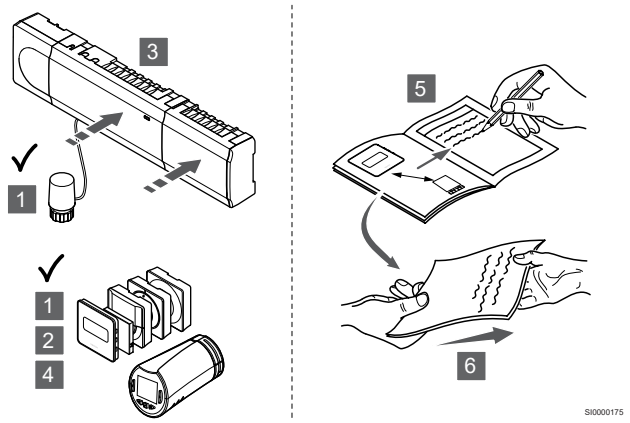

Make a complete check up of the installation:

1. Check that the thermostats, and thermostatic heads (if installed), are working correctly. Turn thermostat setpoints to maximum to obtain a heating demand and make sure that the actuators are running.
2. Set thermostats to the defined operating settings.
3. Close the covers of the room controller.
4. Attach thermostats to the wall.
5. Print and fill in the “Installation report” (separate downloadable document).
6. Give the printed manuals and all information about the system to the user.

10 Operate Uponor Smatrix Wave PULSE room controller

10.1 Principle of operation

The room controller operates the underfloor heating/cooling installation according to customer needs. Temperatures can be adjusted with thermostats located in each room, or if installed with the Uponor Smatrix PULSE app (requires communication module).

As soon as the temperature measured at a thermostat is lower (heating mode) or higher (cooling mode) than the setpoint temperature, a demand to change the room temperature is created and sent to the room controller. The room controller will open the actuators according to current operating mode and other settings. Once the set temperature is reached, this information is sent and the actuators are closed.

The system supports different types of cooling methods and is setup in the Uponor Smatrix PULSE app.

Available cooling methods in the Uponor Smatrix PULSE app.

- Underfloor cooling (UC)

  Cooling in the system is achieved using underfloor loops.
- Fancoil (FC)

  Cooling in the system is achieved using fancoils (connected to a relay module registered to a room thermostat).

  Note! Autobalancing (Installer settings) should be disabled in the system.

  In rooms where underfloor cooling is allowed and a fancoil is installed, underfloor cooling is started when the room temperature is a couple of degrees above setpoint (1st stage), and the fancoil is started at setpoint (2nd stage cooling).
- Ceiling cooling (CC)

  Cooling in the system is achieved using ceiling cooling (2-pipe or 4-pipe system).

  Select if the system utilizes a 2-pipe or 4-pipe delivery solution for heating/cooling.

  - 2-pipe means one supply temperature to the system at a time (heating or cooling).

    *Autoblancing disabled:*In rooms where underfloor heating/cooling is allowed. Underfloor cooling and ceiling cooling is both started when the room termperature is about 1 degree above setpoint.

    Autobalancing enabled: Ceiling cooling and underfloor cooling will follow the current cooling demand.
  - 4-pipe means separate independent heating/cooling sources.

    In heating mode:

    The underfloor loops are used when there is a heating demand. Ceiling cooling is used when there is a cooling demand.

    In cooling mode:

    Underfloor loops and ceiling cooling are used at the same time when there is a cooling demand.

See Uponor Smatrix PULSE app for more information about the individual functions.

10.2 Normal operation without optional scheduling - programs

When the system is running in normal mode:

- In **Heating mode**, the actuators are open when room temperatures are lower than the temperatures set on the thermostats.
- In **Cooling mode**, the actuators are open when room temperatures are higher than the temperatures set on the thermostats.

  See Uponor Smatrix PULSE app for more information about different cooling configurations.

For more information see, *Operate Uponor Smatrix Wave thermostats, Page 81*.

For more information see, *Operate Uponor Smatrix Wave thermostatic head, Page 97*.

10.3 Operation with scheduling - programs

Scheduling programs provide an option to switch selected rooms between Comfort and ECO mode using a 7-day program. This optimises the installation and conserves energy.

The use of scheduling programs requires at least one of:

- Uponor Smatrix Wave T-168 (programmable thermostat)
- Uponor Smatrix PULSE R-208 (required for mobile app access)

For more information see, *Operate Uponor Smatrix Wave thermostats, Page 81*.

For more information see, *Operate Uponor Smatrix PULSE communication module, Page 80*.

10.4 Run mode

During normal operation the room controller is in run mode.

Exit to run mode

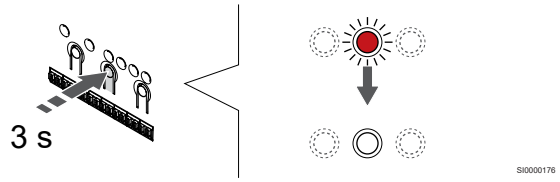

If the room controller is in registration or forced mode, exit to run mode by pressing the OK button until the LEDs turn off (about 3 seconds).

10.5 Room controller LEDs

If the Uponor Smatrix PULSE app (requires communication module) is not used, it is recommended to occasionally check the power LED on the room controller for alarms. The power LED flashes continuously for general alarms. Determine which thermostats are issuing alarms by removing the cover. If a channel LED is indicating an error, check the function and batteries of the registered thermostat.

The room controller power LED is on (green) during normal operation.

All the channel LEDs are off when there is no current or waiting actuator activity. The LEDs turn on when the corresponding actuators are activated or start flashing when they are awaiting activation.

Up to eight actuators in six rooms can be in the opening process at the same time. If a slave module is installed, the LEDs of the seventh and subsequent actuators flash while they are waiting for the previous actuators to be fully open.

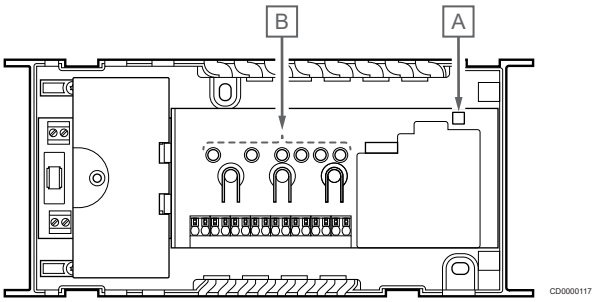

Item	Description
A	Power LED
B	Channel LEDs

Run mode

Power LED	Status
Green, fixed	Room controller is powered on
Red, flashing	A problem has occurred, such as • Loss of radio transmission from a thermostat for more than 1 hours

Channel LED	Status
Red, fixed	Activated actuator
Red, flashing	• Channel waiting its turn to be activated • Thermostat communication error or low battery indication • Tamper alarm (public thermostat)
Off	No heating, or cooling, demand

Registration mode

Power LED	Status
Red, fixed	Room controller is in thermostat registration mode
Red, flashing	Selector pointing at system device channel
Red, flashing slowly	Room controller is in system device registration mode

Channel LED	Status
Red, fixed	Thermostat registered but with communication errors
Green, fixed	Thermostat registered and communication is OK
Red, flashing	Selector pointing at channel
Green, flashing	Channel selected to be registered
Off	Selector not pointing at channel, nor registered

Forced mode

Channel LED	Status
Red, fixed	Activated actuator
Red, flashing	Selector pointing at channel
Off	Selector not pointing at channel, nor activated

12.6 Reset the controller

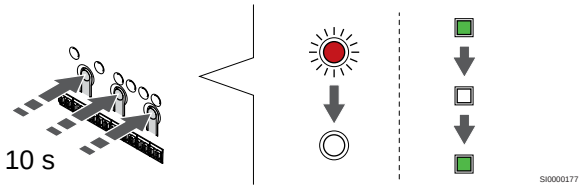

Note

Make sure the room controller is in run mode. If it is in registration or forced mode, press and hold the OK button for about 5 seconds or until the LEDs turn off.

Note

Resetting the room controller removes all registration information and settings from the room controller. Registration of thermostats and system devices are once again required.

Note

If a room controller has been connected to a communication module, disconnect the communication module and restore it to sub room controller state by factory reset.

Existing sub room controllers in the system must then either, reset system device channel 01, or register to another master room controller.

Note

If resetting a sub room controller, all remaining sub room controllers must be unregistered from the master room controller (system device channel 1). Register the remaining sub room controllers to the master room controller again when finished.

If problems, such as incorrect channel registration exist, reset the room controller.

To reset the room controller:

1. Press the **<**, **OK**, and **>** buttons simultaneously (for about 10 seconds) until the power LED flashes, and all channel LEDs turn off. All parameters are erased and run mode has been activated.

10.7 Unregister room controller channels

Note

Make sure the room controller is in run mode. If it is in registration or forced mode, press and hold the OK button for about 5 seconds or until the LEDs turn off.

When a channel is inaccurately registered or if a thermostat registration needs to be redone, it is possible to remove the current registration from the room controller.

Unregister a room controller channel

1. Enter registration mode

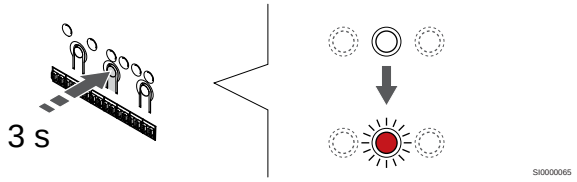

Press and hold the **OK** button on the room controller until the LED for channel 1 (or the first unregistered channel) flashes red.

2. Select a channel

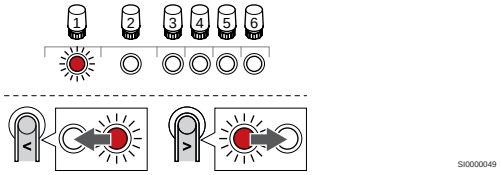

Use buttons **<** or **>** to move the pointer (LED flashes red) to the channel to unregister (solid green LED).

3. Unregister the channel

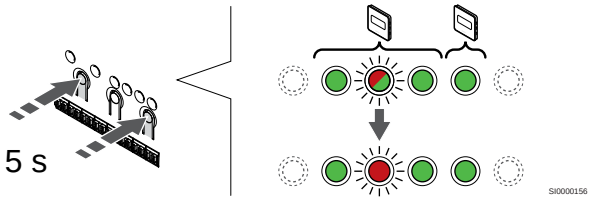

Press the **<** and **>** buttons simultaneously until the LED for the selected channel starts flashing red (about 5 seconds).

4. Exit registration mode

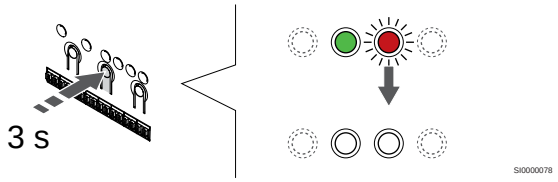

Press and hold the **OK** button on the room controller until the green LEDs turn off to end registration and return to run mode.

Unregister a system device channel

1. Enter registration mode

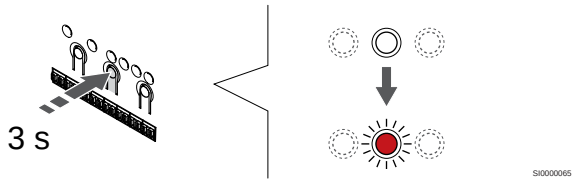

Press and hold the **OK** button on the room controller until the LED for channel 1 (or the first unregistered channel) flashes red.

2. Move the channel pointer to the power LED

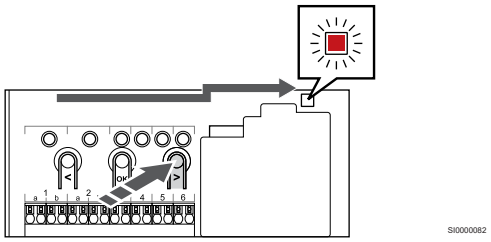

Use buttons **<** or **>** to move the pointer to the power LED (LED flashes red).

3. Enter system device registration mode

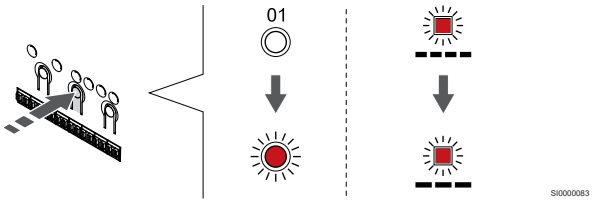

Press the **OK** button to enter system device registration mode (power LED). The power LED starts flashing according to the pattern long blink, short pause, long blink. Channel 1 starts flashing red.

4. Select a channel

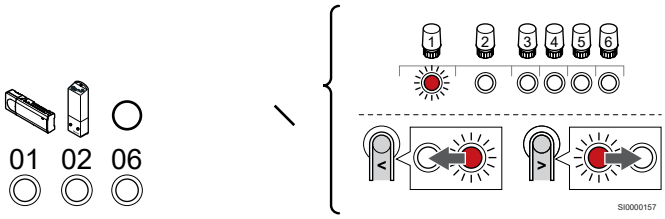

Note

If unregistering system device channel 1 from a sub room controller, all remaining sub room controllers must be unregistered from the master room controller (system device channel 1). Register the remaining sub room controllers to the master room controller again when finished.

Use buttons **<** or **>** to move the pointer (LED flashes red) to the channel to unregister (solid green LED).

Channel

1 Sub room controller

2 Relay module

6 Not used

5. Unregister the channel

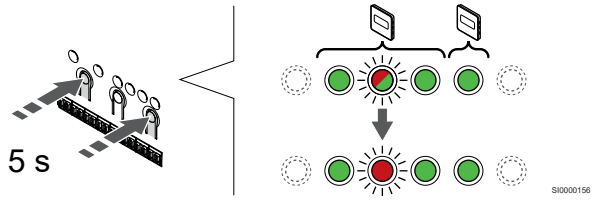

Press the **<** and **>** buttons simultaneously until the LED for the selected channel starts flashing red (about 5 seconds).

6. Exit registration mode

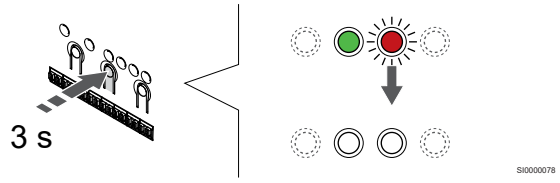

Press and hold the **OK** button on the room controller until the green LEDs turn off to end registration and return to run mode.

Unregister all room controller channels

1. Enter registration mode

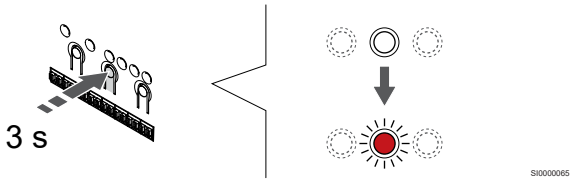

Press and hold the **OK** button on the room controller until the LED for channel 1 (or the first unregistered channel) flashes red.

2. Unregister all channels

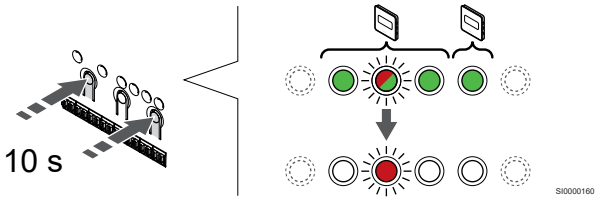

Press the **<** and **>** buttons simultaneously until the LEDs for all channels except one turn off (about 10 seconds). The one remaining flashes red.

3. Exit registration mode

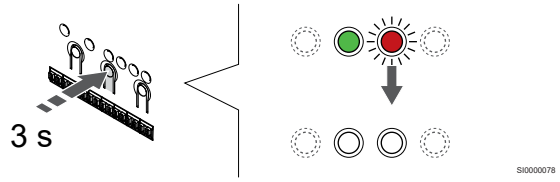

Press and hold the **OK** button on the room controller until the green LEDs turn off to end registration and return to run mode.

11 Operate Uponor Smatrix PULSE communication module

11.1 Communication module layout

The illustration below shows the parts of the thermostat.

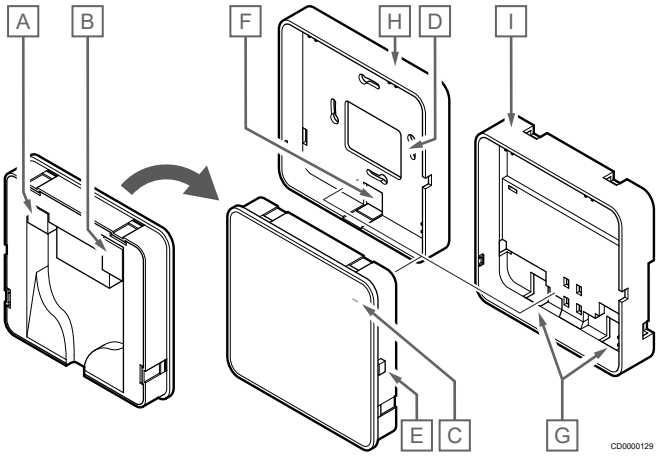

Item	Description
A	Communication connector (between communication module and room controller)
B	Ethernet RJ45 connector
C	Function LED
D	Back hole cable entry
E	Operating button
F	Breakout plastic, for cable entry
G	Cable entries
H	Standard back mount
I	DIN-rail back mount

11.2 Communication module LEDs

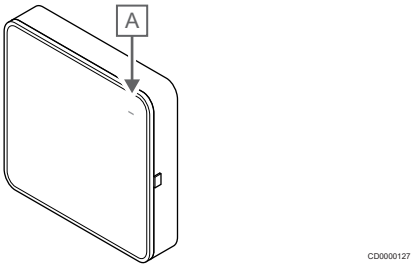

Item	Description
A	Function LED

LED	Status
Green, fixed	Communication module is powered on and connected to Uponor cloud services.
Orange, fixed	Communication module is powered on and connected to LAN (using Wi-Fi or ethernet), not connected to Uponor cloud services.
Orange, flashing	Communication module is powered on and a local temporary Wi-Fi access point mode is activated.
Red, fixed	Communication module is powered on and but not connected to LAN (using Wi-Fi or ethernet) or communication module access point.

11.3 Factory reset the communication module

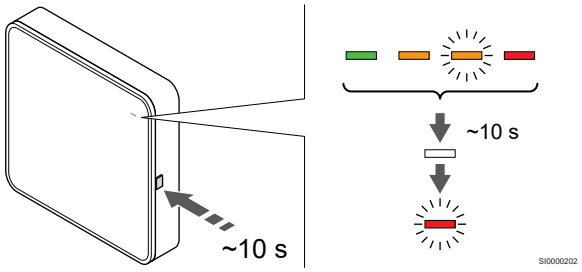

Note

This function does not affect room controller and thermostat related settings.

This function resets the communication module to factory settings, and is mostly used when transferring the system to a new owner.

To factory reset the communication module:

1. Press the operating button (for about 10 seconds) until the function LED turns off.
2. Release the button and the communication module reboots to factory settings.
3. When the LED starts flashing red, unplug and plug in the controller to send installation data to the communication module.

12 Operate Uponor Smatrix Wave thermostats

12.1 Thermostat type

Two types of thermostats, both analogue and digital, can be used in an Uponor Smatrix Wave system.

Analogue thermostats

Uponor Smatrix Wave T-161

Digital thermostats

Uponor Smatrix Wave T-169

The digital thermostats have a display relaying information to the user and buttons for control.

12.2 Thermostat layout

Uponor Smatrix Wave T-161

During normal operation the thermostat is monitored and controlled via the Uponor Smatrix PULSE app (requires communication module).

The illustration below shows the parts of the thermostat.

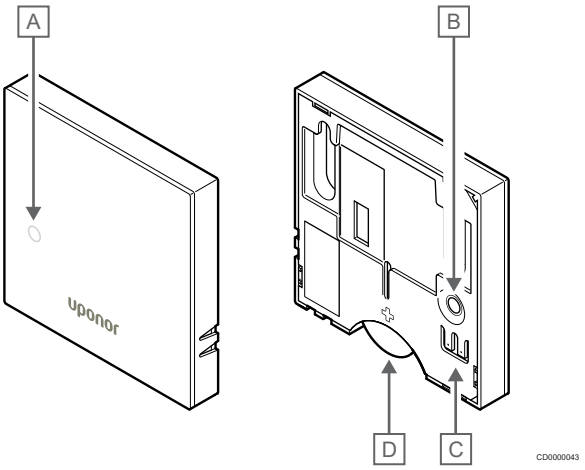

Item	Description
A	Low battery level LED (flashes once every two hours)
B	Registration button
C	Terminal for external sensor (non-polarised)
D	Battery

Uponor Smatrix Wave T-169

The illustration below shows the parts of the thermostat.

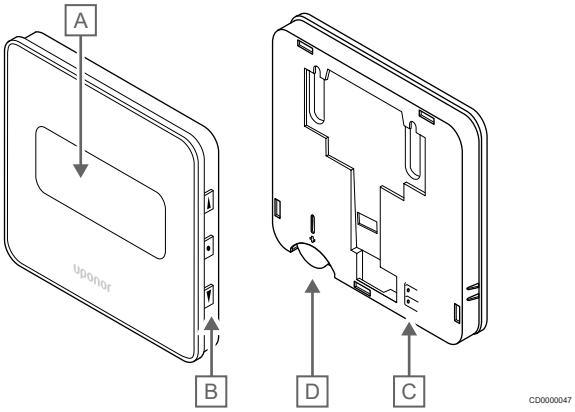

Item	Description
A	Display
B	Buttons
C	Terminal for external sensor (non-polarised)
D	Battery

Display layout

Run mode (default screen)

The figure shows all possible symbols and characters that can be shown on the display:

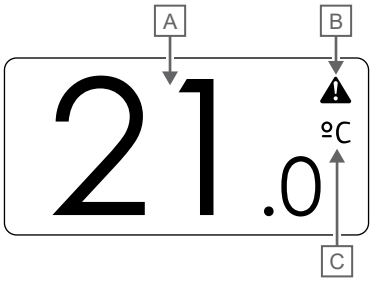

Item	Icon	Description
A	21.0	Temperature reading using a - or + sign, two digital characters, a decimal point and a character showing either 0 or 5
B		Alarm symbol
C	ºC ºF	Temperature unit

Change setpoint

The figure shows all possible symbols and characters that can be shown on the display:

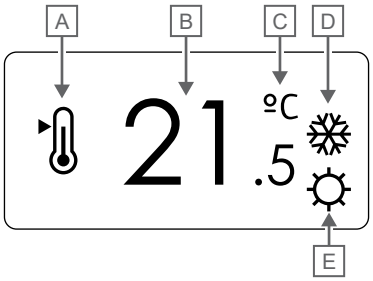

Item	Icon	Description
A		Change setpoint mode
B	21.5	Temperature setpoint, using a - or + sign, two digital characters, a decimal point and a character showing either 0 or 5
C	ºC ºF	Temperature unit
D		Heating demand
		Cooling demand
E		Comfort mode
		ECO mode

Alarms

The figure shows all possible symbols and characters that can be shown on the display:

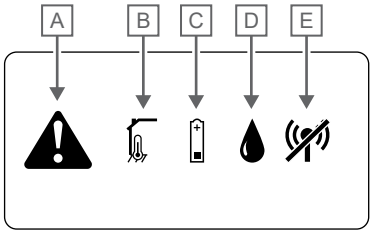

Item	Icon	Description
A		Alarm mode
B		Faulty indoor temperature sensor
		Faulty floor temperature sensor
		Faulty remote temperature sensor
		Faulty outdoor temperature sensor
C		Low battery indicator
D		Relative humidity limit reached (high limit) This symbol is only shown if cooling is active, and if RH control is be activated in the Uponor Smatrix PULSE app (requires communication module).
E		Communication fault indicator

Control mode

The figure shows all possible symbols and characters that can be shown on the display:

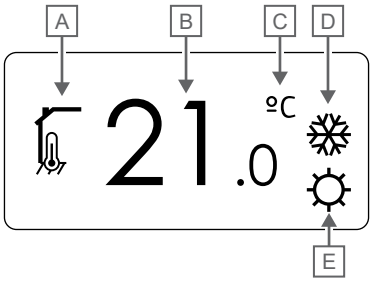

Item	Icon	Description
A		Current control mode Indoor temperature indicator
		Current control mode Indoor temperature with floor temperature limitation indicator
		Current control mode Remote sensor temperature indicator
		Current control mode Outdoor temperature indicator
B	21.0	Temperature unit, shown when the character group **A** shows a temperature
C	ºC ºF	Temperature unit
D		Heating demand
		Cooling demand
E		Comfort mode
		ECO mode

Relative humidity

The figure shows all possible symbols and characters that can be shown on the display:

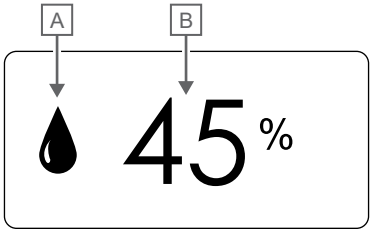

Item	Icon	Description
A		Relative humidity level
B	45	Relative humidity reading using two digital characters. Indicated with a “%” character

Button layout

The figure below shows buttons used to operate the digital thermostats.

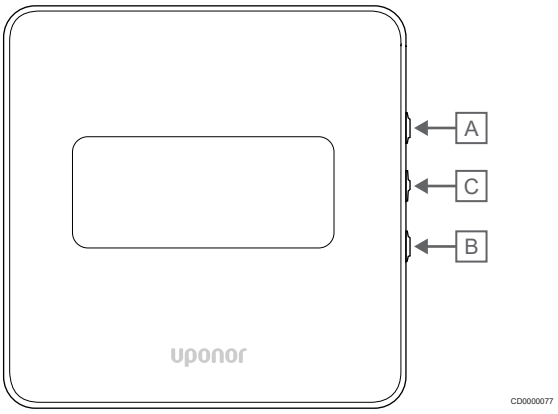

Item	Description
A	The ▼ and ▲ buttons are used to:
B	• Adjust setpoint temperature • Modify settings menu parameters
C	The **OK** button is used to: • Toggle between current status data, and values of available sensors connected to the thermostat • Enter and exit the settings menu • Confirm a setting

12.3 Start up

Analogue thermostats

The thermostat will perform a self test, for about 10 seconds, when starting up. The system will be blocked for input and the thermostat LED flashes during this period.

Digital thermostats

When starting up, the software version is shown in the display for about three seconds. Then the thermostat enters run mode (except the programmable thermostat which may require the time and date to be set).

12.4 Adjust temperature

The temperature is changed by adjusting the setpoint on the thermostat to a value between 5 and 35 ˚C. It is possible to set minimum and maximum temperature limits using the Uponor Smatrix PULSE app (requires communication module).

Uponor Smatrix Wave T-161

The setpoint for the thermostat can only be changed via the Uponor Smatrix PULSE app (requires communication module). Otherwise the setpoint will be fixed to 21 ˚C.

Uponor Smatrix Wave T-169

Use the buttons on the thermostat to adjust the temperature. The display will light up when pushing a button. It shuts off after about 10 seconds of inactivity.

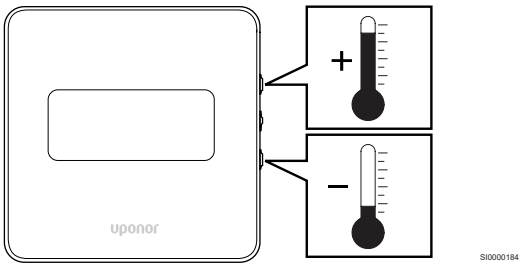

To adjust the thermostat temperature setpoint of the current control mode:

1. Press the ▼ or ▲ button once.

   The screen shows the current setpoint flashing.
2. Press the ▼ or ▲ button repeatedly to adjust the setpoint temperature. It will change with increments of 0.5.

   When the new setpoint is set, the screen returns to run mode after a few seconds, showing the room temperature.

12.5 Digital thermostat functions

Run mode

During normal operation the thermostat is in run mode.

While in run mode the display shows specific control mode information.

Control mode

Note

If no button on the thermostat is pressed for about 8 seconds, while in a submenu, the current values will be saved and the software exits to the settings menu. About about 60 seconds later, it exits to run mode.

The thermostat has four different control modes, set in the settings menu.

Change control mode

See *Change settings, Page 90*, for how to change the setting.

Room temperature sensor and outdoor temperature sensor

1. Room temperature (default)
2. Relative humidity
3. Outdoor temperature

Uponor Smatrix Wave T-169

Thermostat function	Symbol
Room temperature sensor	
Room temperature sensor and floor temperature sensor	
Remote sensor	
Room temperature sensor and outdoor temperature sensor	

Different types of information can be shown in the display when in a control mode. Use the **OK** button to toggle between the information available.

Room temperature sensor

1. Room temperature (default)
2. Alarm list (only shown if an alarm is present)
3. Room temperature, current ECO/Comfort mode, and current heating/cooling demand
4. Relative humidity

Room temperature sensor and floor temperature sensor

1. Room temperature (default)
2. Alarm list (only shown if an alarm is present)
3. Floor temperature, current ECO/Comfort mode, and current heating/cooling demand
4. Relative humidity

Remote sensor

1. Remote sensor (default)
2. Alarm list (only shown if an alarm is present)
3. Remote sensor, current ECO/Comfort mode, and current heating/cooling demand
4. Relative humidity

Room temperature sensor and outdoor temperature sensor

1. Room temperature (default)
2. Alarm list (only shown if an alarm is present)
3. Outdoor temperature, current ECO/Comfort mode, and current heating/cooling demand
4. Relative humidity

Thermostat settings

Note

If no button on the thermostat is pressed for about 8 seconds, while in a submenu, the current values will be saved and the software exits to the settings menu. About about 60 seconds later, it exits to run mode.

In this menu all settings regarding the operation of the thermostat is set.

Change settings

Uponor Smatrix Wave T-169

To enter the settings menu:

1. Press and hold the **OK** button for about 3 seconds.
2. The settings icon and menu numbers is displayed in the top right corner of the display.
3. Use buttons ▼ or ▲ to change the numbers to locate a submenu (see list below).

02
Heating/cooling changeover

This menu is not visible if the thermostat is registered to a room controller.

03
ECO mode setback temperature

04
Control mode

05
High floor temperature limitation

06
Low floor temperature limitation

07
Cooling allowed

08
Display unit

09
Climatic controller integration

11
Room temperature calibration

12
Invert screen

4. Press **OK** to enter parameter edit mode.

   The menu number is underlined.
5. Change parameters in the submenus.
6. Press and hold the **OK** button for about 3 seconds to exit the settings menu.

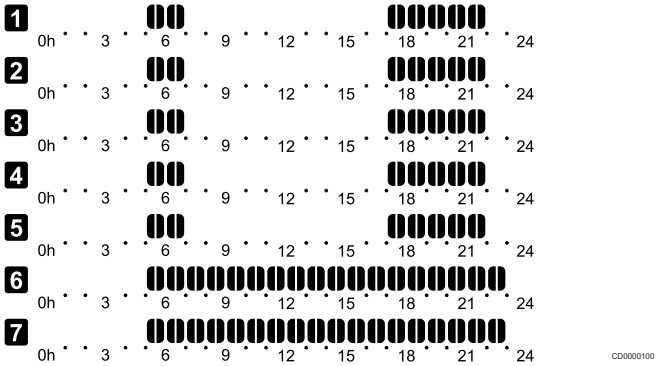

Figure 3. Program P1

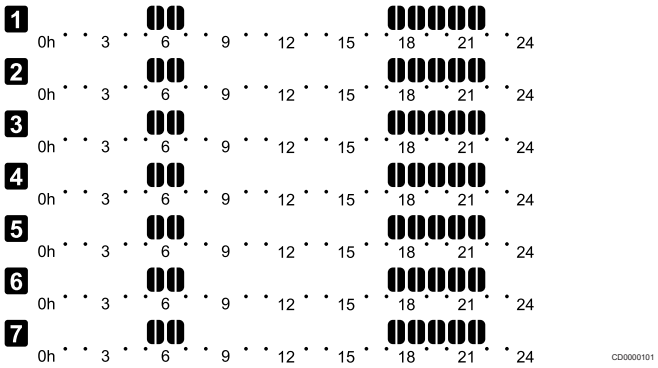

Figure 4. Program P2

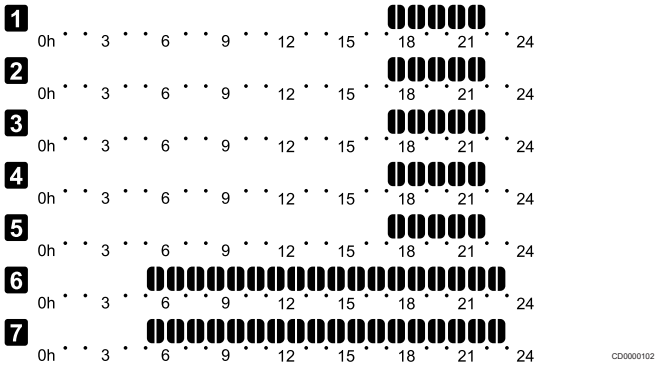

Figure 5. Program P3

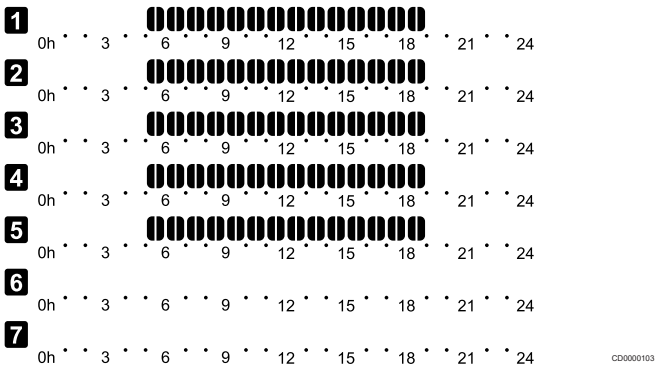

Figure 6. Program P4

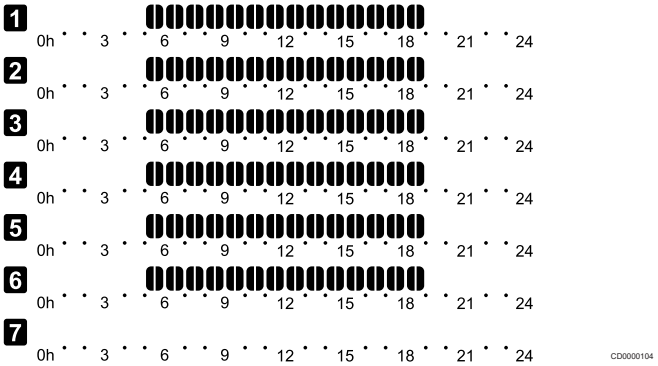

Figure 7. Program P5

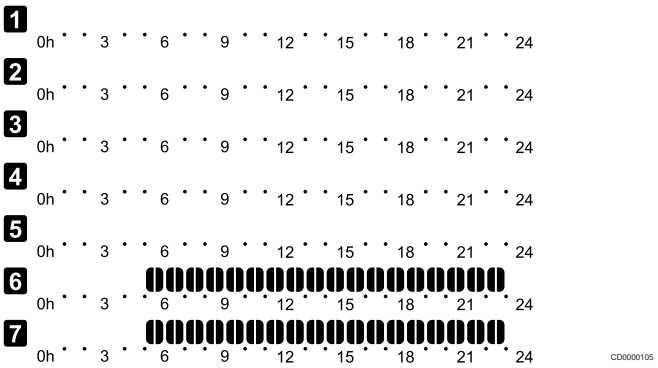

Figure 8. Program P6

Select scheduling program

To select a scheduling program:

1. Press **OK** to enter parameter edit mode.
2. Use buttons **-** or **+** to select program.

   Select between: **P1**–**P6**, **U** (user defined program) and **Off**.
3. Press **OK** to confirm program selection and return to the settings menu.

Customise user defined program for a single day

To customise the user defined program:

1. Press **OK** to enter parameter edit mode.
2. Use buttons **-** or **+** to select program **U**.
3. Press **OK** to confirm program selection and return to the settings menu.

   The current day starts flashing.
4. Use buttons **-** or **+** to select a day.
5. Press and hold **OK** until **00:00** appears on the display (takes about 2 seconds).
6. Press **OK** to switch the marked interval between Comfort (☼) and ECO mode (☾).
7. Use buttons **-** or **+** to move the marker (at the bottom of the display). When moving the marker from one interval to another save the selected mode to that interval.
8. Repeat steps 6 and 7 until the display shows **23:30**.
9. Press **+** to finalize the current day and the software exits to the settings menu.
10. Repeat from step 1 to customise another day.

Customise user defined program for a full week

Note

This method resets the current user defined program to factory defaults.

To customise the user defined program:

1. Press **OK** to enter parameter edit mode.
2. Use buttons **-** or **+** to select program **U**.
3. Press and hold **OK** until day **1** and **00:00** appears on the display.
4. Press **OK** to switch the marked interval between Comfort (☼) and ECO mode (☾).
5. Use buttons **-** or **+** to move the marker (at the bottom of the display). When moving the marker from one interval to another save the selected mode to that interval.
6. Repeat steps 4 and 5 until the display shows **23:30**.
7. Press **+** to finalize programming the current day.

   The text **Copy Yes** appears (**Yes** is flashing).
8. Use buttons **-** or **+** to select **Yes** or **No** and press **OK** to confirm.

   Yes: Copy the setting of the current day to the next. Repeat for every day that should be identical.

   No: Create a new scheduling interval for the following day. Then repeat steps 4 through 8 until the whole week is programmed.
9. The display returns to the settings menu when the final day is done.

02 Heating/cooling changeover

This menu is not visible if the thermostat is registered to a room controller. Heating/cooling changeover will be controlled by a physical heating/cooling switch or in the Uponor Smatrix PULSE app (requires communication module).

03 ECO mode setback temperature

Default: 4 ˚C

Setting range: 0 – 11 ˚C, 0.5 ˚C increments

In this menu the setback temperature for whenever the channel is in ECO mode is set.

The setting adjusts the current setpoint with the set value. In heating mode the setpoint is reduced, and in cooling mode it is increased.

If the setback temperature is set to 0, the thermostat will remain unaffected if a program sets the system in ECO mode.

This menu is not visible if a communication module is connected to the system. The setting is then available in the Uponor Smatrix PULSE app.

See *Change settings, Page 90*, for how to change the setting.

04 Control mode

In this menu control mode for the thermostat is set.

If an external sensor is connected to the thermostat, a control mode must be chosen to accommodate the extra functionality of the sensor.

Current control mode is displayed (RT, RFT, RS or RO).

See *Change settings, Page 90*, for how to change the setting.

Uponor Smatrix Wave T-169

Symbol	Description
	Room temperature sensor
	Room temperature sensor and floor temperature sensor
	Remote sensor
	Room temperature sensor and outdoor temperature sensor

05 High floor temperature limitation

Note

This parameter cannot be set lower than the set value in settings menu **06 Low floor** temperature limitation.

Default: 26 ˚C

Setting range: 20 – 35 ˚C, 0.5 ˚C increments

In this menu a limit on the maximum allowable floor temperature is set.

This menu is only visible if control mode RFT is activated in settings menu 04. For systems with a communication module this menu only shows the set value, changes are done in the Uponor Smatrix PULSE app.

See *Change settings, Page 90*, for how to change the setting.

06 Low floor temperature limitation

Note

This parameter cannot be set higher than the set value in settings menu **05 High floor** temperature limitation.

Default: 20 ˚C

Setting range: 10 – 30 ˚C, 0.5 ˚C increments

In this menu a limit on the minimum allowable floor temperature is set.

This menu is only visible if control mode RFT is activated in settings menu 04. For systems with a communication module this menu only shows the set value, changes are done in the Uponor Smatrix PULSE app.

See *Change settings, Page 90*, for how to change the setting.

07 Cooling allowed

In this menu it is set whether cooling is allowed in the room or not.

This menu is not visible if a communication module is connected to the system. The setting is then available in the Uponor Smatrix PULSE app.

See *Change settings, Page 90*, for how to change the setting.

Uponor Smatrix Wave T-166

Uponor Smatrix Wave T-169

Symbol	Description
	Shows the cooling demand icon
	Hides the cooling demand icon

08 Display unit

In this menu temperature display unit is set.

See *Change settings, Page 90*, for how to change the setting.

Uponor Smatrix Wave T-169

Symbol	Description
✕	Not integrated
✓	Integrated (requires to be registered with the Move supply controller first)
	Register with the Move supply controller/relay module, confirm on the Move supply controller/relay module

Uponor Smatrix Wave T-169

Symbol	Description
°C	Degrees Celsius
°F	Degrees Fahrenheit

09 Climatic controller integration

In this menu it is set whether the thermostat also should be integrated, and share temperature data, with an Uponor Smatrix Move supply controller.

This menu can also be used when registering the thermostat to a relay module. Using the relay module to control distributed manifolds.

Default value: **no**

See *Change settings, Page 90*, for how to change the setting.

11 Room temperature calibration

Default: 0.0 ˚C

Setting range: -6.0 – 6.0 ˚C, 0.1 ˚C increments

In this menu the room temperature shown in the thermostat display can be calibrated.

See *Change settings, Page 90*, for how to change the setting.

12 Invert screen (T-169 only)

In this menu the colour in the display can be inverted.

See *Change settings, Page 90*, for how to change the setting.

14.6 Replace batteries

Uponor Smatrix Wave T-161

Replace the battery of the thermostat when the LED flashes (once every two hours).

The thermostat will perform a self test, for about 10 seconds, when the battery have been inserted. The system will be blocked for input and the thermostat LED flashes during this period.

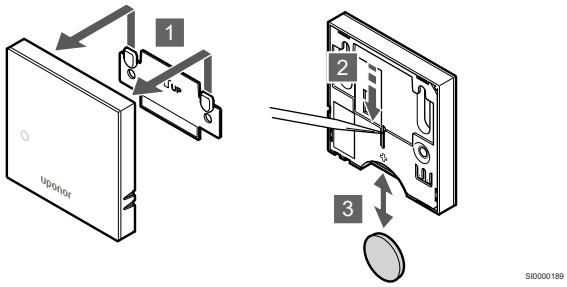

To change the battery:

1. Remove the thermostat from the wall.
2. Use a pointed object to remove the battery.
3. Replace the battery.

Uponor Smatrix Wave T-169

Replace the battery of the thermostat when the low battery icon is shown in the display (alarm list).

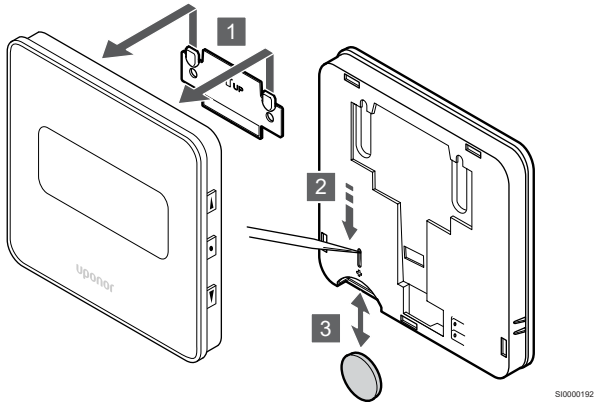

To change the battery:

1. Remove the thermostat from the wall.
2. Use a pointed object to remove the battery.
3. Replace the battery.

14.7 Factory reset

Note

Do not factory reset the thermostat if not absolutely needed.

Note

A factory reset removes the registration data from the thermostat.

Factory reset sets all parameter values to default settings.

Uponor Smatrix Wave T-161

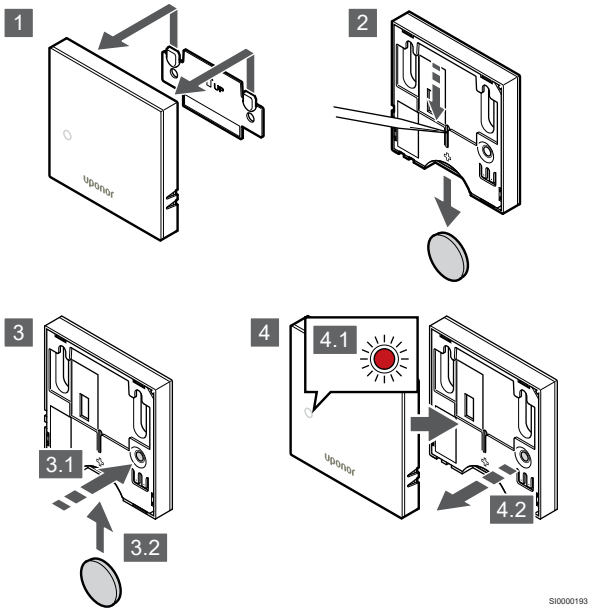

To factory reset the thermostat:

1. Remove the thermostat from the wall.
2. Remove the battery from the thermostat.
3. Press and hold the registration button on the thermostat while inserting the battery again.
4. Release the button after about 10 seconds when the LED start flashing.
5. The thermostat is now reset to factory default.

Uponor Smatrix Wave T-169

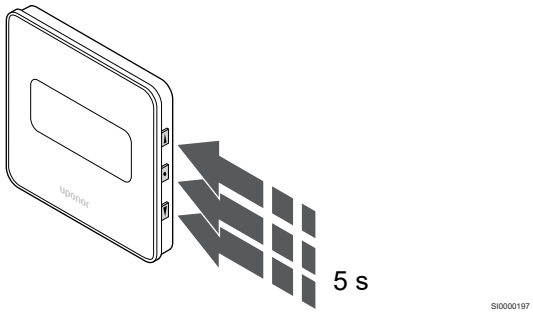

To factory reset the thermostat:

1. Press and hold the ▼, ▲ and **OK** buttons for about 5 seconds until the screen goes blank.
2. The thermostat is now reset to factory default.

13 Maintenance

13.1 Manual preventive maintenance

Warning!

Do not use any detergents to clean the Uponor Smatrix components.

The Uponor Smatrix room controller requires no preventive maintenance except cleaning:

1. Use a dry soft cloth to clean the components.

13.2 Automatic preventive maintenance

The Uponor Smatrix room controller is equipped with an automatic exercise function. This function consists of a test run designed to prevent the pump and actuators from seizing up due to inactivity.

This exercise is run every 6 days ±24 hours at random:

- The pump exercise is only run if the pump has not been run since the last exercise. During the exercise the pump is activated for 3 minutes.
- The actuator exercise is only run if the actuators have not been operated since the last exercise. The exercise periodically opens and closes the actuators.

If the system includes a communication module, the exercise function can be activated at any time using the Uponor Smatrix PULSE app.

13.3 Corrective maintenance

Fallback mode

If a thermostat is malfunctioning or not detected, the room controller executes the fallback mode to maintain the temperature in the room (heating mode only) until the problem is resolved.

Resetting the room controller

If the room controller does not work as expected, for example due to a hang-up, it can be reset to solve the problem:

1. Disconnect and reconnect the room controller to AC power.

14 Troubleshooting

14.1 General

This section describes general problems and alarms that can occur with the Uponor Smatrix system and describes solutions. A common cause of a problem though may be due to wrongly installed loops or mixed up thermostats.

Fluctuating floor temperature

Floor temperature is changing abnormally between hot and cold in heating mode

- Supply water temperature is too high
  - Check boiler or shunt
  - Run supply diagnostic test in the Uponor Smatrix PULSE app (requires communication module)

Room temperature does not match setpoint on thermostat, and actuators shut on/off on a fixed interval

- Heating fallback function is activated due to lost communication with thermostat
  - Check the connection of the room thermostat
  - Check batteries in room thermostat
  - Check the Uponor Smatrix PULSE app (requires communication module) for an error indicating that a thermostat has lost connection
  - Reconnect if the connection is lost

Room temperature does not match setpoint on thermostat

- The thermostat is placed in direct sunlight or close to other heat sources
  - Check placement of the thermostat according to installation instructions and change location if needed
- The thermostat is placed in the wrong room.
  - Check the placement of the thermostats and change rooms if needed.

The room is too cold (or too warm in cooling mode)

Thermostat setpoint is too low

- The thermostat setting is too low
  - Change the temperature setpoint
  - Use maximum and minimum settings in the Uponor Smatrix PULSE app (requires communication module) to protect the system from consequences of unreasonable temperature settings

The temperature displayed on the thermostat changes after the thermostat is moved

- The thermostat may be influenced by an external heat source
  - Change location of the thermostat

Installation report and room controller/channel numbering on the thermostat label doesn't match

- The thermostats of individual rooms are incorrectly registered
  - Place the thermostat in the correct room or change the thermostat registration in the room controller

White indicator cannot be seen in window of an actuator

- An actuator does not open
  - Replace the actuator
  - Contact the installer

Setpoint temperature displayed in the room information menu is lower than the temperature set on the thermostat

- Incorrect minimum/maximum limitation
  - Change the minimum/maximum limitation in the Uponor Smatrix PULSE app (requires communication module)

ECO mode

- ECO in room information menu
  - Change ECO profile or assign another profile to the room in the Uponor Smatrix PULSE app (requires communication module)
  - Reduce the ECO setback value for the thermostat

The room is too warm (or too cold in cooling mode)

Corresponding loop is warm even after a long period without heat call

- An actuator does not close
  - Contact the installer
  - Check that the actuator is correctly installed
  - Replace the actuator
- The actuator may still be in its initial factory default position (open).
  - Adjust setpoint temporarily to maximum setting so the acutators fully open (channel LED is red), to deactivate the default position.

The floor is cold

The room temperature OK but the floor is cold

- No heat demand from the underfloor heating system
- The room is heated by another heat source

All rooms are cold (or warm in cooling mode)

ECO mode symbol shown

- System in ECO mode
  - Change ECO profile or assign another profile to the room
  - Reduce the ECO setback value for the thermostat
  - Reduce the General ECO setback value in the Uponor Smatrix PULSE app (requires communication module)
  - Cancel temporary ECO

Check the chiller information and operation mode in the Uponor Smatrix PULSE app (requires communication module)

- The system is in cooling mode
  - Correct signal from external device needed

Check the boiler information and operation mode in the Uponor Smatrix PULSE app (requires communication module)

- The system is in heating mode
  - Correct signal from external device needed

Disturbing noise from the pump at the same time every week

- Change time for pump exercise in the Uponor Smatrix PULSE app (requires communication module)

No communication

Communication error

- Registration lost
  - Contact the installer
  - Check the registration status of the room controller
- Software versions incompatible
  - Check software versions of the Uponor components in the Uponor Smatrix PULSE app (or thermostat displays during startup)
  - Contact the installer
- The antenna is installed inside a metal cabinet, or too close to other shielding objects
  - Change the antenna location. If the problem persists, contact the installer
- The communication module is installed inside a metal cabinet, or too close to other shielding objects
  - Change the communication module location. If the problem persists, contact the installer
- The thermostat, thermostatic head, or relay module is placed too far from the communication module/antenna
  - Change the location of the communication module/ antenna, thermostat, thermostatic head, and/or relay module. If the problem persists, contact the installer

Communication failure between the room controllers

Communication error

- Registration to room controller is lost
  - Contact the installer
  - Check the registration status of the room controller
  - Check the room controller configuration
- The antenna is installed inside a metal cabinet, or too close to other shielding objects
  - Change the antenna location. If the problem persists, contact the installer
- The communication module is installed inside a metal cabinet, or too close to other shielding objects
  - Change the communication module antenna location. If the problem persists, contact the installer

14.2 Troubleshooting after installation

The system does not start

The power indicator in the room controller is off

- There is no AC power to the room controller
  1. Check that the room controller is connected to AC power
  2. Check the wiring in the 24V compartment
  3. Check that there is 115V AC power in the wall socket

There is 115V AC power in the wall socket

- Blown room controller fuse or faulty power cable
  - Replace the fuse and/or power cable and plug

Poor radio reception

Repeated radio alarms

- The antenna is installed inside a metal cabinet, or too close to other shielding objects
  - Change the antenna location. If the problem persists, contact the installer
- The communication module is installed inside a metal cabinet, or too close to other shielding objects
  - Change the communication module antenna location. If the problem persists, contact the installer
- Building structure unfavourable for radio transmission
  - Change the antenna location. If the problem persists, contact the installer

The thermostat is faulty

Channel LEDs in the room controller continue flashing

- The thermostat is not correctly positioned
  - Check the placement of the thermostat so the signal is not shielded by another object
- The room controller antenna is not correctly installed or positioned
  - Check the wiring and the antenna connection
- The room controller antenna is installed inside a metal cabinet, or too close to other shielding objects
  - Change the antenna location. If the problem persists, contact the installer
- The communication module is installed inside a metal cabinet, or too close to other shielding objects
  - Change the communication module antenna location. If the problem persists, contact the installer

External comfort/ECO switch doesn't work

The system doesn't switch between Comfort and ECO mode

- More than one Comfort/ECO switch is connected to the system (to the GPI and public thermostat system device)
  - Select one of the switches (either GPI or public thermostat system device) and uninstall the other one (only one swtich in the system is supported)

14.3 Digital thermostat alarms/ problems

An alarm is sent when more than 1 hours have elapsed since the room controller communicated with the thermostat.

Uponor Smatrix Wave T-169

Alarm symbols

The figure shows all possible symbols and characters that can be shown on the display:

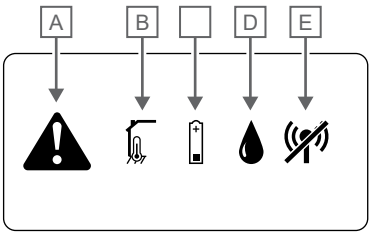

Item	Icon	Description
A		Alarm mode
B		Faulty indoor temperature sensor
		Faulty floor temperature sensor
		Faulty remote temperature sensor
		Faulty outdoor temperature sensor
C		Low battery indicator
D		Relative humidity limit reached (high limit) This symbol is only shown if cooling is active, and if RH control is be activated in the Uponor Smatrix PULSE app (requires communication module).
E		Communication fault indicator

Alarm icon is displayed

- An error has occured
  - Go to the alarm list for more information

Battery icon is displayed in the alarm list

- Thermostat battery power is running low
  - Replace the battery

The display is off

- The battery is discharged or wrong type of battery are used
  - Replace the battery
- The battery is installed incorrectly (reverse polarity)
  - Install the battery correctly

Radio transmission error icon is displayed in the alarm list

- The transmitter in the thermostat is faulty
  - Force the thermostat to transmit by changing the temperature setpoint
  - Replace thermostat

- Transmitter working with reduced signal intensity
  - Force the thermostat to transmit by changing the temperature setpoint
  - Replace thermostat
- The room controller antenna is installed inside a metal cabinet, or too close to other shielding objects
  - Change the antenna location. If the problem persists, contact the installer
- The communication module is installed inside a metal cabinet, or too close to other shielding objects
  - Change the communication module antenna location. If the problem persists, contact the installer
- New installations in building shield radio signals (for example, metal door safe)
  - Try to find a new position for the thermostat and/or the antenna, or, if possible, move the shielding object

Relative humidity icon is displayed in the alarm list

Note

RH control is activated in the Uponor Smatrix PULSE app (requires communication module).

- The relative humidity limit is reached
  - Lower the humidity level by increasing the ventilation or activating a dehumidifier

Floor temperature sensor icon is displayed in the alarm list

- Faulty temperature sensor
  - Check the connection of the floor sensor
  - Disconnect the temperature sensor and check it with an ohmmeter. Make sure the value aligns with the temperatuer sensor diagram, see *External temperature sensor resistance diagram, Page 105*
- Incorrect thermostat control mode, or temperature sensor not connected
  - Select correct thermostat control mode (settings menu 4)

Outdoor temperature sensor icon is displayed in the alarm list

- Faulty temperature sensor
  - Check the connection of the outdoor sensor
  - Disconnect the temperature sensor and check it with an ohmmeter. Make sure the value aligns with the temperatuer sensor diagram, see *External temperature sensor resistance diagram, Page 105*
- Incorrect thermostat control mode, or temperature sensor not connected
  - Select correct thermostat control mode (settings menu 4)

Indoor temperature sensor icon is displayed in the alarm list

- Faulty temperature sensor
  - Contact the installer or replace the thermostat

Remote temperature sensor icon is displayed in the alarm list

- Faulty temperature sensor
  - Check the connection of the remote sensor
  - Disconnect the remote temperature sensor and check it with an ohmmeter. Make sure the value aligns with the temperatuer sensor diagram, see *External temperature sensor resistance diagram, Page 105*
- Incorrect thermostat control mode, or temperature sensor not connected
  - Select correct thermostat control mode (settings menu 4)

External temperature sensor resistance diagram

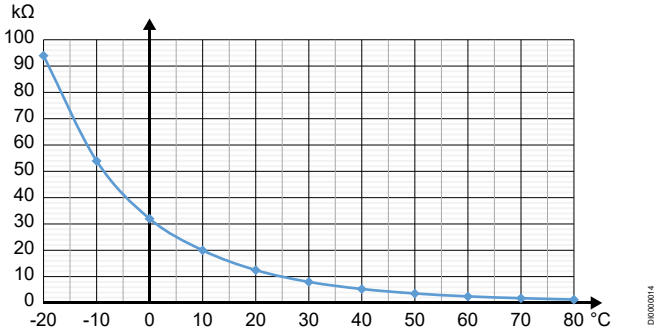

Temperature (°C)	Resistance (kΩ)
-20	94
-10	54
0	32
10	20
20	12.5
30	8
40	5.3
50	3.6
60	2.5
70	1.8
80	1.3

14.4 Analogue thermostat alarms/ problems

An alarm is sent when more than 1 hours have elapsed since the room controller communicated with the thermostat.

Uponor Smatrix Wave T-161

The LED on the thermostat flashes every two hours, or low battery alarm displayed in the Uponor Smatrix PULSE app (requires communication module)

- Thermostat battery power is running low
  - Replace the battery

No floor temperature limit settings available for the room where the thermostat is registered

- No floor temperature sensor is connected to the thermostat
  1. Connect the floor temperature sensor to the thermostat
  2. Remove the battery from the thermostat
  3. Wait about 30 seconds
  4. Insert the battery again

  The thermostat will now be configured with a floor sensor
- More than one hour had passed between startup of the thermostat, and the sensor being inserted
  1. Remove the battery from the thermostat
  2. Wait about 30 seconds
  3. Insert the battery again

  The thermostat will now be configured with a floor sensor

17.5 Communication module alarms/problems

Note

Setting up a system with a communication module requires a mobile device (smart phone/tablet).

See *Communication module LEDs, Page 80*, for more information about the communication module LED status.

Alarms shown in Uponor Smatrix PULSE app

If an alarm is triggered, it will be shown as an alert in the Uponor Smatrix PULSE app. Information about, and possible solutions are presented in the app. If connected to Uponor cloud services, the mobile phone will also receive the alarm as a push notification.

Thermostat lost

- The room controller is having problem communicating with the thermostat.

  Force the thermostat to transmit by changing the temperature setpoint.

  If the problem persists:

  - The thermostat is out of range. Try to find a new position for the thermostat and/or the room controller antenna, or, if possible, move any shielding objects
  - New installations in building shield radio signals (for example, metal door safe). Try to find a new position for the thermostat and/or the room controller antenna, or, if possible, move the shielding object
  - Low radio signal detected (sporadic communication with the connected unit). The transmitter is working with reduced signal intensity
  - The transmitter in the thermostat is faulty. Replace the thermostat

Thermostat battery level low

- The thermostat battery power is running low.

  Replace the batteries.

Low radio signal

- Low radio signal detected (sporadic communication with the connected unit).

  This may be due to one of the following probable causes:

  - The thermostat/thermostatic head is out of range
  - New installations in building shield radio signals (for example, metal door safe)
  - The transmitter is working with reduced signal intensity
  - The transmitter in the thermostat/thermostatic head is faulty

Solutions

- Force the thermostat/thermostatic head to transmit by changing the temperature setpoint.

  For thermostatic heads the setpoint must be changed on the room thermostat. Wait a couple of minutes, and make sure the thermostatic head shows (use the </> buttons) the same setpoint as the thermostat.
- Try to find a new position for the thermostat and/or the antenna, or, if possible, move the shielding object
- If nothing else works, replace the thermostat/thermostatic head.

Room controller lost (master room controller)

- Communication failure with the room controller. The room controller LED is flashing red.
  - Make sure the room controller is powered on.
  - Make sure that the communication cable between communication module and room controller is connected, and not damaged.
  - Restart the controller and communication module if a factory reset of the communication module has been performed (unplug and plug in the controller from the wall socket).

  Otherwise contact the installer.

Room controller lost (sub room controller)

- Communication failure with the room controller.
  - Make sure the room controller is powered on.
  - Make sure that the antenna is connected to the room controller is connected, and not damaged.
  - Try registering the sub room controller to the master room controller again.

  Otherwise contact the installer.

Communication error with communication module

- There is an communication error with the communication module. The room controller LED is flashing red.
  - Restart the controller and communication module (unplug and plug in the controller from the wall socket) and try again.

The communication module has lost communication with Uponor cloud services

This alarm will only be received as a push notification and/or SMS (if activated) to the mobile phone number registered to the customer account in Uponor cloud services.

- There is an communication error between the communication module and Uponor cloud services. The communication module LED is fixed red, or flashing orange.
  - Make sure the communication module is connected to an internet connected router, via either Wi-Fi or ethernet.
  - Make sure the communication module is connected to the room controller.
  - Restart the router if needed.
  - Restart the controller and communication module if needed (unplug and plug in the controller from the wall socket).

The communication module has re-established communication with Uponor cloud services

This alarm will only be received as a push notification and/or SMS (if activated) to the mobile phone number registered to the customer account in Uponor cloud services.

- The communication between communication module and Uponor cloud services is re-established, and the communication module LED is fixed green.

Software update failed

- The room controller software update has failed.
  1. Make sure all sub room controllers are within radio range, and not shielded by any object.
  2. Restart the room controller (power off and on again).

  Contact the installer if the problem persists.

Floor temperature limit reached

- The floor temperature is either too high or too low. This may be due to:
  - The floor is heated by the sun, or another heat source. Wait until the floor temperature is lowered.
  - The floor is cooled by a cool draft, or similar. Wait until the floor temperature is higher.
  - Too high supply temperature to the room. Review the heat source settings, if applicable.
  - Too low supply temperature to the room. Review the heat source settings, if applicable.
  - Too high setpoint for the room. Reduce the setpoint.
  - Too low setpoint for the room. Increase the setpoint.
  - Floor temperature limit to low. Increase the limit.

Faulty temperature sensor

- An error has been detected with the internal temperature sensor in the thermostat.

  Replace the thermostat.

Faulty external temperature sensor

- An error has been detected with the external sensor connected to the thermostat.
  - Make sure the correct thermostat control mode (settings menu 4) is set in the digital thermostat
  - Check the connection of the external sensor.
  - Disconnect the external sensor and check it with an ohmmeter. Make sure the value aligns with the temperatuer sensor diagram.

  If the error persists, replace the external sensor.

Faulty relative humidity sensor

Note

RH control is activated in the Uponor Smatrix PULSE app (requires communication module).

- An error has been detected with the internal relative humidity sensor in the thermostat.

  Replace the thermostat.

Faulty Comfort/ECO switch

- The room controller is having problem communicating with the system device configured as an external switch.

  Force the thermostat to transmit by opening/closing the external switch.

  If the problem persists:
  - The system device thermostat is out of range. Try to find a new position for the system device thermostat and/or the antenna, or, if possible, move any shielding objects
  - New installations in building shield radio signals (for example, metal door safe). Try to find a new position for the system device thermostat and/or the antenna, or, if possible, move the shielding object
  - Low radio signal detected (sporadic communication with the connected unit). The transmitter is working with reduced signal intensity
  - The transmitter in the system device thermostat is faulty. Replace the thermostat

Relative humidity sensor limit

Note

RH control is activated in the Uponor Smatrix PULSE app (requires communication module).

- The relative humidity limit is reached.

  Lower the humidity level by starting a dehumidifier or increasing the supply temperature setpoint.

Faulty outdoor temperature sensor

- An error has been detected with the outdoor temperature sensor connected to the public thermostat.
  - Check the connection of the outdoor temperature sensor.
  - Disconnect the external sensor and check it with an ohmmeter. Make sure the value aligns with the temperatuer sensor diagram.

  If the error persists, replace the external sensor.

Faulty heating/cooling supply sensor

- An error has been detected with the heating/cooling supply sensor connected to the public thermostat.
  - Check the connection of the heating/cooling supply sensor.
  - Disconnect the external sensor and check it with an ohmmeter. Make sure the value aligns with the temperatuer sensor diagram.

  If the error persists, replace the external sensor.

External heating/cooling switch lost

- The room controller is having problem communicating with the system device configured as an external switch.

  Force the thermostat to transmit by opening/closing the external switch.

  If the problem persists:
  - The system device thermostat is out of range. Try to find a new position for the system device thermostat and/or the antenna, or, if possible, move any shielding objects
  - New installations in building shield radio signals (for example, metal door safe). Try to find a new position for the system device thermostat and/or the antenna, or, if possible, move the shielding object
  - Low radio signal detected (sporadic communication with the connected unit). The transmitter is working with reduced signal intensity
  - The transmitter in the system device thermostat is faulty. Replace the thermostat

General systems alarm

- Check the external source connected to the GPI and investigate why the general systems alarm has tripped.

High supply temperature

This alarm is only shown if Supply diagnostics is running (the function requires connection to Uponor cloud services).

- The supply temperature is too high.

  Check the heat source, or supply temperature controller, to lower the supply temperature. Contact the installer if the problem persists.

Low supply temperature

This alarm is only shown if Supply diagnostics is running (the function requires connection to Uponor cloud services).

- The supply temperature is too low.

  Check the heat source, or supply temperature controller, to increase the supply temperature. Other possible causes may be too low flow on the supply line, or a malfunctioning circulation pump. Contact the installer if the problem persists.

Low average temperature

- Average temperature in the system is lower than set limit (se **Installer settings**).

  The average temperature is calculated using selected rooms (activated in room settings).

  This may be due to one of the following probable causes:
  - Thermostat setpoints are too low. Increase the setpoints on the thermostats in the rooms where the average temperature is calculated
  - The supply temperature is too low. Check the heat source, or supply temperature controller, to increase the supply temperature. Other possible causes may be too low flow on the supply line, or a malfunctioning circulation pump. Contact the installer if the problem persists
  - The average temperature limit is too low. Increase the average temperature limit
  - Other factors, such as opened windows/doors etc. Close doors/windows which might affect the measured temperature

Relay module lost

- Communication failure with the relay module.
  - Make sure the relay module is powered on.
  - Register the relay module again to the master room controller.

  Otherwise contact the installer.

The communication module does not start

- There is not power to the communication module.
  1. Check the communication cable between the room controller and communication module, make sure it is connected properly.
  2. Replace the communication cable if needed.
  3. Contact the installer or replace the communication module

Bad Wi-Fi connection

- The communication module looses connection with the Wi-Fi network.
  - Connect the communication module to the local network using an Ethernet cable.

    For more information see, *5. Connect the optional ethernet cable, Page 25*.

14.6 Room controller alarms/ problems

See *Controller LEDs, Page 76*, for more information about the room controller LED status.

The power LED and channel LED on the room controller flashes

- The antenna is out of position or a wire is disconnected
  - Install the antenna in a correct position with the cable correctly connected

14.7 Contact the installer

For installer contact information, see the installation report in the end of this document. Prepare the following information before contacting an installer:

- Installation report
- Drawings of the underfloor heating system (if available)
- List of all alarms, including time and date

14.8 Installer instructions

To determine if a problem is caused by the supply system or the control system, loosen the actuators from the manifold for the room concerned, wait a few minutes and check if the flow pipe of the underfloor heating loop becomes warm.

If the pipe does not become warm, the problem is in the heating system. If the loop becomes warm, the cause could be the room control system.

A supply system defect can be indicated by no warm water in the manifold. Check the boiler and circulation pump.

15 Technical data

15.1 Technical data

Thermostat	T-161 and T-169
IP	IP20, class III (IP: degree of inaccessibility to active parts of the product and degree of water)
Max. ambient RH (relative humidity)	85% at 20 °C
CE marking	
ERP	IV
Low voltage tests	EN 60730-1* and EN 60730-2-9***
EMC (electromagnetic compatibility requirements) tests	EN 60730-1 and EN 301-489-3
ERM (electromagnetic compatibility and radio spectrum matters) tests	EN 300 220-3
Power supply	1 x CR2032 3V
Voltage	2.4 V to 3.6 V
Rated impulse voltage	0.33 kV, OVC I
Pollution degree	2
Software class	A
Operating temperature	0 °C to +45 °C
Storage temperature	-10 °C to +65 °C
Radio frequency	912 MHz
Transmitter duty cycle	<1%
Connection terminals	0.25 mm² to 0.75 mm² solid, or 0.34 mm² to 0.5 mm² flexible with ferrules

Antenna	
IP	IP20, class III (IP: degree of inaccessibility to active parts of the product and degree of water)
Max. ambient RH (relative humidity)	85% at 20 °C
CE marking	
Power supply	From room controller
Radio frequency	912 MHz
Transmitter duty cycle	<1%
Receiver class	2

Communication module	R-208
IP	IP20, class III (IP: degree of inaccessibility to active parts of the product and degree of water)
Max. ambient RH (relative humidity)	85% at 20 °C
CE marking	
Low voltage tests	EN 60730-1* and EN 60730-2-9***
EMC (electromagnetic compatibility requirements) tests	EN 60730-1 and EN 301-489-3
ERM (electromagnetic compatibility and radio spectrum matters) tests	EN 300 220-3
Power supply	From room controller

Communication module	R-208
Pollution degree	2
Software class	A
Operating temperature	0 °C to +45 °C
Storage temperature	-20 °C to +70 °C
Wi-Fi connectivity	802.11 b/g/n @2.4Ghz
Wi-Fi security	WPA & WPA2
Radio frequency	912 MHz
Transmitter duty cycle	<1%
Receiver class	2
Connection terminals	RJ45 Ethernet connection (10/100BaseT)

Room controller	X-265
IP	IP20, class II (IP: degree of inaccessibility to active parts of the product and degree of water)
Max. ambient RH (relative humidity)	85% at 20 °C
CE marking	
ERP (with communication module and the Uponor Smatrix PULSE app)	VIII
ERP (without communication module and the Uponor Smatrix PULSE app)	IV
Low voltage tests	EN 60730-1* and EN 60730-2-9***
EMC (electromagnetic compatibility requirements) tests	EN 60730-1 and EN 301-489-3
ERM (electromagnetic compatibility and radio spectrum matters) tests	EN 300 220-3
Power supply	115 V AC +10/-15%, 50 Hz or 60 Hz
Internal fuse	T5 F3.15AL 250 V, 5x20 3.15A quick acting
Rated impulse voltage	2.5 kV, OVC II
Pollution degree	2
Software class	A
Operating temperature	0 °C to +45 °C
Storage temperature	-20 °C to +70 °C
Maximum consumption	45 W
Pump and boiler relay outputs	24 V AC +10/-15%, 24 V AC 8 A maximum Micro gap, normally open
General purpose input (GPI)	Only dry contact
Valve outputs	24 V AC, 0.2 A average, 0.4 A peak
Power connection	1 m flexible cord, with europlug (except UK), which is connected to the controller
Connection terminals for power, pump, GPI and boiler	Up to 4.0 mm² solid, or 2.5 mm² flexible with ferrules
Connection terminals for valve outputs	0.2 mm² to 1.5 mm²

*) EN 60730-1 Automatic electrical controls for household and similar use -- Part 1: General requirements

**) EN 60730-2-1 Automatic electrical controls for household and similar use -- Part 2-1: Particular requirements for electrical controls for electrical household appliances

***) EN 60730-2-9 Automatic electrical controls for household and similar use -- Part 2-9: Particular requirements for temperature sensing controls

15.2 Cable specifications

Cables	Standard cable length	Maximum cable length	Wire gauge
Cable from room controller to antenna	3 m	5 m	CAT.5e or CAT.6, RJ 45 connector
Cable from room controller to communication module	2 m	5 m	CAT.5e or CAT.6, RJ 45 connector
Cable from room controller to actuator	0.75 m	20 m	Room controller: 0.2 mm² to 1.5 mm²
External sensor cable to thermostat	5 m	5 m	0.6 mm²

Cables	Standard cable length	Maximum cable length	Wire gauge
Floor sensor cable to thermostat	5 m	5 m	0.75 mm²
Outdoor sensor cable to thermostat	-	5 m	Twisted pair
Cable from relay switch to room controller GPI input	2 m	20 m	Room controller: Up to 4.0 mm² solid, or 2.5 mm² flexible with ferrules Relay: 1.0 mm² to 4.0 mm²

15.3 Uponor Smatrix Wave PULSE room controller layout

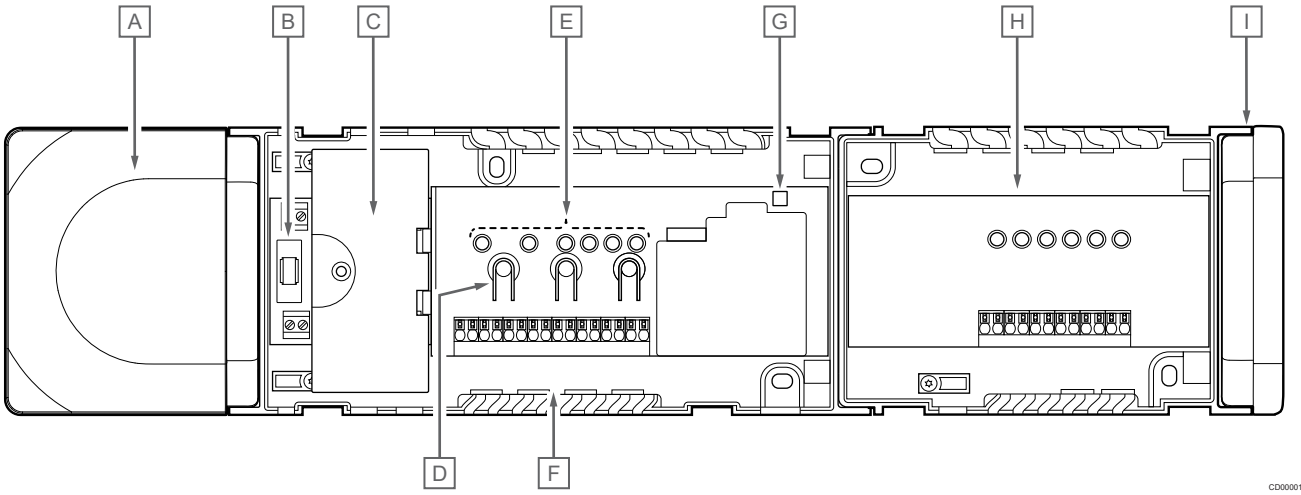

Item	Description
A	Transformer, 115 V AC 50 Hz power module
B	Fuse (T5 F3.15AL 250 V)
C	Optional inputs and outputs (pump and boiler management)
D	Channel registration buttons
E	LEDs for channels 01 – 06
F	Quick connectors for actuators
G	Power LED
H	Uponor Smatrix Wave M-262 (optional expansion module)
I	End cap

15.4 Wiring diagram

Uponor Smatrix Wave PULSE room controller

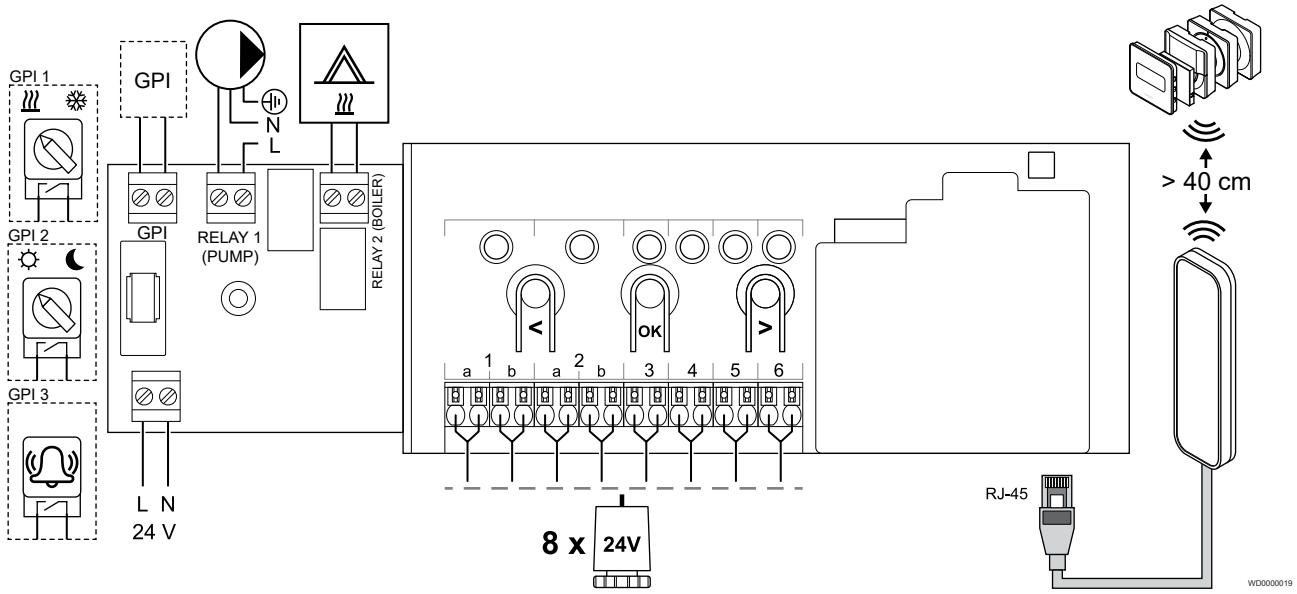

Uponor Smatrix Wave PULSE slave module

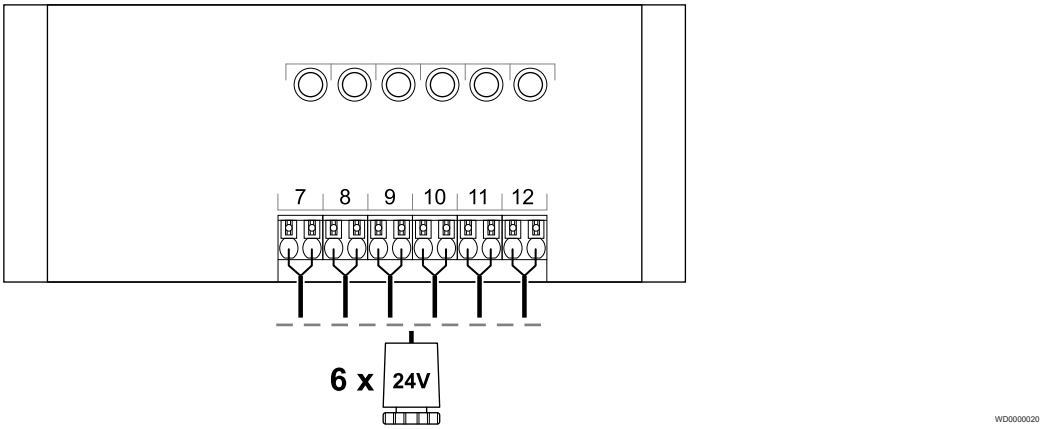

15.5 Dimensions

Uponor Smatrix Wave PULSE room controller

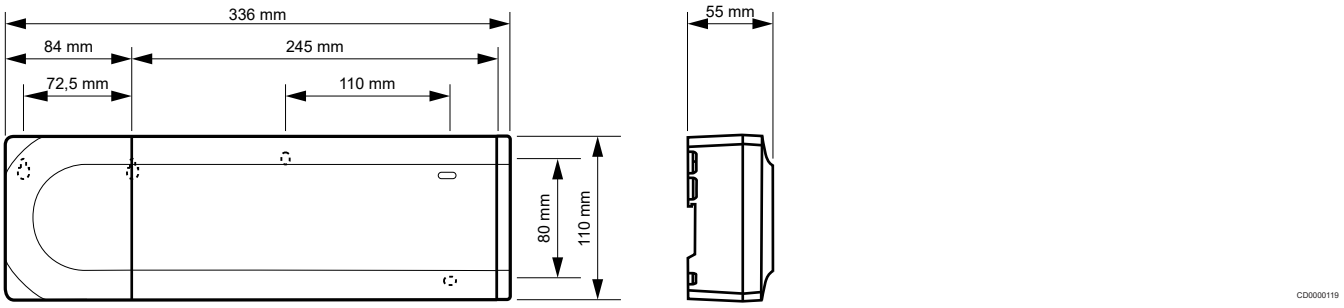

Uponor Smatrix Wave PULSE room controller and slave module

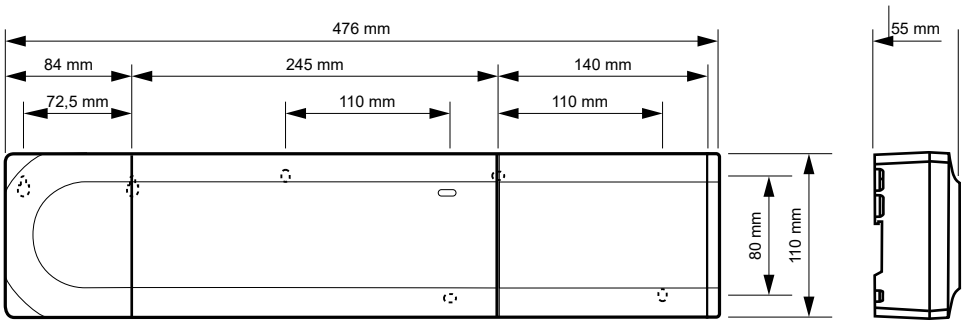

Communication module

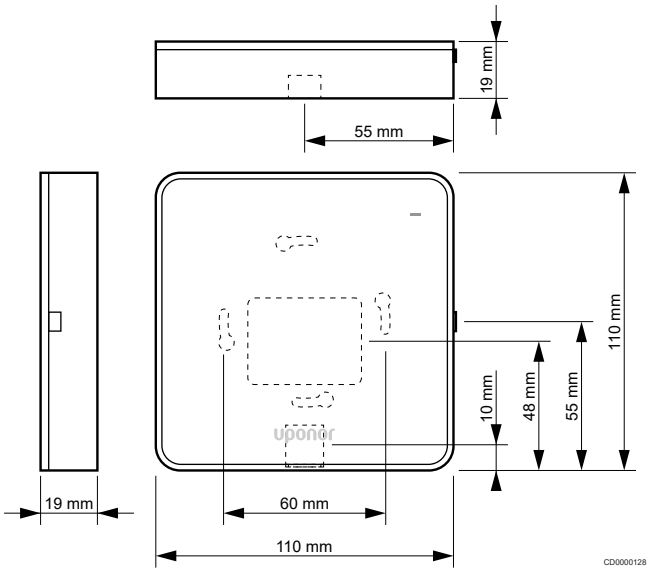

Thermostats

Uponor Smatrix Wave T-161

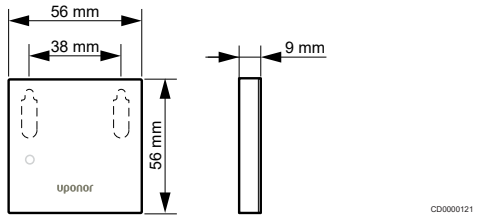

Uponor Smatrix Wave T-169

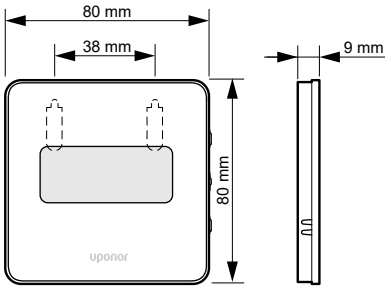

Uponor GmbH

Industriestraße 56,
D-97437 Hassfurt, Germany

1095344 04_2019_EN
Production: Uponor/MRY

Uponor reserves the right to make changes, without prior notification, to the specification of incorporated components in line with its policy of continuous improvement and development.

www.uponor.com