DeWalt US 48A
Hardwired Wallbox

User manual

985255 V1.0

Table of contents

1. IMPORTANT SAFETY INFORMATION 2

2. OVERVIEW 5

2.1 Product specifications 5

2.2 Indicated use 6

2.3 About this manual 6

2.4 Packing box list 6

3.THE USE OF CHARGING WALLBOX 7

3.1 Appearance introduction 7

3.2 Instructions for use 8

3.2.1 Inspection before use 8

3.2.2 Swiping card to charge 8

3.2.3 Branch Circuit Conductors and Ground Wire 8

3.2.4 Grounding Connections 8

3.2.5 Precautions for use 9

3.2.6 Connectivity 9

3.3 Indicator lamps description 9

3.4 Warning lamps description 10

4. ROUTINE MAINTENANCE 11

4.1 Electrical grounding 11

4.2 Appearance 11

5. CUSTOMER SERVICE 11

5.1 Preparations 11

5.2 Contact information 11

6. WARRANTY CARD 12

A. INSTALLATION INSTRUCTION 13

A.1 Requirements for installation environment 13

A.2 Requirements for environment 13

A.3 Requirements for wiring 13

A.4 Product installation 14

1 IMPORTANT SAFETY INFORMATION

Read all instructions before using this product. Save these instructions.

This manual contains important instructions for the DeWalt US 48A Hardwired Wallbox that shall be followed during installation, operation, and maintenance. Please review all warnings and cautions before installing and using the Wallbox.

WARNING: When using electric products, basic precautions should always be followed, including the following.

INSTRUCTIONS RELATING TO RISK OF FIRE OR ELECTRIC SHOCK

WARNING: Do not install or use the Wallbox near flammable, explosive, harsh, or combustible materials, chemicals, or vapors.

WARNING: Turn offpower at the circuit breaker before installing or cleaning the Wallbox.

WARNING: This product must be grounded. If it should malfunction or break down, grounding provides a path of least resistance for electric current to reduce the risk of electric shock. This product is equipped with a cord having an equipment grounding conductor and a grounding plug. The plug must be plugged into an appropriate outlet that is properly installed and grounded in accordance with all local codes and ordinances.

WARNING: Improper connection of the equipment-grounding conductor is able to result in a risk of electric shock. Check with a qualified electrician or serviceman if you are in doubt as to whether the product is properly grounded. Do not modify the plug provided with the product if it will not fit the outlet, have a proper outlet installed by a qualified electrician

WARNINGS

WARNING: This product can expose you to one or more chemicals that are known to the state of California to cause cancer.

WARNING: This device should be supervised when used around children.

WARNING: The Wallbox must be grounded through a permanent wiring system or an equipment-grounded conductor.

WARNING: Use the Wallbox only within the specified operating parameters.

WARNING: Never spray water or any other liquid directly at the wall mounted control box. Never spray any liquid onto the charge handle or submerge the charge handle in liquid. Store the charge handle in the dock to prevent unnecessary exposure to contamination or moisture.

WARNING: Do not use the Wallbox if it is defective, appears cracked, frayed, broken, or otherwise damaged, or fails to operate.

WARNING: Do not use the Wallbox if the flexible power cord or cable is frayed, broken, or otherwise damaged, or fails to operate.

WARNING: Do not attempt to disassemble, repair, tamper with, or modify the Wallbox. The Wallbox is not user serviceable. Contact DEWALT for any repairs or modification.

WARNING: When transporting the Wallbox, handle with care. Do not subject it to strong force or impact or pull, twist, tangle, drag, or step on the Wallbox, to prevent damage to it or any components.

WARNING: Do not touch the Wallbox end terminals with fingers or sharp metallic objects, such as wire, tools, or needles.

WARNING: Do not insert fingers or foreign objects into any part of the Wallbox.

WARNING: Do not forcefully fold or apply pressure to any part of the Wallbox or damage it with sharp objects.

WARNING: Use of the Wallbox may affect or impair the operation of any medical or implantable electronic devices, such as an implantable cardiac pacemaker or an implantable cardioverter defibrillator. Check with your electronic device manufacturer concerning the effects that charging may have on such electronic devices before using the Wallbox.

WARNING: Do not store in humid and outdoor environment.

CAUTIONS

CAUTION: Do not use private power generators as a power source for charging.

CAUTION: Incorrect installation and testing of the Wallbox could potentially damage the vehicle's battery, components, and/or the Wallbox itself. Any resulting damage is excluded from the New Vehicle Limited Warranty and the Charging Equipment Limited Warranty.

CAUTION: Do not operate the Wallbox in temperatures outside its operating range of -22˚ F to 122˚ F (-30˚ C to 50˚ C).

CAUTION: Wallbox should only be installed by personnel who are trained and qualified to work on electrical systems.

CAUTION: Ensure that Wallbox is within storage temperature when moving, transporting, or storing.

This device complies with Part 15 of the FCC Rules / Industry Canada licence-exempt · RSS standard(s). Operation is subject to the following two conditions: (1) this device may not cause harmful interference, and (2) this device must accept any interference received, including interference that may cause undesired operation.

Le présent appareil est conforme aux CNR d'Industrie Canada applicables aux appareils radio exempts de licence. L'exploitation est autorisée aux deux conditions suivantes : (1) l'appareil ne doit pas produire de brouillage, et (2) l'utilisateur de l'appareil doit accepter tout brouillage radioélectrique subi, même si le brouillage est
susceptible d'en compromettre le fonctionnement.

Changes or modifications not expressly approved by the party responsible for compliance could void the user's authority to operate the equipment.

This equipment has been tested and found to comply with the limits for a Class B digital device, pursuant to part 15 of the FCC Rules. These limits are designed to provide reasonable protection against harmful interference in a residential installation. This equipment generates uses and can radiate radio frequency energy and, if not installed and used in accordance with the instructions, may cause harmful interference
to radio communications. However, there is no guarantee that interference will not occur in a particular installation. If this equipment does cause harmful interference to radio or television reception, which can be determined by turning the equipment off and on, the user is encouraged to try to correct the interference by one or more of the following measures:
—Reorient or relocate the receiving antenna.
—Increase the separation between the equipment and receiver.
—Connect the equipment into an outlet on a circuit different from that
to which the receiver is connected.
—Consult the dealer or an experienced radio/TV technician for help.
To satisfy FCC / IC RF exposure requirements, a separation distance of 20 cm or more should be maintained between the antenna of this device and persons during device operation.
To ensure compliance, operations at closer than this distance is not recommended.

Les antennes installées doivent être situées de facon à ce que la population ne puisse y être exposée à une distance de moin de 20 cm. Installer les antennes de facon à ce que le personnel ne puisse approcher à 20 cm ou moins de la position centrale de l' antenne.
La FCC des éltats-unis stipule que cet appareil doit être en tout temps éloigné d'au moins 20 cm des personnes pendant son functionnement.

2 OVERVIEW

This manual applies to Wallbox identified by part number EV110D-48W.

2.1 Product Specifications

Voltage and Wiring	Nominal 192-264 V AC single-phase
Current Output Range	16 – 48 amps
Terminal Blocks	10-8 AWG (5.3 - 8.4 mm^2), copper only
Grounding Scheme	TN/C
Frequency	60 Hz
Cable Length	7.5m (24 ft)
Wallbox Dimensions	Height: 17.3 in (440 mm) Width: 11.1 in (280 mm) Depth: 7.4 in (189 mm)
Weight (including harness)	18 lb. (8.2 kg)
Operating Temperature	-22˚F to 122˚F (-30˚C to 50˚C)
Storage Temperature	-22˚F to 158˚F (-30˚C to 70˚C)
Enclosure Rating	Type 4
Ventilation	Not required
Means of Disconnect	External branch circuit breaker
Ground Fault Circuit Interrupter	Integrated, no additional required (CCID20)
Wi-Fi	2.4 GHz
Agency Approvals	CSAus

This device complies with part 15 of the FCC Rules. Operation is subject to the following conditions: (1) This device may not cause harmful interference, and (2) this device must accept any interference received, including interference that may cause undesired operation.

2.2 Indicated use

- ▶ This type of products is charging wallbo s that can be used to charge electric powered ehicles in indoor and outdoor areas e.g. electric ehicles
- ▶ When installing and connecting the charging wallbo the regulations of each country shall be obser ed.
- ▶ The indicated use of the e uipment includes in all cases compliance with the en ironmental conditions established for the e uipment.
- ▶ The e uipment is de eloped produced inspected and filed according to rele ant safety standards. Therefore if the instructions and safety technical notes for the indicated use are adhered under normal circum stances the product will not cause property damage or endanger human health.
- ▶ The instructions contained in this manual must be strictly followed otherwise safety ha ards may occur or cause the safety de ice to fail. Although the rele ant safety instructions are described in this manual it is still necessary to obser e the safety regulations and accident pre ention regulations for the respecti e application.
- ▶ ue to technical or legal restrictions this charging wallbo can only be used in USA.

2.3 About this manual

▶ Applicable e uipment type for this manual

a) AC charging wallbo

▶ This manual applies to the following groups of people

- nd customers charging wallbo users .
- Commissioning and ser ice technicians.

2.4 Packaging box list

No.	Name of the material	Quantity	Unit
1	ain body of the charging wallbo	1	Piece
2	etal bac plate	1	Piece
3	Installation it	1	Set
4	ser manual	1	Piece

3 THE USE OF CHARGING WALLBOX

3.1 Appearance introduction

3.2 Instructions for use

3.2.1 Inspection before use

Make sure that the product is not scratched, rusted, cracked, etc.
Make sure that there are no foreign objects inside the power plug and socket, vehicle plug and socket.
Do not charge if the surface of the socket is damaged, rusted, cracked or loose connection.

3.2.2 Using Wallbox

1. Open the vehicle charge port by pressing the button on the charge handle, pressing on the charge port door.
2. Insert the charge handle into the vehicle charge port.
3. Check the vehicle controls to verify charging.
4. To remove the charge handle from the vehicle, press and hold the button on the handle to unlock the charge port.

NOTE: The vehicle must be unlocked for the charge handle to be removable.

5. Remove the charge handle from the vehicle charge port.
6. Wrap the charge cable counter-clockwise around the Wallbox and insert the charge handle into the holster.

3.2.3 Branch Circuit Conductors and Ground Wire

Branch Circuit Conductors and Ground Wire

• If installing for less than maximum power, refer to local electrical code to select correct conductors and ground wire size that are suitable for the chosen circuit breaker.
• If installing for maximum power, use minimum 8 AWG, 90° C-rated copper wire for conductors.

NOTE: Upsize conductors if necessary.

• For sites with multiple Wall Connectors, each Wallbox must have its own branch circuit ith L1, L2/N, and Ground.
• COPPER WIRE TERMINATIONS ONLY for landing in Wallbox wirebox terminals. Conductors can be stranded or solid.
• Hardwire branch circuits to disconnects or circuit breakers. Do NOT install cord-and-plug type connections.
• For outdoor installations, use watertight fittings when securing feeder wires to the wirebox.

3.2.4 Grounding Connections

Grounding Connections

Wallbox must have a ground path back to the main equipment earthing point on site. Without a proper ground connection, the Wallbox will fault during a ground assurance test. Equipment-grounding conductor must be run with the circuit conductors and connected to the equipment-grounding terminal in the wirebox. Install a ground (PE) wire sized according to local electrical code.

3.2.5Precautions for use

Please do not unplug the charging gun when charging is not finished, otherwise there is a danger of electric shock!

3.2.6Connectivity

Wallbox is equipped with Wi-Fi to communicate with local site routers, vehicles, mobile devices, other Wallboxs, and other Tesla products.

Local Network

Connecting Wallbox to a local Wi-Fi network enables it to receive over-the-air firmware updates, remote diagnostics access, and usage data tracking capability. A Wi-Fi connection is required for sites that utilize authentication, billing, and other property management features.

Wallbox only supports WPA2/3-secured, 2.4 GHz, 802.11 infrastructure mode networks.

3.3 Indicator lamps description

Description	Liquid Crystal Display
Standby state	READY
Charging	CHARGING
Charging reservation/ Charging completed	CHARGING COMPLETE
Buttom restore	Reset Succes
Updating	UPDATING WIFI

3.4 Warning lamps description

Description	Liquid Crystal Display	Recommend solution
Under-voltage	E1 Under Voltage	The current power grid voltage is low, power off and wait for 5s to power on again. If the fault does not recover, please disconnect the power supply and contact customer service.
Overvoltage	E2 Over Voltage	Power off and wait for 5s to power on again. If the fault does not recover, please disconnect the power supply and contact customer service.
Primary overcurrent	E3 Over Current	Wait for 30s after the fault occurs. If the fault has not disappeared, power off and wait for 5s to power on again. If the fault does not recover, disconnect the power supply and contact customer service.
Ground fault	E4 Ground Fault	Power off and wait for 5s to power on again. If the fault does not recover, please disconnect the power supply and contact customer service.
Leakage fault	E5 Current Leakage	Wait for 45 minutes after the fault occurs. If the fault has not disappeared, cut off the power and contact customer service.
High-temperature derating charging/ Over temperature fault/ low temperature fault	E6 Over Temperature	The temperature of the wall box is too high. After the temperature decreases, power on again. If the fault does not recover, disconnect the power supply and contact customer service.
Relay fault	E7 Relay Failure	Power off and wait for 5s to power on again. If the fault does not recover, please disconnect the power supply and contact customer service.
Leakage self-check fault	E8 Failed Self-check	Power off and wait for 5s to power on again. If the fault does not recover, please disconnect the power supply and contact customer service.
APP fault	E9 Comm Fault	Power off and wait for 5s to power on again. If the fault does not recover, please disconnect the power supply and contact customer service.
Buttom Restore fault	E10 Reset Failed	The user cannot trigger the reset button. If this fault is reported when it is not triggered, please disconnect the power supply and contact customer service.
Vehicle contrilfault	E11 Diode Fault	The diode at the end of the car has failed. Please try another car. If the failure does not recover, please disconnect the power supply and contact customer service.
CP power fault	E12 CP Fault	Power off and wait for 5s to power on again. If the fault does not recover, please disconnect the power supply and contact customer service.

4 ROUTINE MAINTENANCE

4.1 Electrical grounding system

Electrical grounding is very important in electrical operation, and the safety of people and equipment mostly depends on the integrity and safety degree of grounding equipment. If the grounding equipment is not firm, unreliable, and does not meet the requirements of the regulations, it will inevitably cause potential safety hazards, and may endanger the safety of people and equipment at any time. Therefore, careful inspection and timely maintenance must be carried out to keep the grounding system operating in a safe state.

- Weekly routine inspection: Check whether the grounding of the equipment is loose, detached or altered. Carefully observe whether the grounding of the equipment is in good condition, the anti-loosening device is complete, and it is damaged or removed.
- Monthly routine inspection: Check whether the crimping part of the electrical grounding system is rusted or oxidized to cause poor contact, resulting in an increase in grounding resistance. Check whether the grounding mark is complete and obvious and there is any loss or damage. Check whether the components in the leakage protection box are loose, corroded or rusted.
- Annually routine inspection: The grounding of the electrical equipment shall be fully inspected every year to check whether the grounding wire and the grounding terminal are in good condition. Use a multimeter to check whether the grounding resistance exceeds the standard and it meets the grounding requirements.

4.2 APPEARANCE

Monthly routine inspection: Check whether the appearance of the electrical cabinet is stained, clean the whole electrical cabinet. Check whether the sheet metal of the electrical cabinet is deformed, rusted and the paintwork is damaged. If so, timely repair the paintwork and perform rust-proof treatment to modify the appearance.

5 CUSTOMER SERVICE

5.1 Preparations

5.2 Contact information

6 WARRANTY CARD

Product name	
Product model	
Warranty period	
User name	
Contact number	
Mailing address	

1. Within 7 days of purchase, if any performancefaultoccurred, you can choose to replace the product or repair it free of charge within the warranty; when you apply for a replacement, you need to provide the purchase invoice, warranty card, original product packaging box and other accessories included.

2. When applying for free warranty service during the warranty period, you need to present a valid purchase invoice and warranty card. The starting date of the warranty period is the purchase date indicated on the invoice. If you cannot present a valid purchase invoice, warranty card, or the information recorded in the above warranty certificate is inconsistent with the product, or has been altered and cannot be identified, the warranty period of the product shall be based on the manufacture date recorded for the product. If the valid product manufacture date cannot be obtained, the free warranty service will not be provided.

3. You need to keep the warranty card properl

From the date of installation, the quality assurance of equipment and installation works is 3 years, but does not include the following:

1. All man-made damage or transportation damag
2. Products disassembled and repaired by users and unauthorized service agencies.
3. Products with damage to the appearance caused by removing the seal label and improper use.
4. Fault or damage caused by use in a working environment that is not specified for the product, including exceeding the working load.
5. Fault and damage caused by improper storage by the use
6. The specific warranty policy is subject to the warranty terms in the contract signed by the OEM and the end customer.

The information provided in this manual is only for the general description and features of the product. With the upgrade of the product, the content in the text may deviate from the actual application. The final interpretation right belongs to our company.

A INSTALLATION INSTRUCTIONS

A.1 REQUIREMENTS FOR INSTALLATION ENVIRONMENT

- The installation location of the charging wallbox shall not be close to dangerous locations such as water pipes, gas pipes, and steam pipes.
- This device shall be mounted at a sufficient height from grade such that the height of the storage means for the coupling device is located between 600 mm (24 inches) and 1.2 m (4 feet) from grade.
- The installation location shall be convenient for charging, the wiring length shall be shortened when the line is laid, and the energy consumption of the cable resistance should be reduced.
- The installation location of the column type of the charging wallbox should not be set in a low-lying area where water is likely to accumulate or drip. The installation shall be vertical, and the center of gravity should not be too high to prevent overturning or tilting. The charging wallbox shall not be located in places with severe vibration or high temperature.
- There must be at least two contact points between the wall-mounted charging wallbox and the wall, the main body cannot be removed without tools. The installation wall shall be able to bear the weight of the charging wallbox and its accessories, and shall not be inclined after installation. The wall and internal wiring should not be too close.
- In order to facilitate inspection and maintenance by technicians, a certain space shall be reserved for the installation of charging wallbox, It shall comply with the Code for construction and completion acceptance of electric vehicle charging /battery swap infrastructure.
- Users need to install in strict accordance with the installation standards and requirements in this manual.

A.2 REQUIREMENTS FOR ENVIRONMENT

- Working ambient temperature: -30°C~50°C
- Relative humidity: 5% ~ 95% non-condensing
- Installation vertical inclination: ≤5%
- Installation and operation altitude: ≤2000 meters
- There is no strong vibration and shock in the place of use, and no strong current.

A.3 REQUIREMENTS FOR WIRING

- Recommended cable specifications: 3x8 AWG
  If the length of the incoming cable exceeds 40M (that is, the length of the cable connecting the power distribution cabinet to the wallbox), it is recommended to increase the diameter of the incoming cable to prevent excessive voltage drop, and the voltage drop of the incoming cable should not exceed 10V.

A.4 Product installation

1. Installation tools:

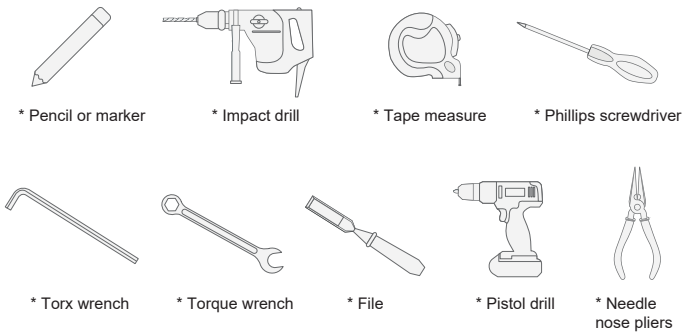

4. Installation steps (wall-mounted type)

4.1 Installation of the back plate

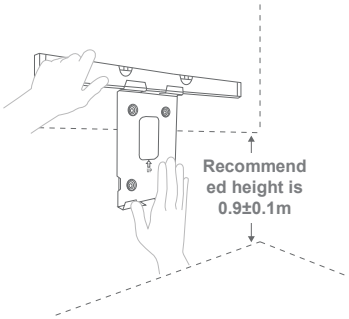

01

Using a spirit level to position the back plate.

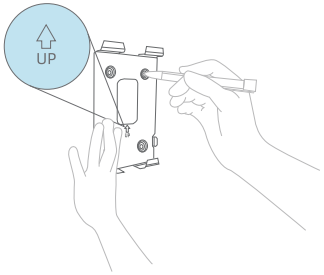

02

Mark the 4 screw holes with a pencil, pay attention to the installation direction of the back plate bracket.

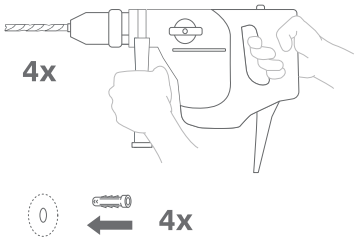

03

Use punching equipment such as an impact drill to make holes in the wall and insert expansion screw tubes.

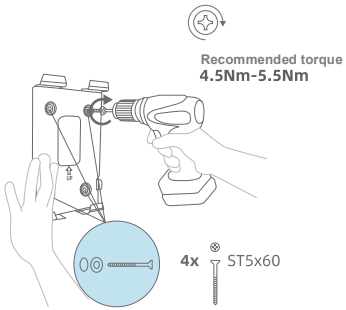

04

Install the metal back plate to the wall using expansion screws.

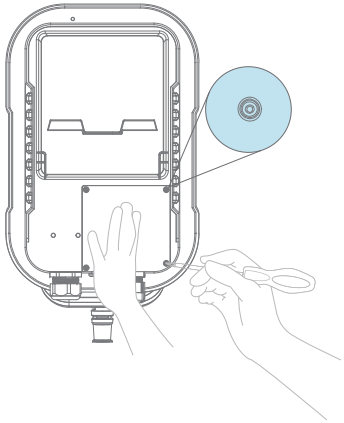

05

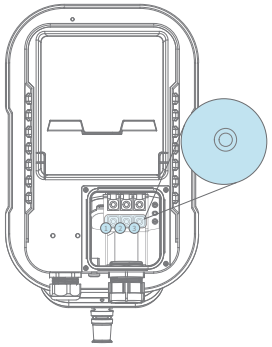

06

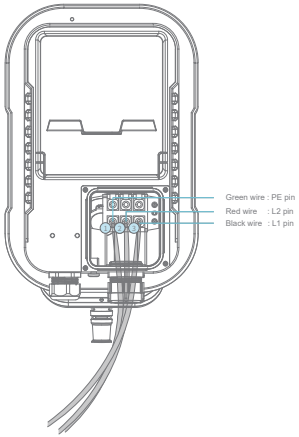

07

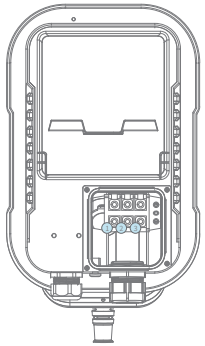

08

WARNING/AVERTISSEMEN

This device complies with Part 15 of the FCC Rules / Industry Canada licence-exempt
RSS standard(s). Operation is subject to the following two conditions: (1) this device may not cause harmful interference, and (2) this device must accept any interference received, including interference that may cause undesired operation.

Le présent appareil est conforme aux CNR d'Industrie Canada applicables aux appareils radio exempts de licence. L'exploitation est autorisée aux deux conditions suivantes : (1) l'appareil ne doit pas produire de brouillage, et (2) l'utilisateur de l'appareil doit accepter tout brouillage radioélectrique subi, même si le brouillage est susceptible d'en compromettre le fonctionnement.

Changes or modifications not expressly approved by the party responsible for compliance could void the user's authority to operate the equipment.

This equipment has been tested and found to comply with the limits for a Class B digital device, pursuant to part 15 of the FCC Rules. These limits are designed to provide reasonable protection against harmful interference in a residential installation. This equipment generates uses and can radiate radio frequency energy and, if not installed and used in accordance with the instructions, may cause harmful interference to radio communications. However, there is no guarantee that interference will not occur in a particular installation. If this equipment does cause harmful interference to radio or television reception, which can be determined by turning the equipment off and on, the user is encouraged to try to correct the interference by one or more of the following measures:
—Reorient or relocate the receiving antenna.
—Increase the separation between the equipment and receiver.
—Connect the equipment into an outlet on a circuit different from that
to which the receiver is connected.
—Consult the dealer or an experienced radio/TV technician for help.

Les modifications ou modifications non expressément approuvées par la partie responsable de la conformité pourraient annuler l'autorisation de l'utilisateur d'utiliser l'équipement. Cet équipement a été testé et il a été jugé conforme aux limites d'un appareil numérique de classe B, conformément à la partie 15 des règles de la FCC. Ces limites sont conçues pour fournir une protection raisonnable contre les interférences nocives dans une installation résidentielle. Cet équipement génère des utilisations et peut rayonner de l'énergie par radiofréquence et, s'il n'est pas installé et utilisé conformément aux instructions, peut causer des interférences nocives. Aux communications radio. Cependant, il n'y a aucune garantie que l'interférence ne se produira pas dans une installation particulière. Si cet équipement provoque des interférences nocives à la réception de la radio ou de la télévision, qui peuvent être déterminées en éteignant et en allumant l'équipement, l'utilisateur est encouragé à essayer de corriger l'interférence par une ou plusieurs des mesures suivantes :

—Réorienter ou déplacer l'antenne de réception.

—Augmenter la séparation entre l'équipement et le récepteur.

-Connectez l'équipement à une prise sur un circuit différent de celui-ci Auquel le récepteur est connecté.

-Consultez le concessionnaire ou un technicien en radio/télévision expérimenté pour obtenir de l'aide.

MPE Requirements

To satisfy FCC / IC RF exposure requirements, a separation distance of 20 cm or more should be maintained between the antenna of this device and persons during device operation.
To ensure compliance, operations at closer than this distance is not recommended.

Les antennes installées doivent être situées de facon à ce que la population ne puisse y être exposée à une distance de moin de 20 cm. Installer les antennes de facon à ce que le personnel ne puisse approcher à 20 cm ou moins de la position centrale de l’ antenne. La FCC des éltats-unis stipule que cet appareil doit être en tout temps éloigné d’ au moins 20 cm des personnes pendant son functionnement.