VEHICLE

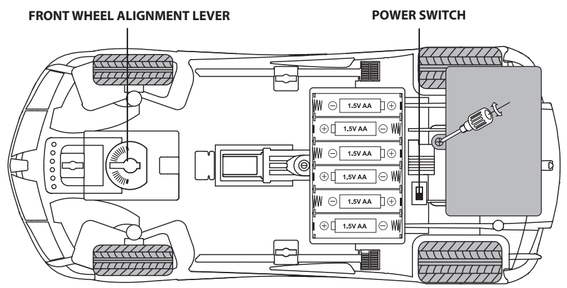

6 X 1.5V "AA" BATTERIES (NOT INCLUDED)

BATTERY REPLACEMENT:

VEHICLE

1. Turn the power switch to the OFF position.
2. Use a Phillips screwdriver to loosen and remove the screw of the battery compartment door as shown.
3. Open the battery compartment door.
4. Remove old batteries and replace with 6 new 1.5V "AA" batteries.
5. Close the battery compartment door and tighten the screw.

TRANSMITTER

1. Turn the power switch to the OFF position.
2. Use a Phillips screwdriver to loosen and remove the screw of the battery compartment door as shown.
3. Open the battery compartment door.
4. Remove old batteries and replace with 2 new 1.5V "AA" batteries.
5. Close the battery compartment door and tighten the screw.

HOW TO OPERATE:

- Install antenna to the transmitter.
- Turn the vehicle switch "ON".
- Push speed control stick forward (upwards) to drive forward.
- Push speed control stick backwards (downwards) to drive in reverse.
- Release speed control stick to neutral position to stop the vehicle.
- Steering to the left, right, or straight direction is controlled by the steering control stick.

WHEEL ALIGNMENT:

Adjust the lever under the chassis when the steering is not properly aligned.

PAGANI

OFFICIAL LICENSED PRODUCT

The trademarks "Pagani", "Huayra", "Zonda", "Utopia" and any other trademarks related to Pagani Group are registered trademarks and used pursuant to a license from PAGANI S.P.A., Italy

TRANSMITTER

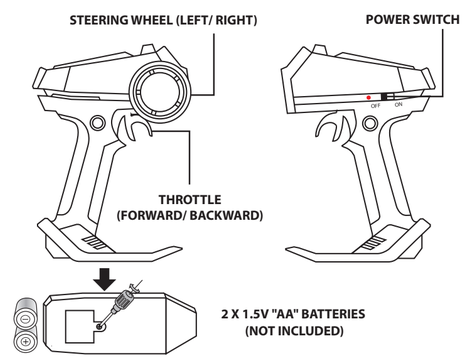

BATTERY CAUTION:

1. Rechargeable batteries are not recommended.
2. Alkaline batteries are recommended.
3. Non-rechargeable batteries are not to be recharged.
4. Rechargeable batteries are to be removed from the toy before being charged.
5. Rechargeable batteries are only to be charged under adult supervision.
6. Do not mix alkaline, standard (carbon-zinc), or rechargeable (nickel-cadmium) batteries.
7. Do not mix old and new batteries.
8. Only batteries of the same or equivalent types as recommended are to be used.
9. Batteries are to be inserted with the correct polarity.
10. The supply terminals are not to be short-circuited.
11. If batteries are loose, bend out the contacts for a tight fit.
12. Exhausted batteries must be removed from the toy and be disposed of immediately. Do not put the batteries in a fire.
13. Remove batteries from the toy when not in use.
14. Check the product periodically for signs of damage to electrical parts; do not play with product until damage has been properly assessed.

If the unit malfunctions, please remove the batteries for one minute and reinstall again.
If the malfunctions persist, please replace with new batteries.
Don't forget to remove batteries from the vehicle and transmitter when you have finished operating your vehicle.
BATTERIES SHOULD BE INSTALLED BY ADULTS ONLY.

Please keep this packaging for future reference. Colors, designs & contents may vary.
All rubber bands, plastic and wire ties, as well as tags, are not part of this toy and should be discarded for your child's safety. Remove wire ties before giving this toy to your child.

This device complies with part 15 of the FCC Rules. Operation is subject to the following two conditions:
(1) This device may not cause harmful interference, and (2) this device must accept any interference received, including interference that may cause undesired operation.

Warning: Changes or modifications to this unit not expressly approved by the party responsible for compliance could void the user's authority to operate the equipment.
NOTE: This equipment has been tested and found to comply with the limits for a Class B digital device, pursuant to Part 15 of the FCC Rules. These limits are designed to provide reasonable protection against harmful interference in a residential installation. This equipment generates, uses and can radiate radio frequency energy and, if not installed and used in accordance with the instructions, may cause harmful interference to radio communications. However, there is no guarantee that interference will not occur in a particular installation. If this equipment does cause harmful interference to radio or television reception, which can be determined by turning the equipment off and on, the user is encouraged to try to correct the interference by one or more of the following measures:
- Reorient or relocate the receiving antenna.
- Increase the separation between the equipment and receiver.
- Connect the equipment into an outlet on a circuit different from that to which the receiver is connected.
- Consult the dealer or an experienced radio/TV technician for help.

The device must not be co-located or operating in conjunction with any other antenna or transmitter.

The device has been evaluated to meet general RF exposure requirement.
The device can be used in portable exposure condition without restriction.

ALKALINE BATTERIES ARE RECOMMENDED.

1.5V "AA" X 8

Don't put in trash.
Recycle or dispose as hazardous waste.

Grandex Int'l Development Ltd.
P.O. Box 871
Port Washington NY 11050
Tel: 516-365-4111

Imported By:
BJ's Wholesale Club, Inc.
350 Campus Drive
Marlborough, MA 01752

GDX02010524S

SKU 325935
NO. 61070
MADE IN CHINA

8 83788 61071 1

VEHICLE

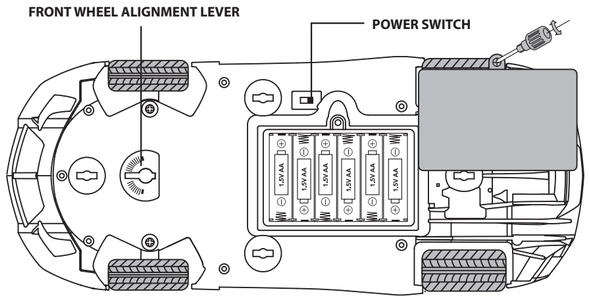

6 X 1.5V "AA" BATTERIES (NOT INCLUDED)

TRANSMITTER

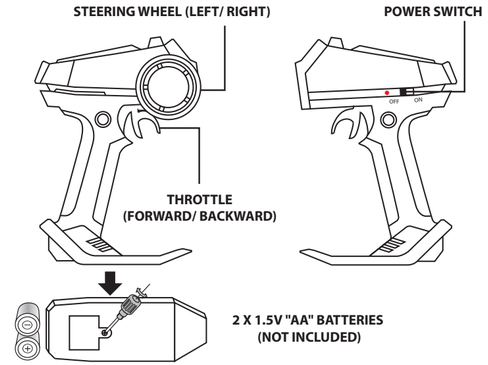

BATTERY REPLACEMENT:

VEHICLE

1. Turn the power switch to the OFF position.
2. Use a Phillips screwdriver to loosen and remove the screw of the battery compartment door as shown.
3. Open the battery compartment door.
4. Remove old batteries and replace with 6 new 1.5V "AA" batteries.
5. Close the battery compartment door and tighten the screw.

TRANSMITTER

1. Turn the power switch to the OFF position.
2. Use a Phillips screwdriver to loosen and remove the screw of the battery compartment door as shown.
3. Open the battery compartment door.
4. Remove old batteries and replace with 2 new 1.5V "AA" batteries.
5. Close the battery compartment door and tighten the screw.

HOW TO OPERATE:

- Install antenna to the transmitter.
- Turn the vehicle switch "ON".
- Push speed control stick forward (upwards) to drive forward.
- Push speed control stick backwards (downwards) to drive in reverse.
- Release speed control stick to neutral position to stop the vehicle.
- Steering to the left, right, or straight direction is controlled by the steering control stick.

WHEEL ALIGNMENT:

Adjust the lever under the chassis when the steering is not properly aligned.

THE "LAMBORGHINI" AND "LAMBORGHINI BULL AND SHIELD" TRADEMARKS, COPYRIGHTS, DESIGNS AND MODELS ARE USED UNDER LICENSE FROM AUTOMOBILI LAMBORGHINI S.P.A, ITALY. OFFICIAL LICENSEE: P&C INTERNATIONAL DEVELOPMENT LIMITED.

BATTERY CAUTION:

1. Rechargeable batteries are not recommended.
2. Alkaline batteries are recommended.
3. Non-rechargeable batteries are not to be recharged.
4. Rechargeable batteries are to be removed from the toy before being charged.
5. Rechargeable batteries are only to be charged under adult supervision.
6. Do not mix alkaline, standard (carbon-zinc), or rechargeable (nickel-cadmium) batteries.
7. Do not mix old and new batteries.
8. Only batteries of the same or equivalent types as recommended are to be used.
9. Batteries are to be inserted with the correct polarity.
10. The supply terminals are not to be short-circuited.
11. If batteries are loose, bend out the contacts for a tight fit.
12. Exhausted batteries must be removed from the toy and be disposed of immediately. Do not put the batteries in a fire.
13. Remove batteries from the toy when not in use.
14. Check the product periodically for signs of damage to electrical parts; do not play with product until damage has been properly assessed.

If the unit malfunctions, please remove the batteries for one minute and reinstall again.
If the malfunctions persist, please replace with new batteries.
Don't forget to remove batteries from the vehicle and transmitter when you have finished operating your vehicle.
BATTERIES SHOULD BE INSTALLED BY ADULTS ONLY.

Please keep this packaging for future reference. Colors, designs & contents may vary.
All rubber bands, plastic and wire ties, as well as tags, are not part of this toy and should be discarded for your child's safety. Remove wire ties before giving this toy to your child.

This device complies with part 15 of the FCC Rules. Operation is subject to the following two conditions:
(1) This device may not cause harmful interference, and (2) this device must accept any interference received, including interference that may cause undesired operation.

Warning: Changes or modifications to this unit not expressly approved by the party responsible for compliance could void the user's authority to operate the equipment.
NOTE: This equipment has been tested and found to comply with the limits for a Class B digital device, pursuant to Part 15 of the FCC Rules. These limits are designed to provide reasonable protection against harmful interference in a residential installation. This equipment generates, uses and can radiate radio frequency energy and, if not installed and used in accordance with the instructions, may cause harmful interference to radio communications. However, there is no guarantee that interference will not occur in a particular installation. If this equipment does cause harmful interference to radio or television reception, which can be determined by turning the equipment off and on, the user is encouraged to try to correct the interference by one or more of the following measures:
- Reorient or relocate the receiving antenna.
- Increase the separation between the equipment and receiver.
- Connect the equipment into an outlet on a circuit different from that to which the receiver is connected.
- Consult the dealer or an experienced radio/TV technician for help.

The device must not be co-located or operating in conjunction with any other antenna or transmitter.

The device has been evaluated to meet general RF exposure requirement.
The device can be used in portable exposure condition without restriction.

ALKALINE BATTERIES ARE RECOMMENDED.

1.5V "AA" X 8

Don't put in trash.
Recycle or dispose as hazardous waste.

0-3

Grandex Int'l Development Ltd.
P.O. Box 871
Port Washington NY 11050
Tel: 516-365-4111

Imported By:
BJ's Wholesale Club, Inc.
350 Campus Drive
Marlborough, MA 01752

GDX02010524S

SKU 325935
NO. 61070
MADE IN CHINA

8 83788 61021 6