StealthLock®

Regulatory Information

The user is cautioned that changes or modifications not expressly approved by CompX Timberline could void the user's authority to operate the equipment.

This device complies with Part 15 of the FCC Rules. Operation is subject to the following two conditions: (1) This device may not cause harmful interference, and (2) this device must accept any interference received, including interference that may cause undesired operation.

This equipment has been tested and found to comply with the limits for a Class B digital device, pursuant to Part 15 of the FCC Rules. These limits are designed to provide reasonable protection against harmful interference in a residential installation. This equipment generates, uses and can radiate radio frequency energy and, if not installed and used in accordance with the instructions, may cause harmful interference to radio communications. However, there is no guarantee that interference will not occur in a particular installation. If this equipment does cause harmful interference to radio or television reception, which can be determined by turning the equipment off and on, the user is encouraged to try to correct the interference by one or more of the following measures:

- Reorient or relocate the receiving antenna.
- Increase the separation between the equipment and receiver.
- Connect the equipment into an outlet on a circuit different from that to which the receiver is connected.
- Consult the dealer or an experienced radio/TV technician for help.

Copyright 2016 © CompX Security Products

StealthLock®

Instruction Manual

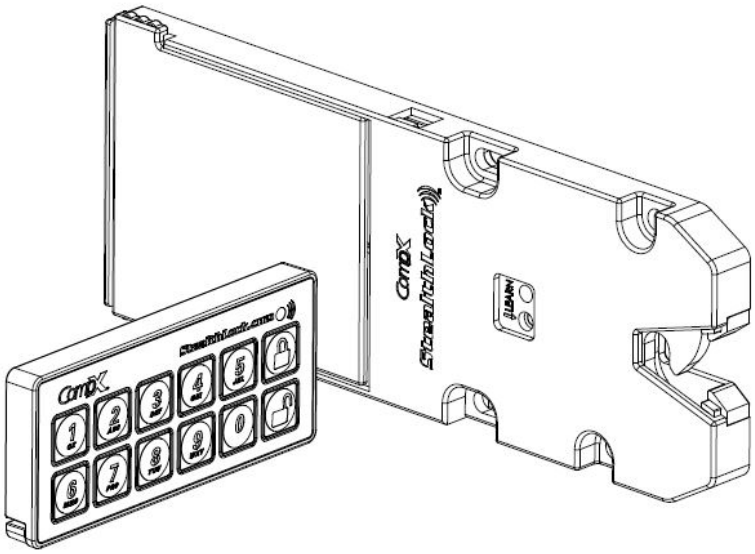

Thank you for purchasing StealthLock®. StealthLock® is an innovative solution for keyless invisible security. Using radio frequency technology, StealthLock® allows you to secure almost any wood cabinet door or drawer with little or no changes to the cabinet design.

StealthLock® is battery operated and works with a user established 4 to 8 digit code. Operation is simple: input your code and press lock or unlock. The Latch can operate any Receiver Latch within a 15 foot range which allows it to be placed anywhere, leaving no trace of visible hardware. In addition, the Latch can operate multiple Receiver Latches to secure an entire room or bank of cabinets.

StealthLock® is designed to install and program easily and offers:

Programmable user and supervisor codes
Programmable modes of operation
Programmable reset features

StealthLock® is recommended for use on cabinets made from:

Wood
Wood products
Phenolic resin
Glass

StealthLock® is NOT intended for:

Metal furnishings or cabinets
Exterior furnishings or cabinets
Applications where temperatures fall below 50° F or above 120° F

StealthLock® may be used in households to help protect minors from unsafe materials.

It is strongly recommended that all batteries used by the StealthLock® be replaced on an annual basis. Please mark this date on your calendars to insure replacement. In the event you have allowed the batteries to die, you will need to forcefully enter the cabinet. The StealthLock® strike plate is designed to shear away at 80lbs of force. A new strike plate will then be needed to operate the lock.

Transmitter Pad Mounting Accessories

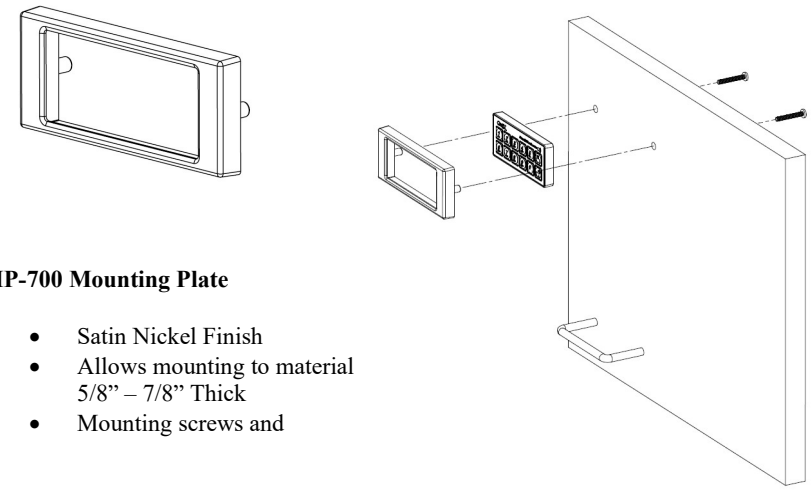

MP-700 Mounting Plate

- Satin Nickel Finish
- Allows mounting to material 5/8” – 7/8” Thick
- Mounting screws and

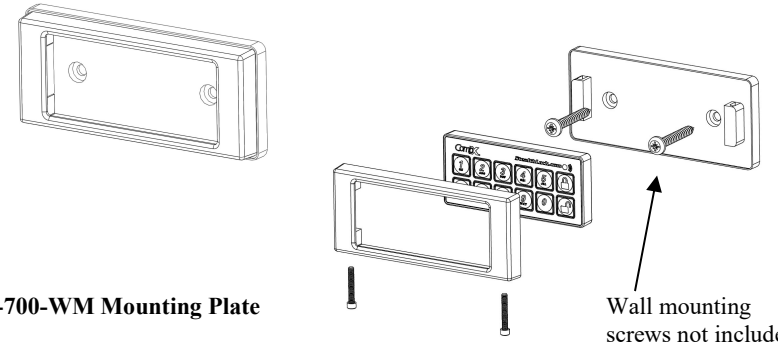

MP-700-WM Mounting Plate

- Satin Nickel Finish
- Allows mounting to any flat surface or wall

Auxiliary Power

If desired, the StealthLock® Receiver Latch may be connected to 120 VAC power using the optional RL-AP1 Power Supply

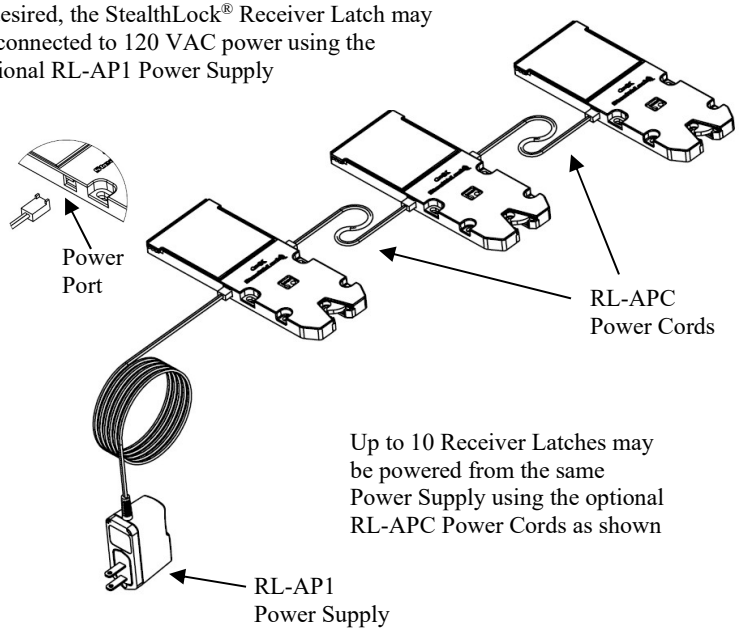

Up to 10 Receiver Latches may be powered from the same Power Supply using the optional RL-APC Power Cords as shown

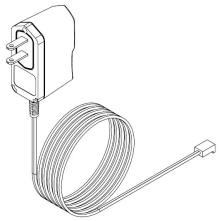

RL-AP1 Power Supply
(Includes 5-1/2 foot cord)

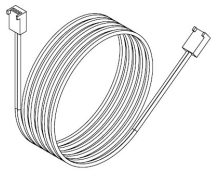

RL-APC-3 Power Cord – 3 foot
RL-APC-5 Power Cord – 5 foot
RL-APC-10 Power Cord – 10 foot

SL-100 StealthLock® Contents

1 – RL-100
Receiver Latch
Screws Included

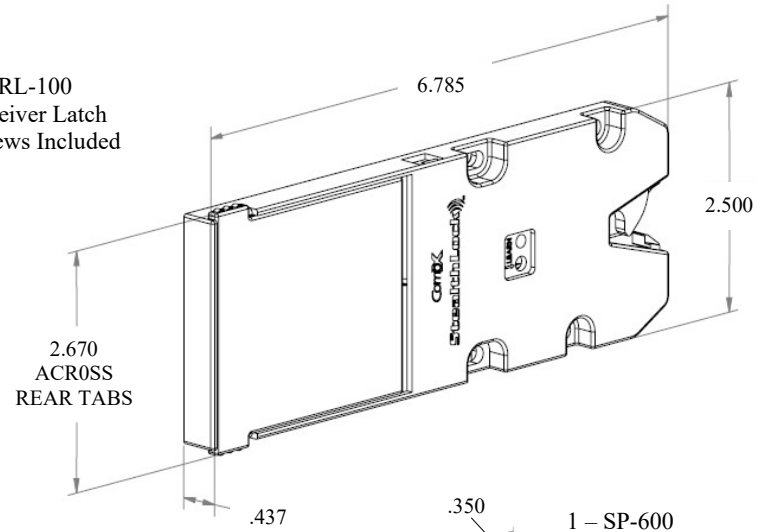

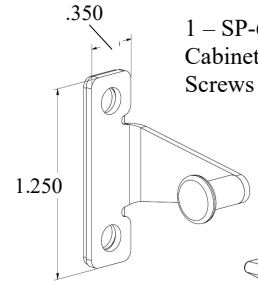

1 – SP-600
Cabinet Strike Plate
Screws Included

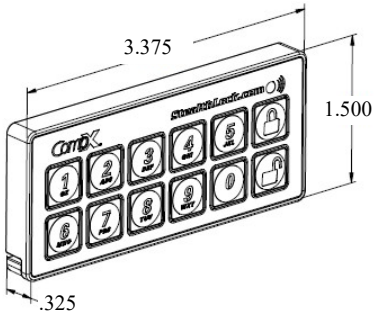

1 – TP-101
Transmitter Pad
CR2032 Battery Included

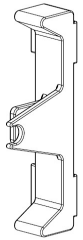

1 – TL-600
Installation Tool

Battery Installation – Receiver Latch

The Receiver Latch uses 4 AAA batteries that are expected to last 2 years in normal operation (4 open/close cycles per day).

Batteries should be replaced on an annual basis to insure continued reliability.

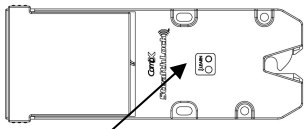

The LED will begin to blink after 5,500 operations to warn that batteries need to be replaced

While gripping the rear tabs, slide the battery housing in and up as shown

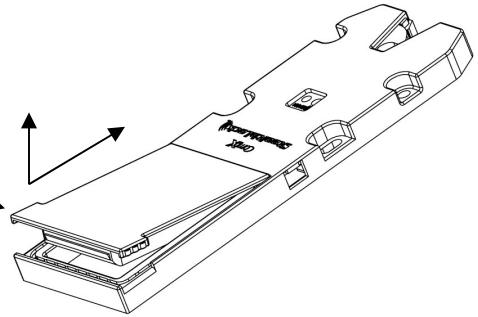

Slide the battery housing back until it is completely free of the Receiver Latch

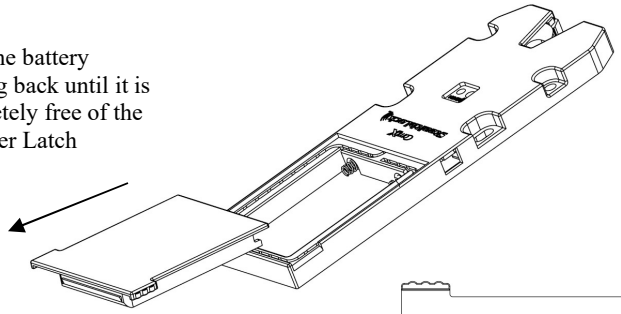

Install four AAA batteries in the slots indicated on the back of the battery housing.

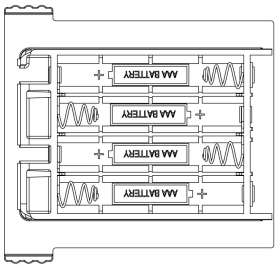

Clear User Pin Code

This feature returns the user code back the factory default setting of 0000. It does not reset any other mode or feature of the lock.

There is a 60 second programming time limit to each step. If you time out or make an error, programming will end and you will need to restart from step 1.

1. We suggest reading through instructions prior to beginning programming
2. Press and hold the Receiver Latch learn button until the yellow LED begins a **three blink** pattern
3. Enter the Supervisor pin code and press the **Unlock** button
4. Enter **8888** and press the **Lock** button
5. If successful the green LED will flash twice on the Receiver Latch
6. Continue programming or enter **9999** followed by pressing the **Lock** button to exit Learn Mode
7. Test lock function to make sure user default setting is restored. Lock can now be programmed with a new user code

Reset Factory Default Settings

This feature returns the lock to its original factory settings. This will place the Receiver Latch into a Non Single Use Mode, Passage Mode, and Learn Enable Mode. It does not reset the user or supervisor code.

There is a 60 second programming time limit to each step. If you time out or make an error, programming will end and you will need to restart from step 1.

1. We suggest reading through instructions prior to beginning programming
2. Press and hold the Receiver Latch learn button until the yellow LED begins a **three blink** pattern
3. Enter the Supervisor pin code and press the **Unlock** button
4. Enter **4444** and press the **Lock** button
5. If successful the green LED will flash twice on the Receiver Latch.
   *Note that if Single Use mode was exited, the user pin code will default to **0000***
6. Continue programming or enter **9999** followed by pressing the **Lock** button to exit Learn Mode
7. Test lock function to make sure default settings are restored

Battery Installation - Transmitter Pad

The Transmitter Pad uses a CR2032 battery that is expected to last 2 years in normal operation (4 open/close cycles per day).

Batteries should be replaced on an annual basis to insure continued reliability.

The LED will begin to blink after 5,500 operations to warn that batteries need to be replaced

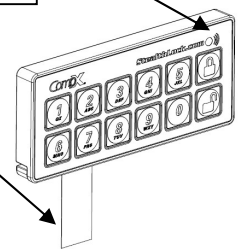

During initial installation, remove the red ribbon to activate the installed battery

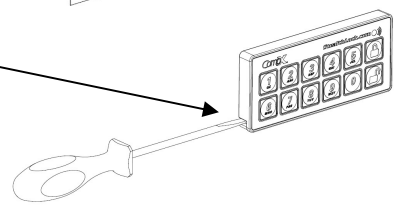

To replace the battery, insert a small flat blade screwdriver into the battery tray slot as shown

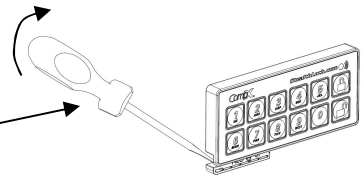

Rotate the Screwdrive up (clockwise) as shown to release the battery tray.

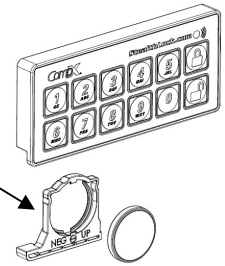

Replace old battery with fresh CR2032 making sure that the positive (+) side of the battery is facing down in the battery tray

Slide the battery tray back into the transmitter housing and snap into place

Installation Instructions – Receiver Latch

The StealthLock® is designed to operate within non-metallic cabinetry. Use with other materials may limit or prohibit operation of the lock. We recommend testing the lock if using in a material other than wood. Batteries should be installed before installation.

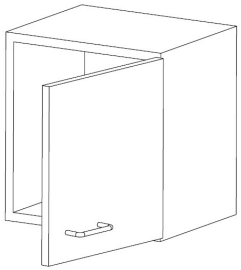

The SL-100 StealthLock® kit is designed for mounting in cabinets with solid panel construction and full overlay doors. An **INSTALLATION VIDEO** and tips for mounting this kit in other cabinet types can be found at www.stealthlock.com

Step #1 - Position the Receiver Latch with strike plate and installation tool attached as shown. The front tabs on the installation tool should contact the front edge of the cabinet

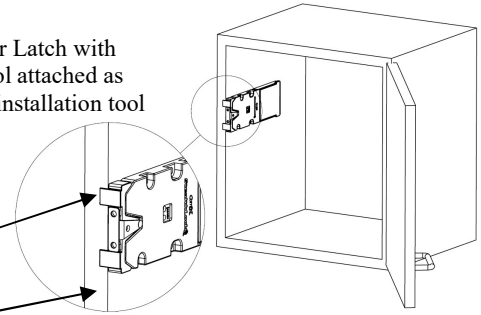

Step #2 - Screw the Receiver Latch in place using 2 of the #6 x ½" screws supplied, in the front side of the oval holes. If attaching to material less than ¾" thick, alternate fasteners may be required.

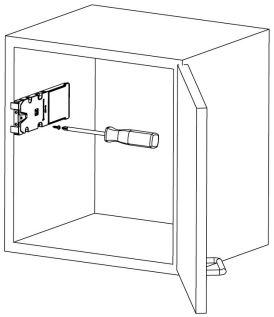

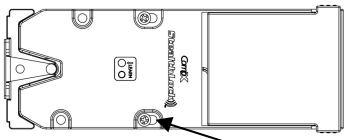

Start with Screws in Front Side of Oval Holes

Programming Learn Disable / Learn Enable

Learn Disable / Learn Enable Mode allows the supervisor to either allow or not allow a **user** to program a new user code. In Learn Disable Mode, only the users with knowledge of the supervisor code can make any programming changes.

There is a 60 second programming time limit to each step. If you time out or make an error, programming will end and you will need to restart from step 1.

1. We suggest reading through instructions prior to beginning programming
2. Press and hold the Receiver Latch learn button until the yellow LED begins a **three blink** pattern
3. Enter the Supervisor pin code and press the **Unlock** button

   Then either

   a. Set **Learn Disable**, enter **3333** and press the **Lock** button

   Or

   b. Set **Learn Enable**, enter **3333** and press the **Unlock** button
4. If successful the green LED will flash twice on the Receiver Latch
5. Continue programming or enter **9999** followed by pressing the Lock button to exit Learn Mode
6. Test lock function for new mode operation. If Learn Disable has been set, the Receiver Latch should automatically go to a three blink pattern when the learn button is pushed and held.

Programming Self Lock Mode / Passage Mode

Self Lock Mode automatically relocks the Receiver Latch after pressing the unlock button when a valid user or supervisor code is presented. The delay time before re-locking the Receiver Latch can be set between 2 and 60 seconds. Passage Mode keeps the Receiver Latch in an unlocked position after unlocking.

There is a 60 second programming time limit to each step. If you time out or make an error, programming will end and you will need to restart from step 1.

1. We suggest reading through instructions prior to beginning programming
2. Press and hold the Receiver Latch learn button until the yellow LED begins a **three blink** pattern
3. Enter the Supervisor pin code and press the **Unlock** button

   Then either

   a. Set **Self Lock**, enter **2222XX** and press the **Lock** button
   Note that this command is ignored if Single Use mode is set
   XX represents the number of seconds of delay time before relocking
   For example entering 222215 would result in a 15 second delay

   Or

   b. Set **Passage Mode**, enter **2222** and press the **Unlock** button
4. If successful the green LED will flash twice on the Receiver Latch
5. Continue programming or enter **9999** followed by pressing the **Lock** button to exit Learn Mode
6. Test lock function for proper operation

Step #3 – Press the learn button on the Receiver Latch until the yellow LED lights to insure that the Latch is in the open position

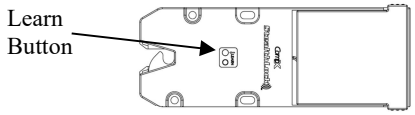

Step #4 – Remove release paper from the back of the strike plate

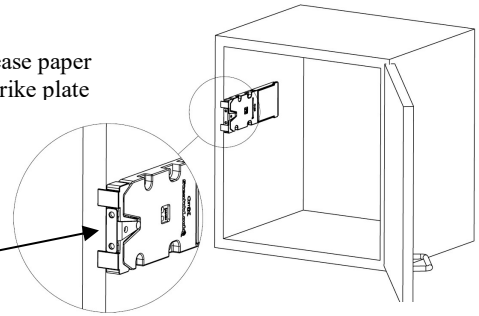

Step #5 – Close door firmly and open it again. The strike plate will become affixed to the door in the proper mounting position. Remove and discard red installation tool

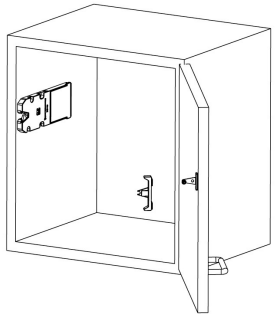

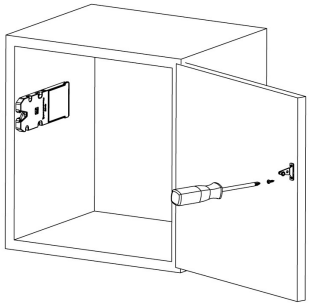

Step #6 - Screw the strike plate in place using 2 of the #6 x ½" screws supplied. If attaching to material less than ¾" thick, alternate fasteners may be required.

Step #7 – Check the fit after any bumpers are installed. Door should latch into the Receiver Latch and still have a little free play. Adjust Receiver Latch forward on oval holes as required.

Finish by installing the remaining screws at the front of the Receiver Latch

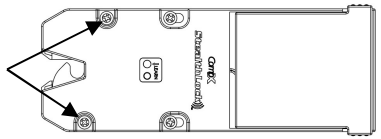

Installation Instructions – Transmitter Pad

The Transmitter Pad has a functional range of 15 feet from the Receiver Latch and can be mounted virtually anywhere on any non-metallic panel. To mount, simply remove the release paper from the tape on the back side of the Transmitter Pad, and press into place.

Suggested mounting areas

- Cabinet door face or drawer face
- Wall above switch plate
- Inside unlocked cabinet door or drawer to be hidden

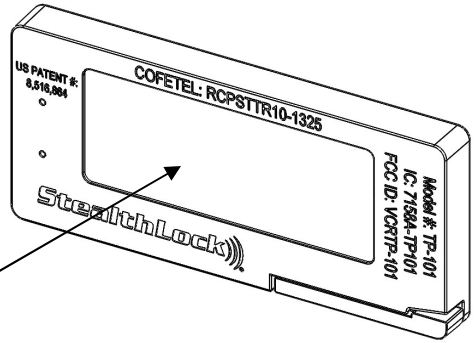

Remove release paper from tape

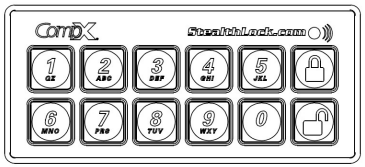

StealthLock® features several modes of operation and reset ability. These functions can be changed using the following instructions by users who have rights to the supervisor code. **Modes and reset can only be modified with knowledge of the supervisor code.**

Programming Single Use Mode / Non Single Mode

Non Single Mode allows the user to set the user code to be used by a single person only. Single Use Mode allows for a revolving user code so the lock maybe used by multiple people without having to reprogram the Receiver Latch each time.

There is a 60 second programming time limit to each step. If you time out or make an error, programming will end and you will need to restart from step 1.

1. We suggest reading through instructions prior to beginning programming
2. Press and hold the Receiver Latch learn button until the yellow LED begins a **three blink** pattern
3. Enter the Supervisor pin code and press the **Unlock** button

   Then either

   a. Set **Single Use Mode**, enter **1111** and press the **Lock** button
   Note that this will cancel self lock mode if it has been set

   Or

   b. Set **Non Single Use Mode,** enter **1111** and press the **Unlock**
   *Note that the user code resets to **0000** when Single Use Mode is exited*
4. If successful the green LED will flash twice on the Receiver Latch
5. Continue programming or enter **9999** followed by pressing the **Lock** button to exit Learn Mode
6. Test lock function for proper operation

Programming the Supervisor Code

Use these steps to change the current supervisor code. The supervisor code allows the owner of the StealthLock® to overwrite the user code and change operational modes**.** The factory default supervisor code is **071856**. **It is highly recommended that the supervisor code be changed.** Supervisor codes must be 4 to 8 digits in length. To view a video of these steps, go to www.stealthlock.com .

There is a 60 second programming time limit to each step. If you time out or make an error, programming will end and you will need to restart from step 1.

1. We suggest reading through instructions prior to beginning programming.
2. Press and hold the Receiver Latch learn button until the yellow LED begins a **two blink** pattern
3. Enter the current supervisor code using the Transmitter Pad and press the **Unlock** button
4. Wait for green light on the Transmitter Pad to turn off then enter the new supervisor code and press the **Lock** button
5. Wait for green light on the Transmitter Pad to turn off then re-enter your new supervisor code and press the **Lock** button to secure code
6. If successful, the green LED light on the Receiver Latch will stay illuminated for 3 seconds
7. Once the green LED light has turned off, the Receiver Latch will automatically exit the learn mode
8. Test lock function with new code
9. We recommend writing down your new code in the back of these instructions and storing in a safe area. The supervisor code is not resettable if it has been forgotten.

Programming – Introduction

StealthLock® is very easy to use and operate. Once installed, the user enters the user code (factory default 0000) and presses **Lock** to lock the cabinet**.** To unlock the cabinet, the user enters the user code and presses **Unlock** and the cabinet will open.

StealthLock® is fully programmable allowing the user or supervisor the ability to change codes, modes, and restore lock settings. While the StealthLock® is easy to program, we highly recommend reading the complete programming instructions prior to making any changes. Remember to keep track of any changes made in a secure location.

Key locations and indicator lights referenced in the programming instructions are shown below.

RL-100 Receiver Latch

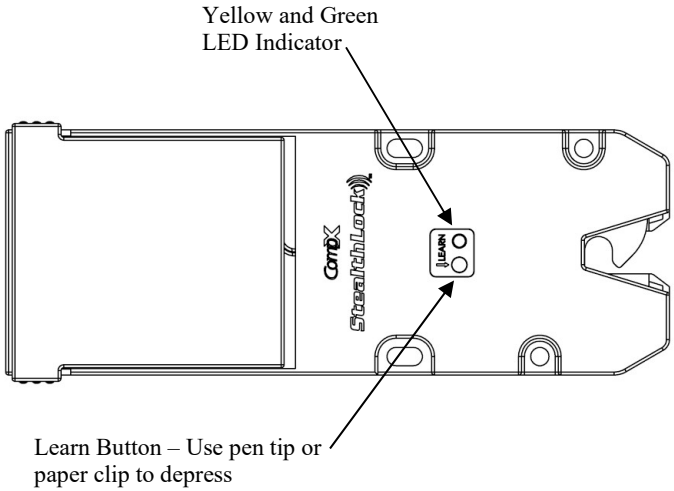

Programming – Introduction

TP-101 Transmitter Pad

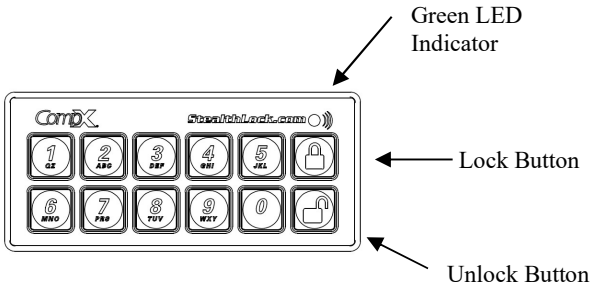

Please note the following:

- StealthLock® will reset to an unlocked position whenever the learn button is pressed.
- Only one Transmitter Pad should be used for programming in a given area at any one time. The StealthLock® is a radio frequency device and the use of multiple Transmitter Pads in the same area may result in interference and improper programming.
- After pressing Lock or Unlock, the Green LED on the Transmitter Pad will light for about 2 seconds indicating that a transmission is in progress.
- While the Green LED on the Transmitter Pad is lit, the keypad will not respond to any other entries until the transmission is completed.
- If the Green LED on the Transmitter Pad flashes rapidly after pressing Lock or Unlock, this indicates that an improper code has been entered. Codes must always be 4 to 8 digits in length.
- If the LED indicator on the Receiver Latch flashes Green/Yellow, this indicates that an improper code as been received. Start the learning function over taking care to enter the correct codes.

Programming the User Code

Use these steps to change your current user code. The factory default code is **0000**. User codes must be 4 to 8 digits in length. To view a video of these steps, go to www.StealthLock.com *Note that the user code can not be changed if the Receiver Latch has been set to Single Use Mode.*

There is a 60 second programming time limit to each step. If you time out or make an error, programming will end and you will need to restart from step 1.

1. We suggest reading through the instructions prior to beginning programming
2. Press and hold the Receiver Latch learn button until the yellow LED light begins **a one blink** pattern, then release
3. Using the Transmitter Pad enter the current user code and press the **Unlock** button
4. Wait for green light on Transmitter Pad to turn off then enter the new user code and press the **Lock** button
5. Wait for green light on Transmitter Pad to turn off then re-enter the new user code and press the **Lock** button to secure code
6. If successful, the green LED light on the Receiver Latch will stay illuminated for 3 seconds
7. Once the green LED light has turned off, the Receiver Latch will automatically exit the learn mode
8. Test lock function with new code
9. We recommend writing down your new code in the back of these instructions and storing in a safe area