AP11

Miniature K-band Microwave Sensor

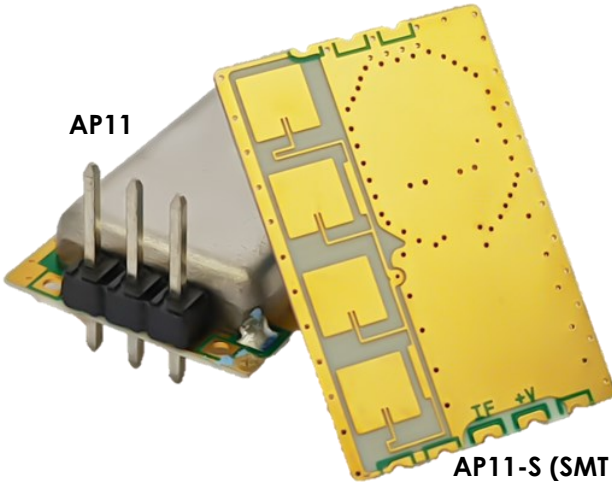

AP11-S (SMT version)

Features:

- Ultra small and flat profile
- Light weight
- CW and pulse mode operation
- Low current consumption

Applications:

- Motion detection
- Lighting control
- Security alarm
- Automatic door control

The AP11 K-band miniature sensor is an ultra small monostatic Doppler transceiver. It is suitable for applications in automatic access, security, lighting control and speed measurement.

The AP11's compact footprint, low profile and light weight enables OEMs to create products where tight spaces are a priority. Its integrated architecture minimizes component count for cost effectiveness. It is available in surface mount technology (SMT) and standard pin header versions for mounting flexibility.

Module Outline

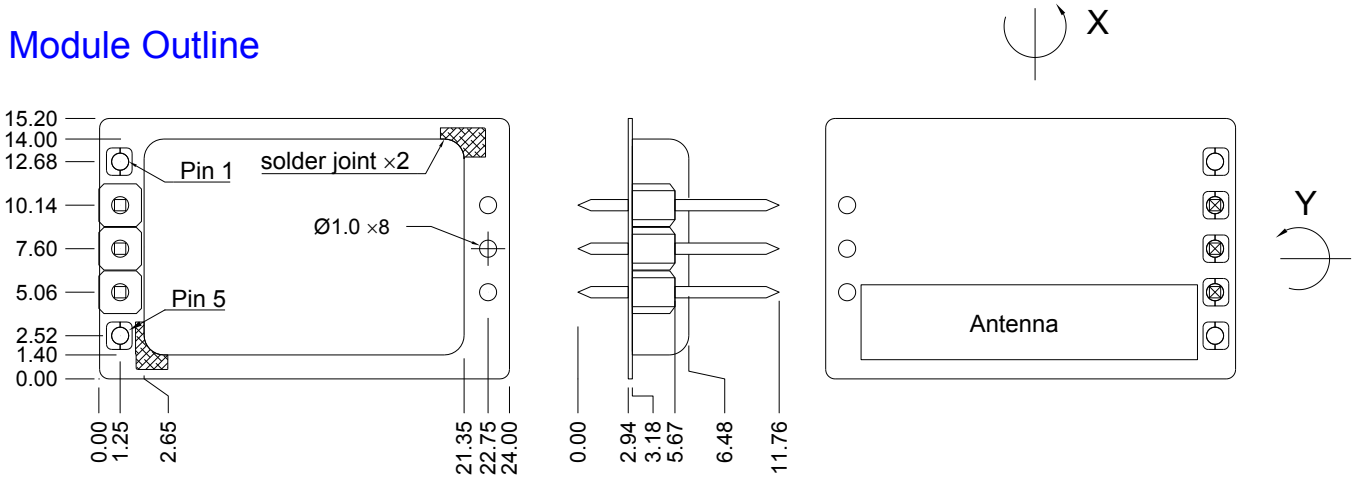

REAR VIEW SIDE VIEW FRONT VIEW - ANTENNA

All dimensions are in mm.

Pin	Name	Description
1	GND	Ground
2	+V	Supply voltage, V_{IN}
3	IF	IF_{out}
4	GND	Ground
5	GND	Ground

Note 1: Refer to application note for AP11-S' outline.

Note 2: AP11 complies with EN 300 440 and FCC Part 15.245.

Note 3: **CAUTION: ELECTROSTATIC SENSITIVE DEVICE.** Observe precautions for handling and storage.

Antenna Beam Pattern

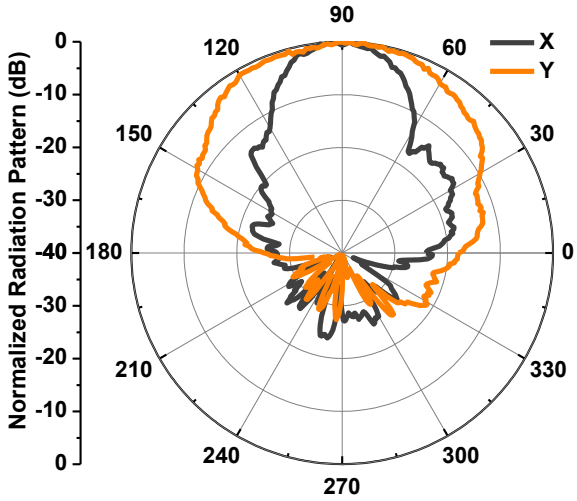

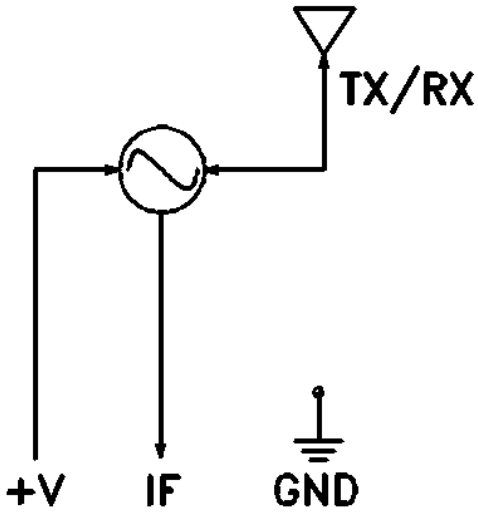

Technical Specifications

Unless noted otherwise, the specifications are measured in CW mode, $V_{IN} = 3\ V_{DC}$ and 12k ohm load at +25°C.

Parameter	Remarks	Min	Typical	Max	Units
Operating Conditions					
Supply voltage, V_{IN}	AP11, AP11-S	2.85	3	3.15	V_{DC}
Current consumption			30	40	mA
Operating temperature		-20		60	°C
Recommended Pulse Scheme					
Pulse frequency	Pulse mode		2		KHz
Duty cycle	Pulse mode		2		%
Transmitter					
Operating frequency		24.075	24.125	24.175	GHz
Radiated power (EIRP)			15		dBm
Spurious emission				-30	dBm
Frequency drift vs temperature			-1		MHz/°C
Antenna					
Antenna beam-width (3 dB) - X			32		°
Antenna beam-width (3 dB) - Y			80		°
Antenna sidelobe rejection			15		dB
Receiver					
Noise level	100 Hz—1 kHz		40		μV_{rms}
DC Offset			1.8		V
Physical Properties					
Dimensions	AP11		15.2 × 24.0 × 11.8		mm
	AP11-S		15.2 × 21.5 × 3.5		mm
Weight	AP11		1.4		g
	AP11-S		1.2		g

ST Electronics (Satcom & Sensor Systems) Pte Ltd
ST Engineering Hub, 1 Ang Mo Kio Electronics Park Road, #06-02, Singapore 567710
Tel: (65) 6521 7888 Fax: (65) 6521 7801
Website: www.agilsense.com *(Regn. No.: 199103901W)*

Federal Communication Commission Interference

This device complies with Part 15 of the FCC Rules. Operation is subject to the following two conditions: (1) This device may not cause harmful interference, and (2) this device must accept any interference received, including interference that may cause undesired operation.

This equipment has been tested and found to comply with the limits for a Class B digital device, pursuant to Part 15 of the FCC Rules. These limits are designed to provide reasonable protection against harmful interference in a residential installation. This equipment generates, uses and can radiate radio frequency energy and, if not installed and used in accordance with the instructions, may cause harmful interference to radio communications. However, there is no guarantee that interference will not occur in a particular installation. If this equipment does cause harmful interference to radio or television reception, which can be determined by turning the equipment off and on, the user is encouraged to try to correct the interference by one of the following measures:

- Reorient or relocate the receiving antenna.
- Increase the separation between the equipment and receiver.
- Connect the equipment into an outlet on a circuit different from that to which the receiver is connected.
- Consult the dealer or an experienced radio/TV technician for help.

FCC Caution: Any changes or modifications not expressly approved by the party responsible for compliance could void the user's authority to operate this equipment.

This transmitter must not be co-located or operating in conjunction with any other antenna or transmitter.

Radiation Exposure Statement:

This equipment complies with FCC radiation exposure limits set forth for an uncontrolled environment. This equipment should be installed and operated with minimum distance 20cm between the radiator & your body.

This device is intended only for OEM integrators under the following conditions:

The antenna must be installed such that 20 cm is maintained between the antenna and users, and

The transmitter module may not be co-located with any other transmitter or antenna.

As long as 2 conditions above are met, further transmitter test will not be required. However, the OEM integrator is still responsible for testing their end-product for any additional compliance requirements required with this module installed

IMPORTANT NOTE: In the event that these conditions can not be met (for example certain laptop configurations or co-location with another transmitter), then the FCC authorization is no longer considered valid and the FCC ID can not be used on the final product. In these circumstances, the OEM integrator will be responsible for re-evaluating the end product (including the transmitter) and obtaining a separate FCC authorization.

ST Electronics (Satcom & Sensor Systems) Pte Ltd
ST Engineering Hub, 1 Ang Mo Kio Electronics Park Road, #06-02, Singapore 567710
Tel: (65) 6521 7888 Fax: (65) 6521 7801
Website: www.agilsense.com *(Regn. No.: 199103901W)*

Federal Communication Commission Interference

End Product Labeling

This transmitter module is authorized only for use in device where the antenna may be installed such that 20 cm may be maintained between the antenna and users. The final end product must be labeled in a visible area with the following: “Contains FCC ID: VECAP11”. The grantee's FCC ID can be used only when all FCC compliance requirements are met.

Manual Information To the End User

The OEM integrator has to be aware not to provide information to the end user regarding how to install or remove this RF module in the user’s manual of the end product which integrates this module.

The end user manual shall include all required regulatory information/warning as show in this manual.

V1.00

5. User Interface

The AP11 and the AP11-S are designed to interface users' amplifier/signal conditioning circuits via a 3-way pin header or SMT interface, as presented in figures 3 and 4 respectively. Mounting guidelines for are presented in Figures 5 and 6.

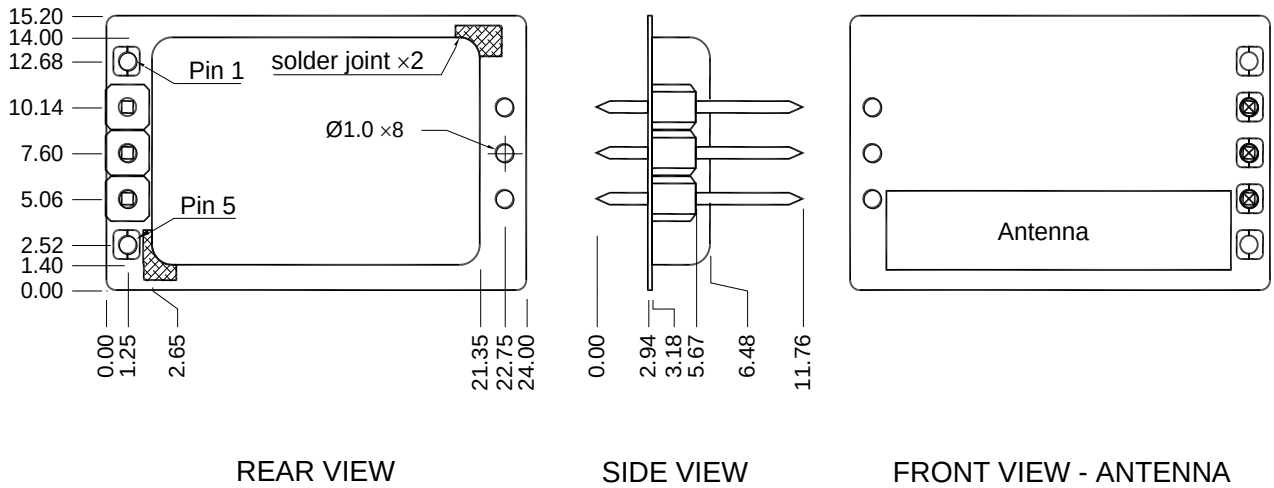

Figure 3. Interface and pinout of the AP11.

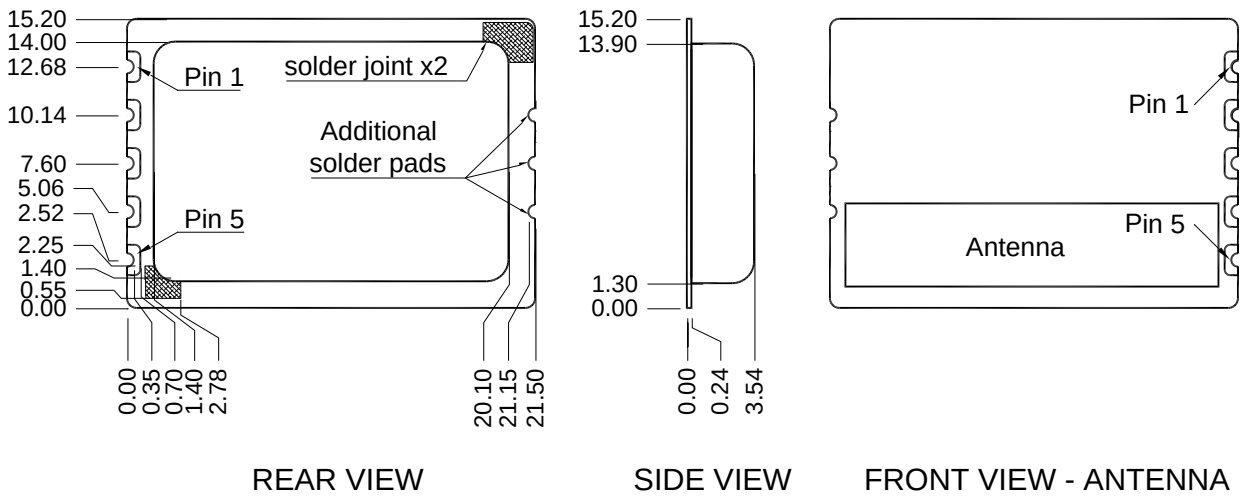

Pin	Name	Description
1	GND	Ground
2	+V	3 V Supply, V_{in}
3	IF	IF_{out}
4	GND	Ground
5	GND	Ground

Figure 4. Interface and pinout of the AP11-S.

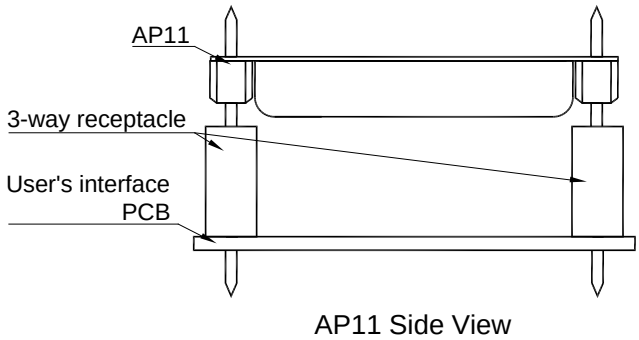

Figure 5. Recommended mounting for the AP11.

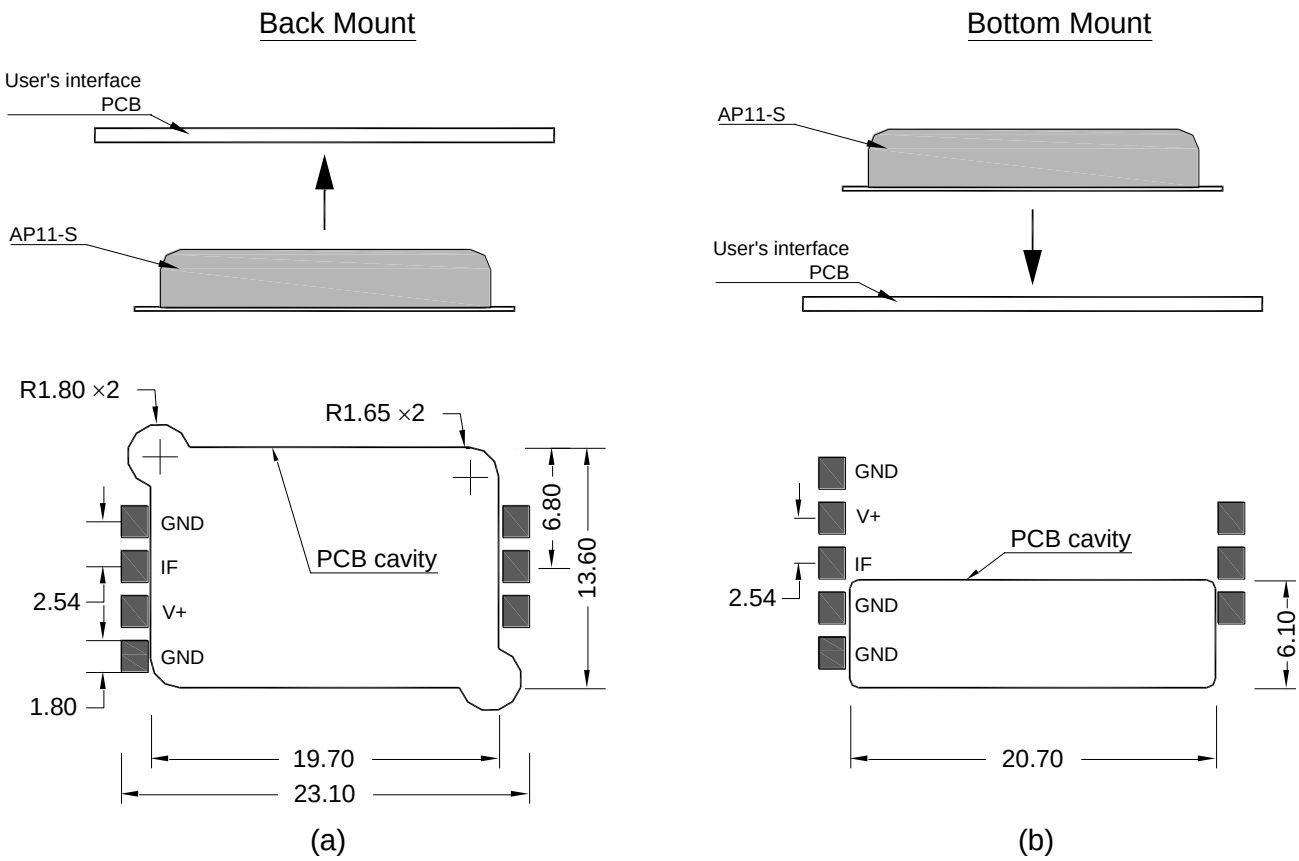

Figure 6. Mounting options and recommended PCB footprint for the AP11-S. (a) Back Mount (b) Bottom Mount.

To ensure functionality of the sensor module, users are advised to prevent any metallic parts from contacting +V and IF terminals, or mounted too close to the patch antenna array.

Any pressure or stress to the module should be avoided as it may result in performance variations.

⚠ CAUTION!

Plugging-in the module into an active power supply may not itself cause any damage, but any accidental short to ground during this process may cause component damage in the module.

It is therefore recommended that power supply to be SWITCHED OFF first before connecting the modules.

6. Pulsing the Voltage Supply

A constant DC power supply is typically supplied to the AP11 sensor module for continuous wave (CW) mode operation. However, lower current consumption is acheivable by pulsing the input voltage supply and a sample and hold circuit at the IF output. The AP11 sensor module can be powered by a $+V_{in}$ pulse train of 2 KHz pulse repetition frequency (PRF) with a pulse width as narrow as 10 µsec. Sensitivity of the module may be reduced when operating with narrow pulses.

The module start up time (settling time) is within 500 nsec, and the off time takes up to 600 nsec. During these periods, the module output could be noisy. Hence the detector should avoid analyzing signals close to these transition periods.

User should ensure that the PRF should be more than twice that of the signal frequency for proper re-construction of the Doppler signal.

7. Placing the module in enclosure

A suitable plastic material with both lower dielectric constant and lower loss tangent (i.e., ABS, Polycarbonate) is preferred. Microwaves penetrate through many plastics without significant loss as long as it does not have direct contact with the antenna patch surface. In comparison, metal and water results in significant reflection of microwaves. Therefore any metallic materials or metal plated plastics in front of the antenna will negatively affect the performance of the sensor.

Sensitivity of the sensor can be affected by the thickness of the plastic enclosure and the spacing between the antenna and the enclosure. Depending on the dielectric constant of the material and the operating frequency of the sensor, the required enclosure thickness and sensor-enclosure distance can vary. For typical ABS enclosures, we recommend a distance of 4-6 mm between the sensor and the enclosure. This distance can be fine-tuned for optimum performance. The enclosure thickness can be between 0.5 to 8 mm, depending on mechanical requirements. Details are presented in Figure 7.