Reverie®

Sleep well tonight. Live better tomorrow.™

ELATION™

SURROUND SOUND SPEAKERS

OWNER'S MANUAL - REVERIE® 4.1 BLUETOOTH® SPEAKER AM-BT-SO1

CONTENTS

4 Introduction

5 Safety

8 Parts List

9 Technical Specs

10 Setup

12 Troubleshooting

13 Warranty

INTRODUCTION

BEFORE YOU BEGIN:
Thank you for choosing Reverie® Elation surround sound bed speakers. Your speakers are designed to attach to your bed legs and push sound up and around the bed. Now you can better amplify the bedroom entertainment experience with high performing Bluetooth®-enabled surround sound speakers.

Benefits of your Elation speaker system:

- Specially-designed subwoofer for the bed that pushes sound up
- Freedom to move around the bedroom using a smart device
- Speakers easily clip on to bed foundation legs
- Eco Power feature automatically turns off when not in use / turns on with music trigger

Carefully unpack your speakers and save all of the packing materials, which provide the safest means for shipping or transporting.

If any part appears damaged, do not attempt to use it. Contact Reverie® directly at 1-800-973-8374.

WARNING: To avoid danger of suffocation, keep the plastic bags that wrap this speaker system out of the reach of children.

Please read this guide carefully before using this product. After you have finished reading, please keep for future reference.

CAUTION

RISK OF ELECTRICAL SHOCK
DO NOT OPEN

CAUTION: TO REDUCE THE RISK OF ELECTRICAL SHOCK,
DO NOT REMOVE COVER (OR BACK),
NO USER-SERVICABLE PARTS INSIDE,
REFER SERVICING TO QUALIFIED SERVICE PERSONNEL

The lightning flash with arrowhead symbol within an equilateral triangle alerts the user to the presence of uninsulated, dangerous voltage within the system enclosure that may be of sufficient magnitude to constitute a risk of electric shock.

The exclamation point within an equilateral triangle, as marked on the system, is intended to alert the user to the presence of important operating and maintenance instructions in this owner's guide.

WARNING: This product contains magnetic material. Please contact your physician if you have any questions on whether this might affect the operation of your implantable medical device.

CAUTION: Make no modifications to the system or accessories. Unauthorized alterations may compromise safety, regulatory compliance, and system performance.

WARNING: To reduce the risk of fire or electrical shock, do not expose this product to water.

SAFETY

WARNINGS:

- Do not operate the device outside of normal operating environment temperature of 32° to 113°F (0° to +45°C).
- Do not place any naked flame source on or near the device.
- Do not use any charger other than the one officially supplied by Reverie®.
- The short wave radio frequency signals of a Bluetooth® device may impair the operation of other electronic and medical devices.
- Keep this device at least 20 cm from pacemakers and other medical devices.
- Switch off the device where it is prohibited. Do not use the device in medical facilities, aircraft, refueling points, close to automatic doors, automatic fire alarms or other automatically controlled devices.
- Disconnect from the power source when the device is expected to unused for several days.

IMPORTANT SAFETY INSTRUCTIONS:

1) Read these instructions before using the device.
2) Keep these instructions for future reference.
3) Heed all warnings.
4) Follow all instructions while using the device.
5) Clean only with a soft, dry cloth.
6) Do not block any ventilation openings.
7) Do not install near any heat sources.
8) Unplug from the wall outlet during lightning storms or when unused for long periods of time.
9) Refer all servicing to qualified service personnel.
10) This product is not intended for use outdoors.

NOTICE:

This equipment has been tested and found to comply with the limits for a Class B digital device, pursuant to Part 15 of the FCC Rules. These limits are designed to provide reasonable protection against harmful interference in a residential installation. This equipment generates, uses, and can radiate radio frequency energy and, if not installed and used in accordance with the instructions, may cause harmful interference to radio communications. However, there is no guarantee that interference will not occur in a particular installation. If this equipment does cause harmful interference to

radio or television reception, which can be determined by turning the equipment off and on, the user is encouraged to try to correct the interference by one or more of the following measures:

- Reorient or relocate the receiving antenna.
- Increase the separation between the equipment and receiver.
- Connect the equipment into an outlet on a circuit different from that to which the receiver is connected.
- Consult the dealer or an experienced radio/TV technician for help.

CAUTION:
Any alterations or modifications not expressly approved by Reverie® may void the user's right to operate this equipment.

NOTE ON ELECTRICAL NOISE:
This device complies with FCC and Industry Canada RF radiation exposure limits set forth for the general population. It must not be co-located or operating in conjunction with any other antenna or transmitters.

FCC WARNING:
This device complies with Part 15 of FCC Rules. Operation is subject to the followingtwo conditions: (1) this device may not cause harmful interference, and (2) this device must accept any interference received, including interference that may cause undesired operation.

CANADA:
This Class B digital apparatus complies with Canadian ICES-003.
This device complies with Industry Canada licence-exempt RSS standard(s). Operation is subject to the following two conditions: (1) This device may not cause interference, and (2) this device must accept any interference, including interference that may cause undesired operation of the device.

CE Reverie hereby declares that this product is in compliance with the essential requirements and other relevant provisions of Directive 1999/5/EC and to all applicable EU directive requirements.

NOTE:
The model number and serial number of this equipment are on the rear or bottom. Please record these numbers on your enclosed warranty card and keep in a safe place for future reference.

PARTS LIST

1x Subwoofer
4x Speakers
4x Reverie Speaker Mounts
4x Universal Speaker Mounts
1x Aux Cable
1x Adapter with Cable
1x AC Cord
6x Velcro Cable Ties
4x Rubber Feet

REVERIE SPEAKER SPECIFICATIONS	
System Configuration	4.1 digital audio / stereo speaker
Dimensions	Satellite: 4.84(H) x 2.83(W) x 2.13(D) inch) (123.0(H) x 72.0(W) x 54.0(D) mm) Subwoofer: 8.03(H) x 10.6(W) x 9.33(D) inches (204.0(H) x 270.0(W) x 237.0(D) mm)
Weight	Satellite: 0.6 lbs / each (0.27 kg / each); Subwoofer: 8.1 lbs (3.7 kg)
Color	Black
Mountability	Yes
CONTROLS / CONNECTIVITY	
Bluetooth® Version	Bluetooth® **4.0** (CSR module) Compatible with **3.0** & **2.0**
HSP, HFP	-
A2DP, AVRCP	Yes
Transmitter range (visual range)	10m
Supported Code	SBC
Connector Type	Bluetooth® RCA (SAT to SUB) Aux-In
FEATURES	
Power Voltage	Input: 100-240V, 50-60Hz; Output: 16Vdc, 3.2A
Drivers	Audiophile Grade Drivers
SUPPORTED PLATFORMS FOR WIRELESS AUDIO (MINIMUM REQUIREMENTS)	
Mobile/Smart Devices	Mobile / Smart devices with A2DP - enabled Bluetooth® technology

SETUP

1) Place the 4 speakers next to each of the 4 bed legs.

- If you own a Reverie® bed foundation, place speaker clips next to each speaker.
- If you own a non-Reverie® foundation, place universal bands next to each speaker.
- Place the subwoofer in front of the bed.

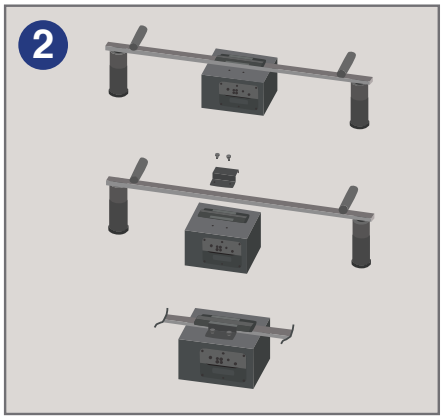

2) Subwoofer can be attached or standalone (keep plugins facing outward for easy access):

ATTACHED: Attach subwoofer to frame by sliding onto frame's underside/foot of bed (be sure to remove large screws prior placement).
Important: Once placed, be sure to replace large screws to ensure subwoofer stays secure when bed is in motion.

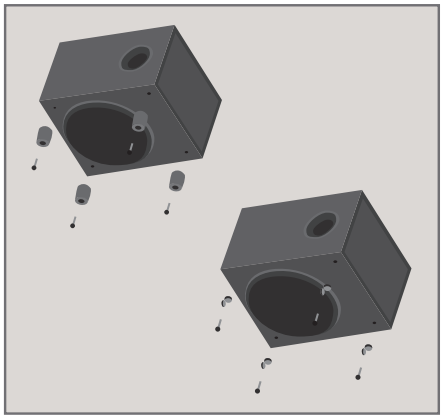

STANDALONE: Attach rubber feet to subwoofer and place under bedframe/foot of bed.
Note: Standalone is the only solution for the Reverie 3E.
Important: Do not place subwoofer directly on floor – always use rubber feet.

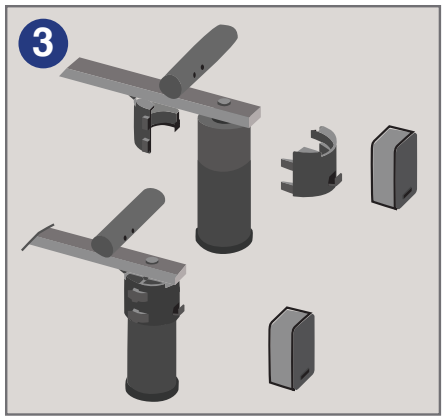

3) Speakers can be attached to bed legs as follows:

Attach speaker clips to Reverie® bed legs by placing each half around leg and interlocking/snapping both pieces together. Large hook should face outward – slide speaker onto hook. Note: If you need to release the clips, remove the speaker, press down on two side tabs and pull apart.

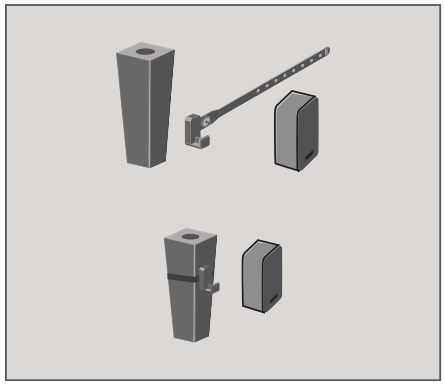

Or
Attach rubber universal bands to bed legs by wrapping band around legs with speaker hook facing outward. Pull tight and press notch through hole to secure. Attach speaker to clip.

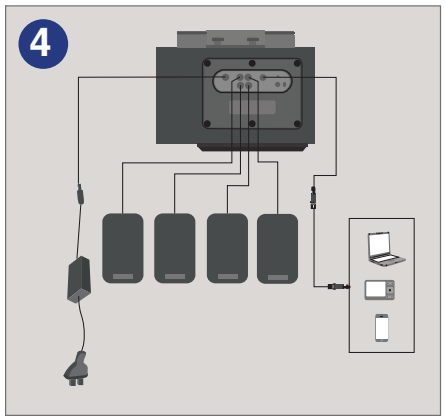

4) Attach each speaker to subwoofer as shown in diagram. Head speakers to head plugin foot speakers to foot plugin

- Subwoofer to 16V DC IN connector
- Devices can be attached through the AUX IN plugin
- Head speaker to head RCA jack
- Foot speaker to foot RCA jack

Note: Be sure that bed covers do not block speakers.

TROUBLESHOOTING

THE SPEAKERS WILL NOT TURN ON.

- Check your adapter and subwoofer to determine whether the light is on. it is, then the power is on. If not, ensure that you are connected to a working AC outlet.
- If the speakers still will not turn on, unplug the power cord and then plug in the power cord after 30 seconds.

THE BLUETOOTH® DEVICE WILL NOT PAIR WITH THE SPEAKERS.

- Check to make sure that your speakers can be discovered (the Bluetooth® status indicator will blink blue one time).
- Check to make sure Bluetooth® is enabled on your device.
- In the Bluetooth® device list on your device, make sure that you have selected "Reverie 4.1" and your device has confirmed the connection.
- Try moving your Bluetooth® device closer to the speakers. Note that the transmitter's range is 32.8 ft. (10 m).
- A nearby Bluetooth® device may be causing interference. Try turning them off or disabling their Bluetooth® functionality.
- Check to make sure that your device supports the A2DP (stereo Bluetooth®) profile.
- Try turning the speakers off and back on. Once the speakers are back on, pair your device again.

THE BLUETOOTH® DEVICE IS CONNECTED TO THE SPEAKERS, BUT THERE IS NO SOUND OR THE SOUND QUALITY IS POOR.

- Check to make sure that your Bluetooth® device is connected to the speakers and that audio is playing on the Bluetooth® device.
- Check to make sure that the speakers are not muted and the volume is turned up.
- Check to make sure that the speakers are properly connected to the subwoofer.
- Try moving your Bluetooth® device closer to the speakers. Note that the transmitter's range is 32.8 ft. (10 m). Any barriers between the Bluetooth® device and the speakers, such a wall or metal material, may cause a poor connection.
- Turn the speakers off and back on. Once on, connect your device again.
- Check whether an AUX-in cable is plugged in on the subwoofer. If it is, remove it.
- Nearby Bluetooth® devices may be causing interference. Try turning them off or disabling their Bluetooth® functionality.
- Try reducing the number of running applications on your device.
- Turning Wi-Fi off on your device may improve sound quality.

LIMITED WARRANTY

Ascion, LLC d/b/a Reverie (hereinafter referred to as “Reverie”) warrants to the end user (hereinafter referred to as the “Purchaser”) that the hardware product (hereinafter referred to as the “Product”) will be free from defects in workmanship and materials, under normal use and service, for a period of one (1) year from the date of purchase from Reverie or a Reverie Authorized Retailer.

During the one (1) year Term of this Limited Warranty, Reverie will, at its option and sole and absolute discretion, repair or replace the Purchaser’s Product if it is determined by Reverie, in its sole and absolute discretion that the Product is defective due to faulty workmanship or materials, subject to the limitations described in this Warranty.

This Warranty is valid only for the Original Purchaser of the Product. An Original Purchaser is one who purchases the Product directly from Reverie or a Reverie Authorized Retailer. If Purchaser is not the Original Purchaser of this Product, he/she takes it “as is” and “with all faults.” If the purchase of this Product was not directly from Reverie, proof of purchase will be required to demonstrate that Purchaser is the Original Purchaser and eligible to make a valid claim under this Warranty.

Products that Reverie deems to be abused, mishandled, or used in any way that contributed to the defect in question may be denied warranty coverage at Reverie’s sole and absolute discretion. All transportation costs associated with repairs or replacement of the Product are the Purchaser’s responsibility.

In no case shall Reverie be responsible for damage to any connected audio equipment, resulting from misuse, abuse, neglect, improper installation or testing, unspecified application, modification or alteration of or tampering with the Product.

This Warranty gives the Purchaser specific legal rights, and the Purchaser may also have other rights, which may vary from State to State.

FOR WARRANTY AND SERVICE:

Attn: Warranty and Service Department
Reverie
341 Central Ave.
Silver Creek, NY 14136

www.reverie.com
1.800.973.8374
warrantyservice@reverie.com

Reverie®

www.reverie.com

1.800.973.8374