# Microwave Oven

# INSTRUCTION MANUAL

## Model:EM159K9X

Read these instructions carefully before using your microwave oven, and keep it carefully.
If you follow the instructions, your oven will provide you with many years of good service.

SAVE THESE INSTRUCTIONS CAREFULLY

# PRECAUTIONS TO AVOID POSSIBLE EXPOSURE TO EXCESSIVE MICROWAVE ENERGY

(a) Do not attempt to operate this oven with the door open since open-door operation can result in harmful exposure to microwave energy.
It is important not to defeat or tamper with the safety interlocks.

(b) Do not place any object between the oven front face and the door or allows soil or cleaner residue to accumulate on sealing surfaces.

(c) Do not operate the oven if it is damaged. It is particularly important that the oven door close properly and that there is no damage to the:

(1) DOOR (bent)

(2) HINGES AND LATCHES (broken or loosened)

(3) DOOR SEALS AND SEALING SURFACES

(d) The oven should not be adjusted or repaired by anyone except properly qualified service personnel.

# Specifications

| | |
|---|---|
| Model: | EM159K9X |
| Rated Voltage: | 120V~60Hz |
| Rated Input Power(Microwave): | 1650W |
| Rated Output Power(Microwave): | 1100W |
| Oven Capacity: | 59L |
| Turntable Diameter: | ∅360mm |
| External Dimensions: | 759x409x446mm |
| Net Weight: | Approx. 28.2kg |

# IMPORTANT SAFETY INSTRUCTIONS

When using electrical appliances basic safety precautions should be followed, including the following:

**WARNING -** To reduce the risk of burns, electric shock, fire, injury to persons or exposure to excessive microwave energy:

1. Read all instructions before using the appliance.
2. Read and follow the specific: "PRECAUTIONS TO AVOID POSSIBLE EXPOSURE TO EXCESSIVE MICROWAVE ENERGY" found on page 2.
3. This appliance must be grounded. Connect only to properly grounded outlet. See "GROUNDING INSTRUCTIONS" found on page 5.
4. Install or locate this appliance only in accordance with the provided installation instructions.
5. Some products such as whole eggs and sealed containers - for example, closed glass jars - are able to explode and should not be heated in this oven.
6. Use this appliance only for its intended use as described in the manual. Do not use corrosive chemicals or vapors in this appliance. This type of oven is specifically designed to heat, cook or dry food. It is not designed for industrial or laboratory use.
7. As with any appliance, close supervision is necessary when used by children.
8. Do not operate this appliance if it has a damaged cord or plug, if it is not working properly, or if it has been damaged or dropped.
9. This appliance should be serviced only by qualified service personnel. Contact nearest authorized service facility for examination, repair, or adjustment.
10. Do not cover or block any openings on the appliance.
11. Do not store this appliance outdoors. Do not use this product near water - for example, near a kitchen sink, in a wet basement, near a swimming pool, or similar location.
12. Do not immerse cord or plug in water.
13. Keep cord away from heated surface.
14. Do not let cord hang over edge of table or counter.
15. When cleaning surfaces of door and oven that comes together on closing the door, use only mild, nonabrasive soaps, or detergent applied with a sponge or soft cloth.
16. To reduce the risk of fire in the oven cavity:
    1). Do not overcook food. Carefully attend appliance when paper, plastic, or other combustible materials are placed inside the oven to facilitate cooking.
    2). Remove wire twist-ties from paper or plastic bag before placing bag in oven.
    3). If material inside of the oven ignite, keep oven door closed, turn oven off, and disconnect the power cord, or shut off power at the fuse or circuit breaker panel.
    4). Do not use the cavity for storage purposes. Do not leave paper products, cooking utensils, or food in the cavity when not in use.
17. Liquids, such as water, coffee, or tea are able to be overheated beyond the boiling point without appearing to be boiling. Visible bubbling or boiling when the container is removed from the microwave oven is not always present.

THIS COULD RESULT IN VERY HOT LIQUID SUDDENLY BOILING OVER WHEN THE CONTAINER IS DISTURBED OR A UTENSIL IS INSERTED INTO THE LIQUID.

To reduce the risk of injury to persons:

1) Do not overheat the liquid.
2) Stir the liquid both before and halfway through heating it.
3) Do not use straight-sided containers with narrow necks.
4) After heating, allow the container to stand in the microwave oven for a short time before removing the container.
5) Use extreme care when inserting a spoon or other utensil into the container.

18. As with any appliance, close supervision is necessary when the microwave oven is used by children.
19. If material inside of the oven should ignite, the oven door should be kept closed, the appliance turned off, the power cord disconnected, or the power shut off at the fuse or circuit breaker panel.

# SAVE THESE INSTRUCTIONS

# GROUNDING INSTRUCTIONS

This appliance must be grounded. In the event of an electrical short circuit, grounding reduces the risk of electric shock by providing an escape wire for the electric current. This appliance is equipped with a cord having a grounding wire with a grounding plug. The plug must be plugged into an outlet that is properly installed and grounded.

**WARNING -** Improper use of the grounding can result in a risk of electric shock.

Consult a qualified electrician or serviceman if the grounding instructions are not completely understood, or if doubt exists as to whether the appliance is properly grounded. If it is necessary to use an extension cord, use only a 3-wire extension cord that has a 3-blade grounded plug, and 3-slot receptacle that will accept the plug on the appliance. The marked rating of the extension cord shall be equal to or greater than the electrical rating of the appliance.

**DANGER -** Electric Shock Hazard
Touching some of the internal components can cause serious personal injury or death. Do not disassemble this appliance.

**WARNING -** Electric Shock Hazard
Improper use of the grounding can result in electric shock. Do not plug into an outlet until appliance is properly installed and grounded.

1. A short power-supply cord is provided to reduce the risks resulting from becoming entangled in or tripping over a longer cord.
2. Longer cord sets or extension cords are available and may be used if care is exercised in their use.

3. If a long cord or extension cord is used:
   1) The marked electrical rating of the cord set or extension cord should be at least as great as the electrical rating of the appliance.
   2) The extension cord must be a grounding-type 3-wire cord.
   3) The longer cord should be arranged so that it will not drape over the counter top or tabletop where it can be pulled on by children or tripped over unintentionally.

# RADIO INTERFERENCE

1. Operation of the microwave oven may cause interference to your radio, TV or similar equipment.
2. When there is interference, it may be reduced or eliminated by taking the following measures:
   1) Clean door and sealing surface of the oven
   2) Reorient the receiving antenna of radio or television.
   3) Relocate the microwave oven with respect to the receiver.
   4) Move the microwave oven away from the receiver.
   5) Plug the microwave oven into a different outlet so that microwave oven and receiver are on different branch circuits.

# SAFETY

1. The oven must be on a leveled surface.
2. The turntable and turntable roller rest must be in the oven during cooking. Place the cookware gently on the turntable and handle it carefully to avoid possible breakage.
3. Incorrect use of browning dish may cause the turntable to break.
4. Use only the specified bag size when using Direct Access Popcorn.
5. The oven has several built-in safety switches to ensure that the power remains off when the door is open. Do not tamper with these switches.
6. Do not operate the microwave oven empty. Operating the oven with no food or food that is extremely low in moisture can cause fire, charring or sparking.
7. Do not cook bacon directly on the turntable. Excessive local heating of the turntable may cause the turntable to break.
8. Do not heat baby bottles or baby food in the microwave oven. Uneven heating may occur and could cause physical injury.

9. Do not heat narrow-necked containers, such as syrup bottles.
10. Do not attempt to deep-fry in your microwave oven.
11. Do not attempt home canning in this microwave oven, as it is impossible to be sure all contents of the jar have reached boiling temperature.
12. Do not use this microwave oven for commercial purpose. This microwave oven is made for household use only.
13. To prevent delayed eruptive boiling of hot liquids and beverages or scalding yourself, stir liquid before placing the container in the oven and again halfway through cooking time. Let stand in the oven for a short time and stir again before removing the container.
14. Use carefully when cooking food in the microwave oven to avoid burning due to excessive cooking.
15. When the appliance is operated in the combination mode, children should only use the oven under adult supervision due to the temperatures generated.
16. Failure to maintain the oven in a clean condition could lead to deterioration that could adversely affect the life of the appliance and possibly result in a hazardous situation.

# UTENSILS

**CAUTION -** Personal Injury Hazard
Tightly-closed utensils could explode. Closed containers should be opened and plastic pouches should be pierced before cooking.

See the instructions on "Materials you can use in microwave oven or to be avoided in microwave oven."
There may be certain non-metallic utensils that are not safe to use for microwaving. If in doubt, you can test the utensil in question following the procedure below.

Utensil Test:

1. Fill a microwave-safe container with 1 cup of cold water (250ml) along with the utensil in question.
2. Cook on maximum power for 1 minute.
3. Carefully feel the utensil. If the empty utensil is warm, do not use it for microwave cooking.
4. Do not exceed 1 minute cooking time.

## Materials you can use in microwave oven

| Utensils | Remarks |
|---|---|
| Aluminum foil | Shielding only. Small smooth pieces can be used to cover thin parts of meat or poultry to prevent overcooking. Arcing can occur if foil is too close to oven walls. The foil should be at least 1 inch (2.5cm) away from oven walls. |
| Browning dish | Follow manufacturer* instructions. The bottom of browning dish must be at least 3/16 inch (5mm) above the turntable. Incorrect usage may cause the turntable to break. |
| Dinnerware | Microwave-safe only. Follow manufacturer's instructions. Do not use cracked or chipped dishes. |
| Glass jars | Always remove lid. Use only to heat food until just warm. Most glass jars are not heat resistant and may break. |
| Glassware | Heat-resistant oven glassware only. Make sure there is no metallic trim. Do not use cracked or chipped dishes. |
| Oven cooking bags | Follow manufacturer* instructions. Do not close with metal tie. Make slits to allow steam to escape. |
| Paper plates and cups | Use for short*erm cooking/warming only. Do not leave oven unattended while cooking. |
| Paper towels | Use to cover food for reheating and absorbing fat. Use with supervision for a short-term cooking only. |
| Parchment paper | Use as a cover to prevent splattering or a wrap for steaming. |
| Plastic | Microwave-safe only. Follow the manufacturer* instructions. Should be labeled "Microwave Safe". Some plastic containers soften, as the food inside gets hot. "Boiling bags" and tightly closed plastic bags should be slit, pierced or vented as directed by package. |
| Plastic wrap | Microwave-safe only. Use to cover food during cooking to retain moisture. Do not allow plastic wrap to touch food. |
| Thermometers | Microwave-safe only (meat and candy thermometers). |
| Wax paper | Use as a cover to prevent splattering and retain moisture. |

## Materials to be avoided in microwave oven

| Utensils | Remarks |
|---|---|
| Aluminum tray | May cause arcing. Transfer food into microwave-safe dish. |
| Food carton with metal handle | May cause arcing. Transfer food into microwave-safe dish. |
| Metal or metal-trimmed utensils | Metal shields the food from microwave energy. Metal trim may cause arcing. |
| Metal twist ties | May cause arcing and could cause a fire in the oven. |
| Paper bags | May cause a fire in the oven. |
| Plastic foam | Plastic foam may melt or contaminate the liquid inside when exposed to high temperature. |
| Wood | Wood will dry out when used in the microwave oven and may split or crack. |

# PART NAMES

**Front view**

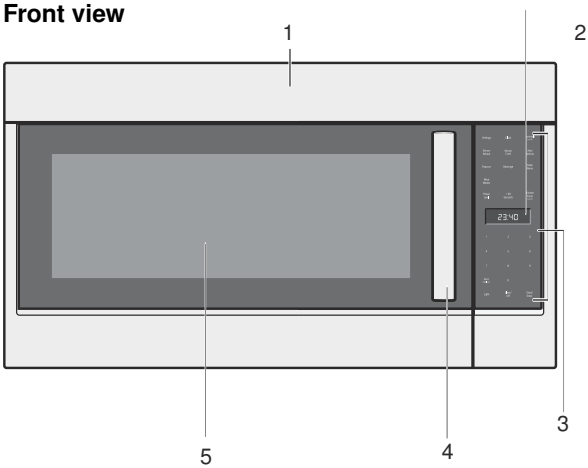


| | |
|---|---|
| **1** | Top vent grill |
| **2** | Display |
| **3** | Control panel |
| **4** | Door handle |
| **5** | Window |
| **6** | Surface lights |
| **7** | Ventilation filters |

**Bottom view**

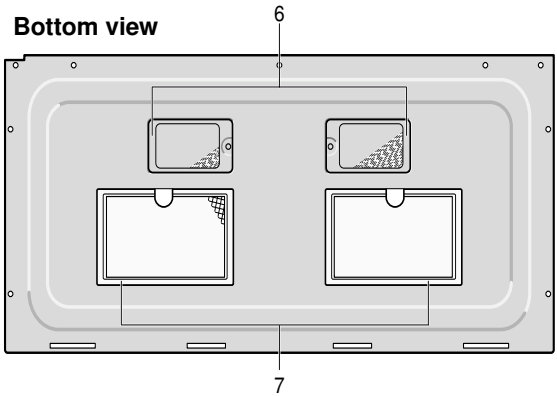


## Convection Fan

The convection fan operates during all convection modes. When the oven is operating in a convection mode, the fan turns off automatically when the door is opened.

## Cooling Fan

The cooling fan runs during all cooking modes. The fan can be heard when it is running, and warm air may be felt as it is released from the oven vent. The fan may also run after the oven is off.

## Oven Vent

The oven vent is located at the top of the unit. Warm air may be released from the vent before, during and after cooking. It is normal to see steam escaping from the vent, and condensation may collect in this area. This area may be warm when the oven is in use. Do not block the vent, since it is important for air circulation.

# Control panel

| Press button | Function |
|---|---|
| **Settings** | Change basic settings |
| **Clock** | Set time of day |
| **Turntable (on/off)** | Switches turntable on or off |
| **Sensor Reheat** | Reheat food with automatic settings |
| **Sensor Cook** | Cook food with automatic settings |
| **Auto Defrost** | Defrost food with automatic settings |
| **Popcorn** | Select popcorn bag size |
| **Beverage** | Heat beverages, select beverage size |
| **Keep Warm** | Set Keep Warm feature |
| **More Modes** | Enter more modes for convenience cooking |
| **Power Level** | Set power level for microwave operation |
| **+30 Seconds** | Add 30 seconds to microwave timer |

| Press button | Function |
|---|---|
| **Kitchen Timer** | Set kitchen timer |
| **0 - 9** | Use the number keys to enter cus-tomized values |
| **Vent (high/low)** | Turn kitchen ventilation feature on/off |
| **Light** | Turn surface light on/off |
| **Clear/Off** | Clear entered value/turn appliance off |
| **Start/Enter** | Confirm input, start operation |

# Operation

## 1 . Power Level

10 power levels are available.

| Level | 10 | 9 | 8 | 7 | 6 | 5 | 4 | 3 | 2 | 1 |
|---|---|---|---|---|---|---|---|---|---|---|
| Power | 100% | 90% | 80% | 70% | 60% | 50% | 40% | 30% | 20% | 10% |
| Display | PL10 | PL9 | PL8 | PL7 | PL6 | PL5 | PL4 | PL3 | PL2 | PL1 |

## 2 . Clock

The clock can be set in 12-hour mode.

1) In waiting state, press " **Clock** " once. "00:00" will blink in the display to remind you to input the time.
2) Press the number keys and enter the correct time. For example, time is 10:12 now, please press **"**1,0,1,2**"** in turn.
3) Press " **Start/Enter** " or **" Clock** " button to cnfirm the clock.

## 3 . Kitchen Timer

1) Press " **Kitchen Timer**" once, "00:00" will blink in the display.
2) Press the number keys and enter the timer time.(The maximum cooking time is 99 minutes and 99 seconds)
3) Press " **Start/Enter** " or " **Kitchen Timer** " to confirm setting. The kitchen time will start counting down.

## 4 . Time Cook

1) In waiting state, press the number keys to set the cooking time.(The maximum cooking time is 99 minutes and 99 seconds)
2) Press " **Power Level** " repeatedly to adjust the power level. The default power is PL10.
3) Press " **Start/Enter** " to start microwave cooking.

## 5 . Add Cooking Time (+30 Seconds)

1) In waiting state, press "**+30 Seconds**" button to cook with 100% power level for 30 seconds. Each press on the same button can increase 30 seconds. The maximum cooking time is 99 minutes and 59 seconds.
2) During cooking process(except defrost or keep warm), press " **+30 Seconds** "to increase the cooking time. Each press on the same button can increase 30 seconds. The maximum cooking time is 99 minutes and 59 seconds.

# 6. Auto Defrost

1) Press " **Auto Defrost** " once, "dEF1" will blink in the display.

2) Press " **Auto Defrost** " repeatedly to choose the desired function. And "dEF1", "dEF2" "dEF3" will display in turn.

3) Press " **Start/Enter** " to confirm the function. The screen will display "0.0 lb".

4) Press the number keys to set the weight of the food.

5) Press " **Start/Enter** " to start defrosting.

Note: Defrosting consists of 3 stages. When the first one and last one stage is finished, 5 beeps will sound.

**Auto Defrost programs**

| Program | Food | Weight range |
|---|---|---|
| **dEF1** | Ground meat | 0.5 - 3 lbs |
| **dEF2** | Meat pieces (steaks, chops) | 0.5 - 3 lbs |
| **dEF3** | Poultry pieces | 0.5 - 3 lbs |

# 7. Keep Warm

1) Press " **Keep Warm** ", "00:00" will blink in the display.

2) Press the number keys to set the time of keeping warm.(The maximum time is 60 minutes).

3) Press " **Start/Enter** " to confirm setting. The oven will start keeping warm.

# 8. Popcorn

1) Press " **Popcorn** " repeatedly until the number you wish appears in the display.

"1"SET: approximate 1.2 ounces

2"SET: approximate 2.5 ounces

3"SET: approximate 3.5 ounces

For example, press " **Popcorn** " once , "1.2" appears in the LED.

2) Press" **Start/Enter** " to cook.

## 9. Beverage

1) Press " **Beverage** " repeatedly until the number you wish appears in the display.

"1"SET: approximate 0.5 cup (about 8 ounces)

"2"SET: approximate 1.0 cup (aboutn 16 ounces)

"3"SET: approximate 1.5 cups (about 24 ounces)

"4"SET: approximate 2.0 cups (about 32 ounces)

For example, press " **Beverage** " once , "0.5" appears in the display.

2) Press " **Start/Enter** " to cook.

## 10. Sensor Reheat

1) Press " **Sensor Reheat** ", "Sr-1" is blinking in the screen.

2) Press " **Sensor Reheat** " repeatedly until the menu you wish appears in the display. And "Sr-1", "Sr-2" will display in turn.

3) Press " **Start/Enter** " to start sensor reheat mode. The appliance starts sensing. The microwave is operating during sensing. When sensing is complete, two short beeps will sound and the calculated cook time will start to count down.

Note: Do not open the door during the sensing process, or the program will be cancelled.

**Sensor Reheat programs**

| Program no. | Food | Quantity |
|---|---|---|
| **Sr-1** | Dinner plate | 8 to 16 Oz |
| **Sr-2** | Casserole, pasta | 2 to 4 cups |

## 11. Sensor Cook

1) Press " **Sensor Cook** " , "Sc-1" is blinking in the screen.

2) Press " **Sensor Cook** " repeatedly until the menu you wish appears in the display. And "Sc-1", "Sc-2", "Sc-3"..."Sc-9" will display in turn.

3) Press " **Start/Enter** " to start sensor cook mode. The appliance starts sensing. The microwave is operating during sensing. When sensing is complete, two short beeps will sound and the calculated cook time will start to count down.

Note: Do not open the door during the sensing process, or the program will be cancelled.

**Sensor Cook programs**

| Display | Food | Quantity |
|---|---|---|
| **Sc-1** | Baked Potato | 1 - 4 potatoes |
| **Sc-2** | Sweet Potato | 1 - 4 potatoes |
| **Sc-3** | Fresh Vegetable | 8 - 24 oz |
| **Sc-4** | Frozen Vegetable | 8 - 24 oz |
| **Sc-5** | Ground Meat | 8 - 24 oz |
| **Sc-6** | Fish/Seafood | 8 - 20 oz |
| **Sc-7** | Brown Rice | 1 - 2 cups |
| **Sc-8** | White Rice | 1 - 2 cups |
| **Sc-9** | Frozen Entrees | 8 - 24 oz |

## 12. More Modes

1) Press " **More Modes** ", " 1-5 " is blinking in the screen.

2) Press " **More Modes** " repeatedly until the menu you wish appears in the display. And " 1", " 2" ..."5" will display in turn.

3) Press " **Start/Enter** " .

For modes 1 to 4: press number keys to enter the desired weight category; For modes 5(time defrost): "00:00" is blinking , then press number keys to enter the desired defrost time.

4)Press " **Start/Enter** " to start operation .

Note: Time Defrost consists of 2 stages. When one stage is finished, 5 beeps will sound.

**Available modes**

| Mode no. | Name | Input |
|---|---|---|
| **1** | Melt butter | 1 = 2 tablespoons<br>2 = ¼ cup<br>3 = ½ cup |
| **2** | Melt chocolate | 1 = 1 cup<br>2 = 2 cups |
| **3** | Soften ice cream | 1 = 4 oz.<br>2 = 8 oz.<br>3 = 16 oz.<br>4 = 32oz.<br>5 = 48 oz. |
| **4** | Soften cream cheese | 1 = 3 oz.<br>2 = 6 oz.<br>3 = 8 oz. |
| **5** | Time defrost | Enter defrost time |

## 13 .Operating the Ventilation Fan

The Vent feature moves steam and other cooking vapors from the cooking surface of the range below the microwave oven.

You can set four different vent speeds.

Set the vent feature by pressing" **Vent (high/low)** " repeatedly. The ventilation symbol ⊡ will light up on the display.

| Display | Vent level |
|---|---|
| **4 HI** | 4 (high) |
| **3** | 3 |
| **2** | 2 |
| **1 LO** | 1 (low) |
| **OFF** | OFF |

## 14 .Turning the Surface Light on/off

The appliance is equipped with a cooking surface light, to light the surface underneath the appliance. With the" **Light** " button you can set two brightness levels.

| Display | Brightness |
|---|---|
| **HI** | High |
| **LO** | Low |
| **OFF** | Off |

## 15 .Turning the turntable on / off

For best cooking results, leave the turntable on. It can be turned off for large dishes. To turn the turntable off, press" **Turntable (on/off)** " once. The symbol and"OFF" lights up briefly. Press the button again to turn the turntable on. The symbol and"ON"lights up briefly.

## 16 .Panel Lock

**To activate the panel lock:**

Press and hold" **Clear/Off** " for more than 3 seconds. The symbol lights up in the display, a double beep sounds.

**To deactivate the panel lock:**

Press and hold "**Clear/Off** " for more than 3 seconds. The symbol disappears from the display. The panel is unlocked.

## 17 .Settings

**Example:** Turn clock display on/off.

1) Press" **Settings** " twice. **Clo** and **OFF** or **On** alternate in the display.
2) Press the number button **1** to turn the clock display on, press **2** to turn the clock display off.
3) Press " **Start/Enter** ".

**Note:** You can only change one setting at a time. To change another setting, you have to exit the settings menu first and begin from step 1.

| Press Settings button | Display | Function |
|---|---|---|
| once | **Snd** | Button sounds on/off<br>1 - on<br>2 - off |
| twice | **Clo** | Clock display in stand-by mode on/off<br>1 - on<br>2 - off |

# MAINTENANCE

## Troubleshooting

Check your problem by using the chart below and try the solutions for each problem. If the microwave oven still does not work properly, contact the nearest authorized service center.

| TROUBLE | POSSIBLE CAUSE | POSSIBLE REMEDY |
|---|---|---|
| Oven will not start | a. Electrical cord for oven is not plugged in.<br>b. Door is open.<br>c. Wrong operation is set. | a. Plug into the outlet.<br>b. Close the door and try again.<br>c. Check instructions. |
| Arcing or sparking | a. Materials to be avoided in microwave oven were used.<br>b. The oven is operated when empty.<br>c. Spilled food remains in the cavity. | a. Use microwave-safe cookware only.<br>b. Do not operate with oven empty.<br>c. Clean cavity with wet towel. |
| Unevenly cooked foods | a. Materials to be avoided in microwave oven were used.<br>b. Food is not defrosted completely.<br>c. Cooking time, power level is not suitble.<br>d. Food is not turned or stirred. | a. Use microwave-safe cookware only.<br>b. Completely defrost food.<br>c. Use correct cooking time, power level.<br>d. Turn or stir food. |
| Overcooked foods | Cooking time, power level is not suitable. | Use correct cooking time, power level. |
| Undercooked foods | a. Materials to be avoided in microwave oven were used.<br>b. Food is not defrosted completely.<br>c. Oven ventilation ports are restricted.<br>d. Cooking time, power level is not suitable. | a. Use microwave-safe cookware only.<br>b. Completely defrost food.<br>c. Check to see that oven ventilation ports are not restricted.<br>d. Use correct cooking time, power level. |
| Improper defrosting | a. Materials to be avoided in microwave oven were used.<br>b. Cooking time, power level is not suitable.<br>c. Food is not turned or stirred. | a. Use microwave-safe cookware only.<br>b. Use correct cooking time, power level.<br>c. Turn or stir food. |