Microwave Oven

INSTRUCTION MANUAL

Model:EM923MXX-P0R

Read these instructions carefully before using your microwave oven , and keep it carefully.

If you follow the instructions, your oven will provide you with many years of good service.

PRECAUTIONS TO AVOID POSSIBLE EXPOSURE TO EXCESSIVE MICROWAVE ENERGY

(a) Do not attempt to operate this oven with the door open since this can result in harmful exposure to microwave energy. It is important not to defeat or tamper with the safety interlocks.

(b) Do not place any object between the oven front face and the door or allow soil or cleaner residue to accumulate on sealing surfaces.

(c) Do not operate the oven if it is damaged. It is particularly important that the oven door closes properly and that there is no damage to the:

(1) DOOR (bent)

(2) HINGES AND LATCHES (broken or loosened)

(3) DOOR SEALS AND SEALING SURFACE

(d) The oven should not be adjusted or repaired by anyone except properly qualified service personnel.

Specifications

Model:	EM923MXX-P0R
Rated Voltage:	120V~ 60Hz
Rated Input Power(Microwave):	1350W
Rated Output Power(Microwave):	900W
Oven Capacity:	1.0 Cu.ft.
Turntable Diameter:	∅10.6 inch(270 mm)
External Dimensions:	XX1 inch (mmXmmXmm)
Net Weight:	Approx. Lbs(kg)

IMPORTANT SAFETY INSTRUCTIONS

When using electrical appliances basic safety precautions should be followed, including the following:

WARNING - To reduce the risk of burns, electric shock, fire, injury to persons or exposure to excessive microwave energy:

1. Read all instructions before using the appliance.
2. Read and follow the specific: "PRECAUTIONS TO AVOID POSSIBLE EXPOSURE TO EXCESSIVE MICROWAVE ENERGY" found on page 2.
3. This appliance must be grounded. Connect only to properly grounded outlet. See "GROUNDING INSTRUCTIONS" found on page 5.
4. Install or locate this appliance only in accordance with the provided installation instructions.
5. Some products such as whole eggs and sealed containers - for example, closed glass jars - are able to explode and should not be heated in this oven.
6. Use this appliance only for its intended use as described in the manual. Do not use corrosive chemicals or vapors in this appliance. This type of oven is specifically designed to heat, cook or dry food. It is not designed for industrial or laboratory use.
7. As with any appliance, close supervision is necessary when used by children.
8. Do not operate this appliance if it has a damaged cord or plug, if it is not working properly, or if it has been damaged or dropped.
9. This appliance should be serviced only by qualified service personnel. Contact nearest authorized service facility for examination, repair, or adjustment.
10. Do not cover or block any openings on the appliance.
11. Do not store this appliance outdoors. Do not use this product near water - for example, near a kitchen sink, in a wet basement, near a swimming pool, or similar location.
12. Do not immerse cord or plug in water.
13. Keep cord away from heated surface.
14. Do not let cord hang over edge of table or counter.
15. When cleaning surfaces of door and oven that comes together on closing the door, use only mild, nonabrasive soaps, or detergent applied with a sponge or soft cloth.
16. To reduce the risk of fire in the oven cavity:
    1). Do not overcook food. Carefully attend appliance when paper, plastic, or other combustible materials are placed inside the oven to facilitate cooking.
    2). Remove wire twist-ties from paper or plastic bag before placing bag in oven.
    3). If material inside of the oven ignite, keep oven door closed, turn oven off, and disconnect the power cord, or shut off power at the fuse or circuit breaker panel.
    4). Do not use the cavity for storage purposes. Do not leave paper products, cooking utensils, or food in the cavity when not in use.
17. Liquids, such as water, coffee, or tea are able to be overheated beyond the boiling point without appearing to be boiling. Visible bubbling or boiling when the container is removed from the microwave oven is not always present.

THIS COULD RESULT IN VERY HOT LIQUID SUDDENLY BOILING OVER WHEN THE CONTAINER IS DISTURBED OR A UTENSIL IS INSERTED INTO THE LIQUID.

To reduce the risk of injury to persons:

1) Do not overheat the liquid.
2) Stir the liquid both before and halfway through heating it.
3) Do not use straight-sided containers with narrow necks.
4) After heating, allow the container to stand in the microwave oven for a short time before removing the container.
5) Use extreme care when inserting a spoon or other utensil into the container.

SAVE THESE INSTRUCTIONS

GROUNDING INSTRUCTIONS

This appliance must be grounded. In the event of an electrical short circuit, grounding reduces the risk of electric shock by providing an escape wire for the electric current. This appliance is equipped with a cord having a grounding wire with a grounding plug. The plug must be plugged into an outlet that is properly installed and grounded.

WARNING - Improper use of the grounding can result in a risk of electric shock.

Consult a qualified electrician or serviceman if the grounding instructions are not completely understood, or if doubt exists as to whether the appliance is properly grounded. If it is necessary to use an extension cord, use only a 3-wire extension cord that has a 3-blade grounded plug, and 3-slot receptacle that will accept the plug on the appliance. The marked rating of the extension cord shall be equal to or greater than the electrical rating of the appliance.

DANGER - Electric Shock Hazard
Touching some of the internal components can cause serious personal injury or death. Do not disassemble this appliance.

WARNING - Electric Shock Hazard
Improper use of the grounding can result in electric shock. Do not plug into an outlet until appliance is properly installed and grounded.

1. A short power-supply cord is provided to reduce the risks resulting from becoming entangled in or tripping over a longer cord.
2. Longer cord sets or extension cords are available and may be used if care is exercised in their use.
3. If a long cord or extension cord is used:
   1) The marked electrical rating of the cord set or extension cord should be at least as great as the electrical rating of the appliance.
   2) The extension cord must be a grounding-type 3-wire cord.
   3) The longer cord should be arranged so that it will not drape over the counter top or tabletop where it can be pulled on by children or tripped over unintentionally.

RADIO INTERFERENCE

1. Operation of the microwave oven may cause interference to your radio, TV or similar equipment.
2. When there is interference, it may be reduced or eliminated by taking the following measures:
   1) Clean door and sealing surface of the oven
   2) Reorient the receiving antenna of radio or television.
   3) Relocate the microwave oven with respect to the receiver.
   4) Move the microwave oven away from the receiver.
   5) Plug the microwave oven into a different outlet so that microwave oven and receiver are on different branch circuits.

SAFETY

1. The oven must be on a leveled surface.
2. The turntable and turntable roller rest must be in the oven during cooking. Place the cookware gently on the turntable and handle it carefully to avoid possible breakage.
3. Incorrect use of browning dish may cause the turntable to break.
4. Use only the specified bag size when using Direct Access Popcorn.
5. The oven has several built-in safety switches to ensure that the power remains off when the door is open. Do not tamper with these switches.
6. Do not operate the microwave oven empty. Operating the oven with no food or food that is extremely low in moisture can cause fire, charring or sparking.
7. Do not cook bacon directly on the turntable. Excessive local heating of the turntable may cause the turntable to break.
8. Do not heat baby bottles or baby food in the microwave oven. Uneven heating may occur and could cause physical injury.
9. Do not heat narrow-necked containers, such as syrup bottles.
10. Do not attempt to deep-fry in your microwave oven.
11. Do not attempt home canning in this microwave oven, as it is impossible to be sure all contents of the jar have reached boiling temperature.

12. Do not use this microwave oven for commercial purpose. This microwave oven is made for household use only.
13. To prevent delayed eruptive boiling of hot liquids and beverages or scalding yourself, stir liquid before placing the container in the oven and again halfway through cooking time. Let stand in the oven for a short time and stir again before removing the container.
14. Use carefully when cooking food in the microwave oven to avoid burning due to excessive cooking.
15. When the appliance is operated in the combination mode, children should only use the oven under adult supervision due to the temperatures generated.
16. Failure to maintain the oven in a clean condition could lead to deterioration that could adversely affect the life of the appliance and possibly result in a hazardous situation.

UTENSILS

CAUTION - Personal Injury Hazard
Tightly-closed utensils could explode. Closed containers should be opened and plastic pouches should be pierced before cooking.

See the instructions on "Materials you can use in microwave oven or to be avoided in microwave oven."
There may be certain non-metallic utensils that are not safe to use for microwaving. If in doubt, you can test the utensil in question following the procedure below.

Utensil Test:

1. Fill a microwave-safe container with 1 cup of cold water (250ml) along with the utensil in question.
2. Cook on maximum power for 1 minute.
3. Carefully feel the utensil. If the empty utensil is warm, do not use it for microwave cooking.
4. Do not exceed 1 minute cooking time.

Materials you can use in microwave oven

Utensils	Remarks
Aluminum foil	Shielding only. Small smooth pieces can be used to cover thin parts of meat or poultry to prevent overcooking. Arcing can occur if foil is too close to oven walls. The foil should be at least 1 inch (2.5cm) away from oven walls.
Browning dish	Follow manufacturer* instructions. The bottom of browning dish must be at least 3/16 inch (5mm) above the turntable. Incorrect usage may cause the turntable to break.
Dinnerware	Microwave-safe only. Follow manufacturer's instructions. Do not use cracked or chipped dishes.
Glass jars	Always remove lid. Use only to heat food until just warm. Most glass jars are not heat resistant and may break.
Glassware	Heat-resistant oven glassware only. Make sure there is no metallic trim. Do not use cracked or chipped dishes.
Oven cooking bags	Follow manufacturer* instructions. Do not close with metal tie. Make slits to allow steam to escape.
Paper plates and cups	Use for short*erm cooking/warming only. Do not leave oven unattended while cooking.
Paper towels	Use to cover food for reheating and absorbing fat. Use with supervision for a short-term cooking only.
Parchment paper	Use as a cover to prevent splattering or a wrap for steaming.
Plastic	Microwave-safe only. Follow the manufacturer* instructions. Should be labeled "Microwave Safe". Some plastic containers soften, as the food inside gets hot. "Boiling bags" and tightly closed plastic bags should be slit, pierced or vented as directed by package.
Plastic wrap	Microwave-safe only. Use to cover food during cooking to retain moisture. Do not allow plastic wrap to touch food.
Thermometers	Microwave-safe only (meat and candy thermometers).
Wax paper	Use as a cover to prevent splattering and retain moisture.

Materials to be avoided in microwave oven

Utensils	Remarks
Aluminum tray	May cause arcing. Transfer food into microwave-safe dish.
Food carton with metal handle	May cause arcing. Transfer food into microwave-safe dish.
Metal or metal-trimmed utensils	Metal shields the food from microwave energy. Metal trim may cause arcing.
Metal twist ties	May cause arcing and could cause a fire in the oven.
Paper bags	May cause a fire in the oven.
Plastic foam	Plastic foam may melt or contaminate the liquid inside when exposed to high temperature.
Wood	Wood will dry out when used in the microwave oven and may split or crack.

SETTING UP YOUR OVEN

Names of Oven Parts and Accessories

Remove the oven and all materials from the carton and oven cavity.

Your oven comes with the following accessories:

Glass tray	1
Turntable ring assembly	1
Instruction Manual	1

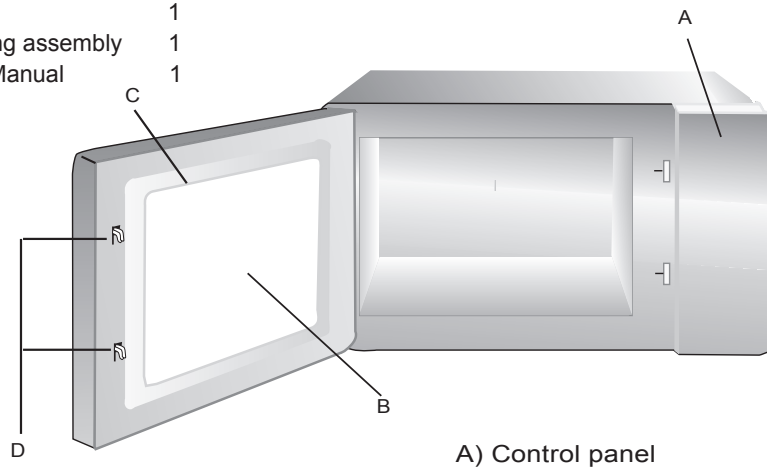

A) Control panel
B) Observation window
C) Door assembly
D) Safety interlock system

OPERATION

Control Panel and Features

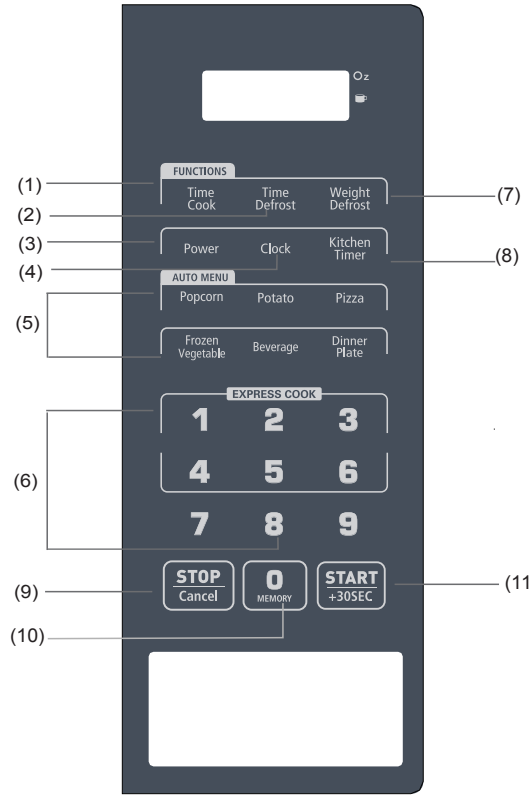

(1) Time Cook
(2) Time Defrost
(3) Power
(4) Clock
(5) Auto menu: Popcorn, Potato, Pizza, Frozen Vegetable, Beverage, Dinner Plate
(6) Number Buttons: 0-9
(7) Weight Defrost
(8) Kitchen Timer function
(9) Stop/Cancel: clears all previous setting pressed before cooking starts. During cooking: press once to stop oven; twice to stop and clear all entries.
(10) Memory function
(11) Start/+30Sec.

OPERATION

1. Power Level

11 power levels are available.

Level	10	9	8	7	6	5	4	3	2	1	0
Power	100%	90%	80%	70%	60%	50%	40%	30%	20%	10%	0%
Display	PL10	PL9	PL8	PL7	PL6	PL5	PL4	PL3	PL2	PL1	PL0

2. Clock Setting

(1) Press " CLOCK ", "00:00" will display.

(2) Press the number keys and enter the current time. For example, time is 10:12 now, please press " 1,0,1,2" .

(3) Press " CLOCK " to finish clock setting. ":" will flash and the clock will be lit.

(4) If the numbers are not within the range of 1:00-12:59, the setting will be invalid until valid numbers are input.

Note: (1) In the process of clock setting, if the " STOP/CANCEL" button is pressed or if there is no operation selected within 1 minute, the oven will go back to the previous setting automatically.

(2) If the clock needs to be reset, repeat steps 1- 3.

3. Kitchen Timer

(1) Press "KITCHEN TIMER ," LED will display "00:00".

(2) Press the number keys and enter the timer time. (The maximum cooking time is 99 minutes and 99 seconds.)

(3) Press " START/+30SEC. " to confirm setting.

(4) When the timer time arrives, the buzzer will beep 5 times.
If the clock is set, the LED will display the current time.

Note: 1) The kitchen timer is a timer and will not display the "Clock".
2) When using the kitchen timer, no program can be set.

4. Microwave Cook

(1) Press "TIME COOK" once, LED will display "00:00".

(2) Press number keys to input the cooking time. The maximum cooking time is 99 minutes and 99 seconds.

(3) Press " POWER " once, LED will display "PL10". The default power is 100% power. Now you can press number keys to adjust the power level.

(4) Press " START/+30SEC." to start cooking.

Example: to cook the food with 50% microwave power for 15 minutes.

a. Press "TIME COOK" once. "00:00" displays.

b. Press "1","5","0","0" in order.

c. Press "POWER" once, then press "5" to select 50% microwave power.

d. Press "START/+30SEC." to start cooking.

Note:1) In the process of setting, if the " STOP/CANCEL" button is pressed or if there is no operation within 1 minute, the oven will go back to the previous setting automatically.

2) If "PL0" is selected, the oven will work with fan without power.

3) During microwave cooking, "POWER" can be pressed to change the power you need. After pressing "POWER", the current power will light for 3 seconds, now you can press number button to change the power. The oven will work with the selected power for the rest of the cooking time.

5. Speedy Cooking

(1) If not already cooking, press number pads 1-6 to quickly cook from 1-6 minutes at 100% power. Press " START/+30SEC." to increase the cooking time. The maximum cooking time is 99 minutes and 99 seconds.

(2) To cook for 30 seconds at 100% power, press "START/+30SEC". Each press on the the same button will increase cooking time by 30 seconds. The maximum cooking cooking time is 99 minutes and 99 seconds.

Note: During microwave cooking and time defrost, time can be added by pressing "START/30SEC." button.

6. Weight Defrost Function

(1) Press " WEIGHT DEFROST ", LED will display "dEF1".

(2) Press number buttons to input weight to be defrosted. Input the weight ranged between 4~100 Oz.

(3) Press " START/+30SEC. " to start defrosting and the cooking time remaining will be displayed.

Note: If the weight input is not within 4~100 Oz, the input will be invalid.

7. Time Defrost Function

(1) Press " TIME DEFROST ", LED will display "dEF2".

(2) Press number pads to input defrosting time. The effective time range is 0:01~99:99.

(3) The default microwave power is power level 3. If you want to change the power level, press " POWER " once, and the LED will display "PL 3", then press the number pad of the power level you wanted.

(4) Press " START/+30SEC. " to start defrosting. The remaining cooking time will be displayed.

8. POPCORN

a)Press " POPCORN " repeatedly until the package size of your popcorn appears in the display, "1.75", "3.0", "3.5" will display in order.

For example, press "POPCORN" once, "1.75" appears.

b) Press "START/+30 SEC." to cook, buzzer sounds once. When cooking finishes, buzzer will sound five times.

Important Information About Microwave Popcorn Feature

1. When selecting 3.0-3.5 ounces of popcorn, it is suggested that you fold down a triangle on each corner of the bag before cooking. Refer to the picture at right.

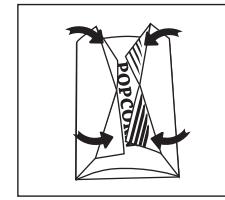

3. If/When the popcorn bag expands and no longer rotates properly, please press " STOP/CANCEL " button once and open the oven door and adjust the bag position to ensure even cooking.

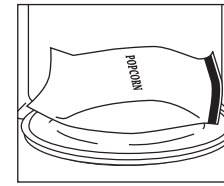

9. POTATO

a) Press " POTATO " repeatedly until the number you wish appears in the display, "1","2","3" will display in order.

"1": 1 potato (approximate 8 oz)

"2": 2 potatoes (approximate 16 oz)

"3": 3 potatoes (approximate 24 oz)

For example, press "POTATO" once, "1" appears.

b) Press "START/+30 SEC." to cook, buzzer sounds once. When cooking finishes, buzzer sounds five times.

10. FROZEN VEGETABLE

a) Press " FROZEN VEGETABLE " repeatedly until the package size of your vegetables appears in the display, "4.0", "8.0", "16.0" oz will display in order.

For example, press "FROZEN VEGETABLE" once, "4.0" appears.

b) Press "START/+30 SEC." to cook, buzzer sounds once. When cooking finishes, buzzer sounds five times.

11. BEVERAGE

a) Press " BEVERAGE " repeatedly until the number you wish appears in the display, "1", "2", "3" cup will display in order.
For example, press "BEVERAGE" once, "1" appears.

b) Press "START/+30 SEC." to cook, buzzer sounds once. When cooking finishes, buzzer sounds five times.

12. DINNER PLATE

a) Press " DINNER PLATE " repeatedly until the number you wish appears in the display, "9.0","12.0","18.0" oz will display in order.
For example, press "DINNER PLATE" once, "9.0" appears.

b) Press "START/+30 SEC." to cook, buzzer sounds once. When cooking finishes, buzzer sounds five times.

13. PIZZA

a) Press " PIZZA " repeatedly until the weight of your pizza appears in the display, "4.0", "8.0", "14.0" oz will display in order.
For example, press "PIZZA" once, "4.0" appears.

b) Press "START/+30 SEC." to cook, buzzer sounds once. When cooking finishes, buzzer sounds five times.

14. MEMORY FUNCTION

(1) Press "0/MEMORY" to choose memory setting 1-3. The LED will display 1,2,3.

(2) If the setting has been programmed, press " START/+30 SEC." to use it. If not, continue to choose the setting. Only one or two stages can be set.

(3) After finishing the setting, press "START/+30 SEC." once to save the setting. Press " START/+30 SEC." again, it will start cooking.

Example: to program the following setting as the second memory,
to cook the food with 80% microwave power for 3 minutes and 20 seconds.

The steps are as follows:

a. In waiting state, press "0/MEMORY" twice, the screen displays "2".

b.Press "TIME COOK" once, then press "3", "2", "0" in order.

c. Press "POWER" once, "PL10" displays, then press "8" and "PL8" displays.

d. Press "START/+30 SEC." to save the setting. Buzzer sounds once and the LED will display "2". If you press "START/+30SEC." again, the setting will be saved as memory 2 and it will start cooking.

e. If power is lost, the "0/MEMORY" setting will need to be reprogrammed.

f. If you want to run the saved setting, in waiting state, press "0/MEMORY" twice, screen displays "2", then press "START/+30SEC." to run.

15. Multi-stage Cooking

At most, 2 stages can be set for cooking. In multi-stage cooking, if one stage is defrosting, then defrosting shall be placed at the first stage automatically.

Note: Auto cooking cannot work in the multi-stage cooking.

Example: if you want to cook with 80% microwave power for 5 minutes + 60% microwave power for 10 minutes. The cooking steps are as following:

(1) Press "TIME COOK" once, then press "5","0","0" to set the cooking time;

(2) Press "POWER" once, then press "8" to select 80% microwave power.

(3) Press "TIME COOK" once, then press "1","0","0","0" to set the cooking time;

(4) Press "POWER" once, then press "6" to select 60% microwave power.

(5) Press "START/+30 SEC." to start cooking.

16. INQUIRING FUNCTION

(1) In cooking state, press " CLOCK ", the LED will display clock for three seconds.

(2) In the microwave or multi-stage cooking, press " POWER " to inquire microwave power level, and the current microwave power will be displayed. After three seconds, the oven will turn back to the previous state.

17. LOCK FUNCTION FOR CHILDREN

Lock: In waiting state, press " STOP/CANCEL " for 3 seconds, there will be a long "beep" denoting the entering into the children-lock state; meanwhile, LED will display " ".

Lock Cancel: In locked state, press " STOP/CANCEL " for 3 seconds, there will be a long "beep" denoting that lock is released.

18. COOKING END REMINDING FUNCTION

When the cooking is over, the buzzer will sound 5 "beep" to alert user the cooking is finished.

19. OTHER SPECIFICATIONS

(1) In standby state, if the set clock digital tube displays current time, the icon " : " would flash; otherwise, it shows " 0:00 ".

(2) In setting function state, LED displays corresponding setting.

(3) In working or pause state, LED displays surplus cooking time.

Maintenance

Troubleshooting

Check your problem by using the chart below and try the solutions for each problem. If the microwave oven still does not work properly, contact the nearest authorized service center.

TROUBLE	POSSIBLE CAUSE	POSSIBLE REMEDY
Oven will not start	a. Electrical cord for oven is not plugged in. b. Door is open. c. Wrong operation is set.	a. Plug into the outlet. b. Close the door and try again. c. Check instructions.
Arcing or sparking	a. Materials to be avoided in microwave oven were used. b. The oven is operated when empty. c. Spilled food remains in the cavity.	a. Use microwave-safe cookware only. b. Do not operate with oven empty. c. Clean cavity with wet towel.
Unevenly cooked foods	a. Materials to be avoided in microwave oven were used. b. Food is not defrosted completely. c. Cooking time, power level is not suitble. d. Food is not turned or stirred.	a. Use microwave-safe cookware only. b. Completely defrost food. c. Use correct cooking time, power level. d. Turn or stir food.
Overcooked foods	Cooking time, power level is not suitable.	Use correct cooking time, power level.
Undercooked foods	a. Materials to be avoided in microwave oven were used. b. Food is not defrosted completely. c. Oven ventilation ports are restricted. d. Cooking time, power level is not suitable.	a. Use microwave-safe cookware only. b. Completely defrost food. c. Check to see that oven ventilation ports are not restricted. d. Use correct cooking time, power level.
Improper defrosting	a. Materials to be avoided in microwave oven were used. b. Cooking time, power level is not suitable. c. Food is not turned or stirred.	a. Use microwave-safe cookware only. b. Use correct cooking time, power level. c. Turn or stir food.