Microwave Oven

INSTRUCTION MANUAL

Model:EMA34G5MA-S

Read these instructions carefully before using your microwave oven, and keep it carefully.

If you follow the instructions, your oven will provide you with many years of good service.

SAVE THESE INSTRUCTIONS CAREFULLY

PRECAUTIONS TO AVOID POSSIBLE EXPOSURE TO EXCESSIVE MICROWAVE ENERGY

(a) Do not attempt to operate this oven with the door open since open-door operation can result in harmful exposure to microwave energy.
It is important not to defeat or tamper with the safety interlocks.

(b) Do not place any object between the oven front face and the door or allows soil or cleaner residue to accumulate on sealing surfaces.

(c) Do not operate the oven if it is damaged. It is particularly important that the oven door close properly and that there is no damage to the:
(1) DOOR (bent)
(2) HINGES AND LATCHES (broken or loosened)
(3) DOOR SEALS AND SEALING SURFACES

(d) The oven should not be adjusted or repaired by anyone except properly qualified service personnel.

Specifications

Model:	EMA34G5MA-S
Rated Voltage:	208/230V~60Hz
Rated Input Power(Microwave):	2800W
Rated Output Power(Microwave):	1800W
Oven Capacity:	34L
External Dimensions:	574×528×368mm
Net Weight:	Approx. 32.3kg

IMPORTANT SAFETY INSTRUCTIONS

When using electrical appliances basic safety precautions should be followed, including the following:

WARNING - To reduce the risk of burns, electric shock, fire, injury to persons or exposure to excessive microwave energy:

1. Read all instructions before using the appliance.
2. Read and follow the specific: "PRECAUTIONS TO AVOID POSSIBLE EXPOSURE TO EXCESSIVE MICROWAVE ENERGY" found on page 2.
3. This appliance must be grounded. Connect only to properly grounded outlet. See "GROUNDING INSTRUCTIONS" found on page 4.
4. Install or locate this appliance only in accordance with the provided installation instructions.
5. Some products such as whole eggs and sealed containers - for example, closed glass jars - are able to explode and should not be heated in this oven.
6. Use this appliance only for its intended use as described in the manual. Do not use corrosive chemicals or vapors in this appliance. This type of oven is specifically designed to heat, cook or dry food. It is not designed for industrial or laboratory use.
7. As with any appliance, close supervision is necessary when used by children.
8. Do not operate this appliance if it has a damaged cord or plug, if it is not working properly, or if it has been damaged or dropped.
9. This appliance should be serviced only by qualified service personnel. Contact nearest authorized service facility for examination, repair, or adjustment.
10. Do not cover or block any openings on the appliance.
11. Do not store this appliance outdoors. Do not use this product near water - for example, near a kitchen sink, in a wet basement, near a swimming pool, or similar location.
12. Do not immerse cord or plug in water.
13. Keep cord away from heated surface.
14. Do not let cord hang over edge of table or counter.
15. When cleaning surfaces of door and oven that comes together on closing the door, use only mild, nonabrasive soaps, or detergent applied with a sponge or soft cloth.
16. To reduce the risk of fire in the oven cavity:
    1). Do not overcook food. Carefully attend appliance when paper, plastic, or other combustible materials are placed inside the oven to facilitate cooking.
    2). Remove wire twist-ties from paper or plastic bag before placing bag in oven.
    3). If material inside of the oven ignite, keep oven door closed, turn oven off, and disconnect the power cord, or shut off power at the fuse or circuit breaker panel.
    4). Do not use the cavity for storage purposes. Do not leave paper products, cooking utensils, or food in the cavity when not in use.
17. Liquids, such as water, coffee, or tea are able to be overheated beyond the boiling point without appearing to be boiling. Visible bubbling or boiling when the container is removed from the microwave oven is not always present.

THIS COULD RESULT IN VERY HOT LIQUID SUDDENLY BOILING OVER WHEN THE CONTAINER IS DISTURBED OR A UTENSIL IS INSERTED INTO THE LIQUID.

To reduce the risk of injury to persons:

1) Do not overheat the liquid.
2) Stir the liquid both before and halfway through heating it.
3) Do not use straight-sided containers with narrow necks.
4) After heating, allow the container to stand in the microwave oven for a short time before removing the container.
5) Use extreme care when inserting a spoon or other utensil into the container.

SAVE THESE INSTRUCTIONS

GROUNDING INSTRUCTIONS

This appliance must be grounded. In the event of an electrical short circuit, grounding reduces the risk of electric shock by providing an escape wire for the electric current. This appliance is equipped with a cord having a grounding wire with a grounding plug. The plug must be plugged into an outlet that is properly installed and grounded.

WARNING - Improper use of the grounding can result in a risk of electric shock.

Consult a qualified electrician or serviceman if the grounding instructions are not completely understood, or if doubt exists as to whether the appliance is properly grounded. If it is necessary to use an extension cord, use only a 3-wire extension cord that has a 3-blade grounded plug, and 3-slot receptacle that will accept the plug on the appliance. The marked rating of the extension cord shall be equal to or greater than the electrical rating of the appliance.

DANGER - Electric Shock Hazard
Touching some of the internal components can cause serious personal injury or death. Do not disassemble this appliance.

WARNING - Electric Shock Hazard
Improper use of the grounding can result in electric shock. Do not plug into an outlet until appliance is properly installed and grounded.

1. A short power-supply cord is provided to reduce the risks resulting from becoming entangled in or tripping over a longer cord.
2. Longer cord sets or extension cords are available and may be used if care is exercised in their use.
3. If a long cord or extension cord is used:
   1) The marked electrical rating of the cord set or extension cord should be at least as great as the electrical rating of the appliance.
   2) The extension cord must be a grounding-type 3-wire cord.
   3) The longer cord should be arranged so that it will not drape over the counter top or tabletop where it can be pulled on by children or tripped over unintentionally.

RADIO INTERFERENCE

1. Operation of the microwave oven may cause interference to your radio, TV or similar equipment.
2. When there is interference, it may be reduced or eliminated by taking the following measures:
   1) Clean door and sealing surface of the oven
   2) Reorient the receiving antenna of radio or television.
   3) Relocate the microwave oven with respect to the receiver.
   4) Move the microwave oven away from the receiver.
   5) Plug the microwave oven into a different outlet so that microwave oven and receiver are on different branch circuits.

UTENSILS

CAUTION - Personal Injury Hazard

Tightly-closed utensils could explode. Closed containers should be opened and plastic pouches should be pierced before cooking.

See the instructions on "Materials you can use in microwave oven or to be avoided in microwave oven."

There may be certain non-metallic utensils that are not safe to use for microwaving. If in doubt, you can test the utensil in question following the procedure below.

Utensil Test:

1. Fill a microwave-safe container with 1 cup of cold water (250ml) along with the utensil in question.
2. Cook on maximum power for 1 minute.
3. Carefully feel the utensil. If the empty utensil is warm, do not use it for microwave cooking.
4. Do not exceed 1 minute cooking time.

Materials you can use in microwave oven

Utensils	Remarks
Browning dish	Follow manufacturer* instructions. The bottom of browning dish must be at least 3/16 inch (5mm) above the turntable. Incorrect usage may cause the turntable to break.
Dinnerware	Microwave-safe only. Follow manufacturer's instructions. Do not use cracked or chipped dishes.
Glass jars	Always remove lid. Use only to heat food until just warm. Most glass jars are not heat resistant and may break.
Glassware	Heat-resistant oven glassware only. Make sure there is no metallic trim. Do not use cracked or chipped dishes.
Oven cooking bags	Follow manufacturer* instructions. Do not close with metal tie. Make slits to allow steam to escape.
Paper plates and cups	Use for short*erm cooking/warming only. Do not leave oven unattended while cooking.
Paper towels	Use to cover food for reheating and absorbing fat. Use with supervision for a short-term cooking only.
Parchment paper	Use as a cover to prevent splattering or a wrap for steaming.
Plastic	Microwave-safe only. Follow the manufacturer* instructions. Should be labeled "Microwave Safe". Some plastic containers soften, as the food inside gets hot. "Boiling bags" and tightly closed plastic bags should be slit, pierced or vented as directed by package.
Plastic wrap	Microwave-safe only. Use to cover food during cooking to retain moisture. Do not allow plastic wrap to touch food.
Thermometers	Microwave-safe only (meat and candy thermometers).
Wax paper	Use as a cover to prevent splattering and retain moisture.

Materials to be avoided in microwave oven

Utensils	Remarks
Aluminum tray	May cause arcing. Transfer food into microwave-safe dish.
Food carton with metal handle	May cause arcing. Transfer food into microwave-safe dish.
Metal or metal-trimmed utensils	Metal shields the food from microwave energy. Metal trim may cause arcing.
Metal twist ties	May cause arcing and could cause a fire in the oven.
Paper bags	May cause a fire in the oven.
Plastic foam	Plastic foam may melt or contaminate the liquid inside when exposed to high temperature.
Wood	Wood will dry out when used in the microwave oven and may split or crack.

SETTING UP YOUR OVEN

Names of Oven Parts and Accessories

Remove the oven and all materials from the carton and oven cavity.

Your oven comes with the following accessories:

Instruction Manual 1

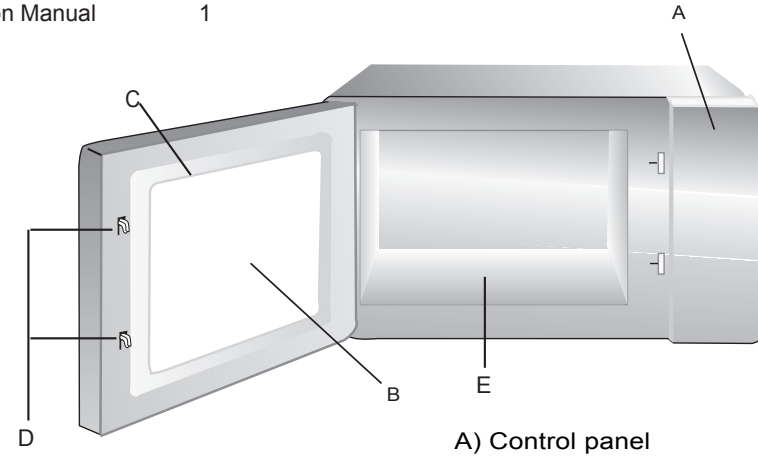

A) Control panel
B) Observation window
C) Door assembly
D) Safety interlock system
E) Ceramic board

Note: 1) Don't press the ceramic board forcibly.
2) Take and put the utensils gently during the operation in order to avoid damage to the ceramic board.
3) After using, don't touch the ceramic board by hand in order to avoid high temperature scald.

Countertop Installation

Remove all packing material and accessories. Examine the oven for any damage such as dents or broken door. Do not install if oven is damaged.

Cabinet: Remove any protective film found on the microwave oven cabinet surface.

Installation

1. Select a level surface that provide enough open space for the intake and/or outlet vents(Figure1).

Fig 1

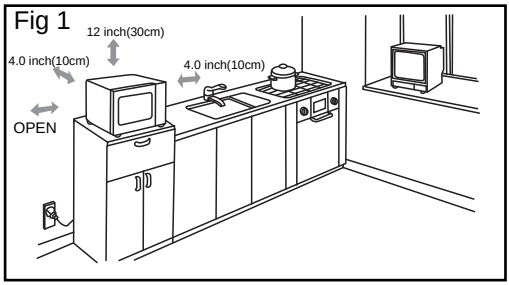

A 10-cm spacing should be kept between the appliance and right and back walls, and a 30-cm spacing kept on the top.Never dismantle the applicance's feet ,nor block the air intake and exhaust opening. The left side must be open.

1) Blocking the intake and/or outlet openings can damage the oven.
2) Place the oven as far away from radios and TV as possible. Operation of microwave oven may cause interference to your radio or TV reception.
3) Plug your oven into a standard household outlet. Be sure the voltage and the frequency is the same as the voltage and the frequency on the rating label.
4) Warning: The plug socket,electric appliances or the appliance which are liable effected by heat and moisture should be kept away from any vents on the oven.

2. The applicance can be installed with a degree of overlap(Figure2). The maximum overlap height is two layers.

(A) loosening screw,Taking off installation board , then replacing screw in its place tightly.

(B) taking off four screws as shown in the picture.

(C) putting installation board to the following location then fixing screw just taking off tightly

Fig 2

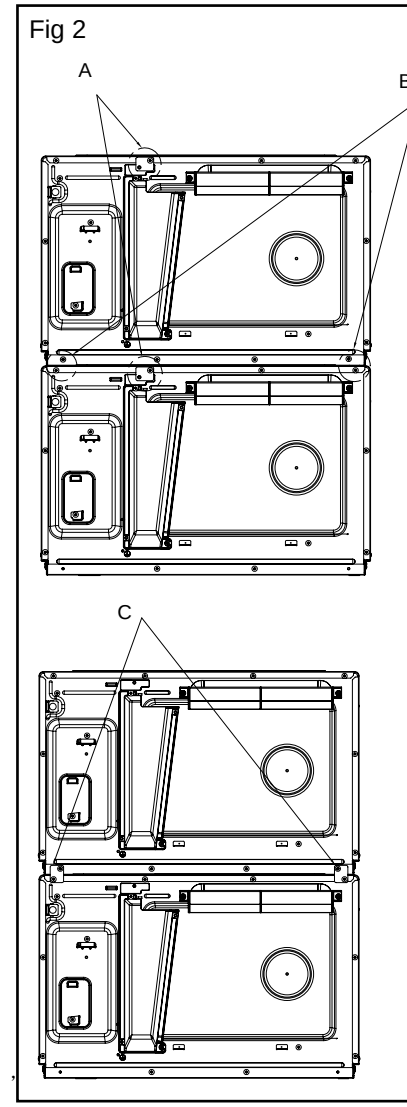

Cleaning Instructions

Always keep the oven clean

1. Cleaning the glass viewing window, the inner door panel and oven front face.
   For best performance and to maintain the high degree of safety, the inner door panel and oven front face should be free of food or grease build-up. Wipe these parts with a mild detergent, rinse and wipe dry. Never use abrasive powders or pads.

2. Cleaning the control panel and plastic parts.

Do not apply a detergent or an alkaline liquid spray to the control panel and plastic parts, as this may cause damage to these parts.
Use a dry cloth (not a soaked cloth) to clean these parts.

3. Cleaning the oven interior

After use be sure to clean up spilled liquids, spattered oil and food debris as quickly as possible. If the oven is used when dirty, efficiency drops and the dirt gets stuck on the oven surface and may cause bad odours. Clean the interior with a cloth soaked in luke-warm water with a mild detergent dissolved in it, then rinse the soap off with a damp cloth.

4. Cleaning the oil blockage regularly, keep the oil blockage clear .Otherwise,the stain on the oil blockage will drop on the food.

5. Cleaning the filter regularly, keep it clear .The appliance will over heat when the filter is blocked.

6.When the appliance is operated,oil blockage and filter location must correct,avioding to damage other parts(the installation in page 20 and 21).

CAUTION: Do Not wipe plastic and painted sections of the oven with bleach, thinners or other cleaning agents, as this may cause these parts to dissolve or change sharp.

OPERATION

Control Panel and Features

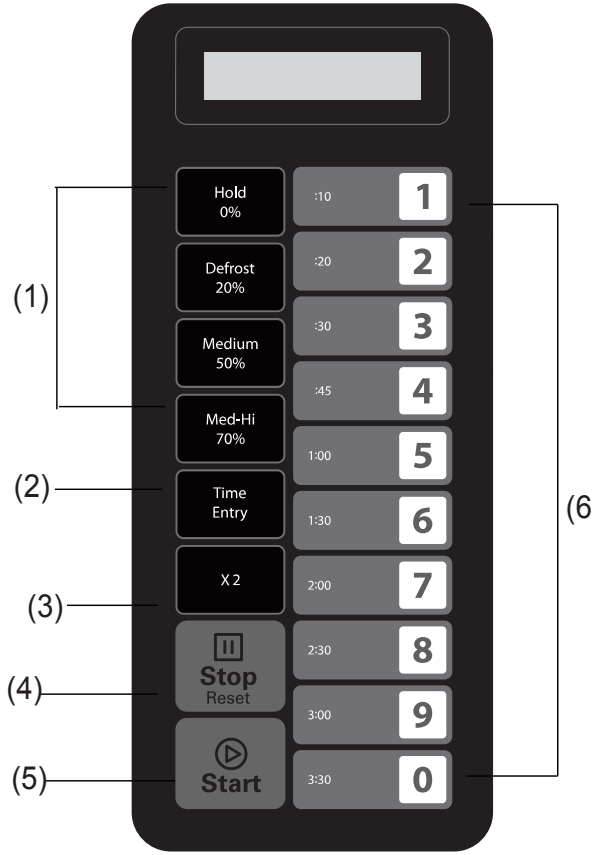

(1) Power Buttons
(2) Time Entry Button
(3) Double Quantity Button
(4) Stop/Reset Button
(5) Start Button
(6) Number Keyboard

OPERATION INSTRUCTION

Appendix. A User Options

Items bolded below are the default values.

Option	Setting	Discription
1 EOC Tone	**OP:10**	**3 seconds beep**
	OP:11	Continuous beep
	OP:12	5 quick beeps,Repeating
2 Beeper Volume	OP:20	Beeper Off
	OP:21	Low
	OP:22	**Medium**
	OP:23	High
3 Beeper On/Off	OP:30	Keybeep Off
	OP:31	**Keybeep On**
4 Keyboard Window	OP:40	15 seconds
	OP:41	30 seconds
	OP:42	**60 seconds**
	OP:43	120 seconds
5 On the Fly	OP:50	On-the-Fly Disable
	OP:51	**On-the-Fly Enable**
6 Door Reset	**OP:60**	**Door reset Disable**
	OP:61	Door Reset Enable
7 Max time	**OP:70**	**60 Minute Maximum Cook Time**
	OP:71	10 Minute Maximum Cook Time
8 Manual Programming	OP:80	Manual Programming Disable
	OP:81	**Manual Programming Enable**
9 Double Digit	**OP:90**	**Single Digit Mode-10 programs**
	OP:91	Doule Digit Mode-100 programs

Appendix. B Default Cook Times

The oven shall ship with the following Preset Cook Times unless otherwise noted in the product Specification.

Button	Display (Time)	Power	Cook Factors
1	0:10	100%	80%
2	0:20	100%	80%
3	0:30	100%	80%
4	0:45	100%	80%
5	1:00	100%	80%
6	1:30	100%	80%
7	2:00	100%	80%
8	2:30	100%	80%
9	3:00	100%	80%
0	3:30	100%	80%

1. Power Up

" ------- " displays when the oven is electrified for the first time. If " II " button pressed, the oven will change to idle mode.
Note: Under idle mode, no button can be pressed.

2. Idle Mode

1) Entry.The oven shall enter idle mode after a set of seconds have expired in Ready Mode without a keyboard press or a door open and close. The number of seconds is determined by the keyboard Timeout Window, set by User Option 4.
2) During idle mode,the screen is blank.And there shall be no oven activity.
3) Opening and then closing the oven door, the oven will exit the idle mode and into ready mode.

3. Ready Mode

1) In this mode, the oven is ready to either begin a manual or preset cook cycle.
2) Opening and closing the door while the oven is in Idle Mode will put the oven into Ready Mode.
2) During Ready Mode, "READY" displays.
3) From the Ready Mode, the oven can go to almost all of the other modes.

4. Door Open Mode

1) While the door of the oven is open, the oven shall be in Door Open Mode.
2) During this mode, the screen is blank. And the fan and oven lamp work.
3) When the door is closed, if User Option OP:60 is selected and the oven was running a manual or preset cook cycle, the oven shall enter Pause Mode.
In all other cases, the oven shall return to Door open Mode with User Option OP:61 set,opening and closing the door will clear out any information about a Manual or Preset Program which was running.

5. Pause Mode

1) This mode allow the users to temporarily stop the cooking cycle to inspect or stir the food item.
2) While in Manual Cook Mode, or Preset Program Cook Mode, if the door is open or closed, or if the " II " pad is pressed, the oven will enter Pause Mode.
3) While paused, the screen will display the remaining cooking time.
4) Pause Mode will expire back to Idle Mode in the exact fashion as Ready Mode, dependent on User Option 4. Additionally,if the " II " button is pressed, the oven shall immediately enter Ready Mode.OR if press " ▷ " button, the oven will go into working mode.

6. Manual Cook Entry Mode

1) The user may manuallly enter a cook time and power level while in this mode.
2) While the oven is in the Ready Mode,pressing the "Time Entry" pad on the keyboard will put the oven into Manual Cook Entry Mode.
3) During this mode, "00:00" displays,input the time you need.
4) If you press "Hold 0% "," Defrost 20%","Medium 50%" or "Med-Hi 70%" button to select power level, the screen will display the related power. If the same button pressed twice, the power will change to PL10. If no power chosen, "PL10" is default.
5) During setting process, press " ▷ " to enter Manual Cook Mode.
   Press " II " to enter Ready Mode.

7. Manual Cook Mode

1) This mode allows cooking of the food items.While in Manual Cook Entry Mode, pressing the " ▷ " pad will cause to the oven to begin Manual Cook Mode.
2) During this mode, remaning cooking time displays. The fan and oven lamp will light.
3) When cooking program finish, the oven will enter End of Cook Cycle Mode.
   If you press " II " button under this mode,the oven will enter Pause Mode.

8. End of Cook Cycle Mode

1) After the time has expired in a Manual Cook Mode, or a Preset Program Cook Mode, the oven shall go into The End of Cook Cycle Mode.
2) During this mode, "DONE" displays.
3) If either User Option OP:11 or "OP:12" is selected, the oven shall continue to sound until the user acknowledges this by either opening and closing the door or pressing the " II " pad. If User Option OP:10 is selected, after the 3 second beep, the oven shall go into Idle Mode.

9. Preset Program Cook Mode

1) This mode allows cooking of food items through a one pad touch operation. While in Ready Mode,pressing one of ten digit keys on the keyboard will cause the oven to run the Preset Program associated with that key.
2) During this mode, the screen displays the remaining cooking time. If it is multi-stage cooking, the total remaning cooking time displays not a particular stage cooking time.
3) When cooking program finish, the oven will enter End of Cook Cycle Mode. If you press " II " button under this mode,the oven will enter Pause Mode.

10. On the Fly Cooking

1) While the oven is cooking, if User Option OP:51 is selected,press number buttons, the preset cooking program will start automatically.
2) The screen displays the remaining cooking time.
3) When cooking program finish, the oven will enter End of Cook Cycle Mode.

11. Programming Mode

This mode allows the user to assign cook times and power levels to the once touche button.

1) Open the door and press "1" pad for 5 seconds,the buzzer will sound once and enter to Programming Mode.

2) "PROGRAM" displays. you can input the time you need.

3) Press "Hold 0% "," Defrost 20%","Medium 50%" or "Med-Hi 70%" to input the power level. the screen will display the related power. If the same button pressed twice, the power will change to PL10. If no power chosen, "PL10" is default.

Note: Set the time first,then choose the power.

4) To change the cooking fators: If press "X2",the screen will display "CF:XX". The default factor is 80%. "CF:08" displays. If you need to change the cooking factor, just press one of the number buttons to set.

5) After setting the time and power, press " ▷ ", the cooking program will be saved. When the program saved, "PROGRAM" displays.

6) If all the cooking time exceeds the MAX.time User Option 7, when press " ▷ " to save the program, the buzzer will sound three times briefly to tell you the time is no use. And then the screen turn back to display "PROGRAM". The time set before will be no change.

7) Close the door, the oven will turn back to Ready Mode.

If press " II " button during setting process, the oven turn to Door Open Mode. The program that not saved will be lost. If there is program saved as memory procedure, press the related number button, the saved program will start. If no saved program, the buzzer will alarm when pressing number button and it will not work.

For example: set the program as memory cooking. Power level PL7 and cooking time is 1 minute and 25 seconds.

Step1: Open the door, press number button "1" for 5 seconds,"PROGRAM" displays.

Step 2: Press number button "3", the screen will display "P:03",After two seconds, the screen will display the related time " :30".

Step 3: Press number buttons "1", "2" and "5" to input the cooking time.

Step 4: Press "Med-Hi/70% " button," 1:25 70" displays. Setting finished.

Step 5: Press " ▷ " to save. When use the program next time, just press "3", the related program will start.

Note:

1. If the electricity is cut off, the saved program will not lost.
2. If the program need to reset , just repeat the aboved steps.
3. If press " II " at the last step, it will turn back to Ready Mode. The setting will be no use.

12. Double Quantity cooking

1) Through the use of the X2 pad, the user can easily set the time two of a particalar food item.

2) If the "X2" button is pressed in ready mode, followed by the starting of a Preset Program, or if the "X2" button is pressed in 5 secondes of starting a Preset Program, the oven will start cooking with the quantity preset cooking time.

3) Press "X2", "DOUBLE" displays. When press number buttons, the screen will display the quantity preset time.

For example, number button "5" and its preset time is 1 minute. Then press "X2", then time will change to 1:00*(1+0.8)=1:48(1 minute and 48 seconds)

4) When cooking program finish, the oven will enter End of Cook Cycle Mode.

Note: This function can be used under preset programme mode.

13. Stage Cooking Programming

This allows the user to cook food items at manual cook mode and programming mode.

1) Three stages can be set at most under cooking mode or programming mode.

Aftet setting the power and time for the first stage, press " Time Entry " to set the second stage. And the same step to set the third stage.

2) When setting the second, third stage, press " Time Entry", "STAGE-2","STAGE-3" displays.

3) Press " ▷ " button to start cooking.

Example: In programming mode,press number buttons "3" to set two stages cooking. The first stage is PL7 and time is 1 minute 25 seconds. The second stage is PL5 and 5 minutes and 40 seconds. The steps are follow.

a.Open the door,press number button "1" for 5 seconds,"PROGRAM" displays.

b. Press number button "3", the screen will display "P:03",After two seconds, the screen will display the related time " :30".

c.Press "1","2","5" to input the cooking time. "1:25" displays.

d. Press "Med-Hi 70% ", "1:25 70" displays.
The first stage is finished.

e. Press " Time Entry", "STAGE-2" displays.

f. Press "5", "4","0" button, "5:40" displays.

g.Press "Medium 50% ", "5:40 50" displays.
The second stage is finished.

h. Press " ▷ " button to start cooking.

i.The total time coutns down.

14. Use Option Mode

This allows the user choose between various ways for the oven to operate.

1) Open the oven door and press "2" pad for 5 seconds. The buzzer sounds once and enter this mode.
2) The screen displays "OP: - -".
3) Press any number button to enter related mode setting.
   For example: to set the voice of the buzzer to medium. Press " 2 ", "OP:22" displays.
   If you want to change, keep pressing "2", the screen displays "OP:20", "OP:21","OP:22", "OP:23", "OP:20" .....in cycle.
4) Press " ▷ " to save the current setting. After saved, "OP: - -" display again.
5) During setting process, press " II " to enter Door Open Mode. Close the door will enter Ready Mode.
6) If " ▷ " button not pressed at the last step, the program cannot be saved but stay at previous way.

15. Service Mode

1) Open the oven door and press "3" pad for 5 seconds to enter service mode.
2) The screen displays "SERVICE".
3) To check the times of closing or opening the door, just press number button "3", the screen will display the times.
4) If press " 1 " pad for Tube Hours.
   If press " 2 " pad for Tube Cycles.
   If press " 3 " pad for Door Cycles..
   If press " 4 " pad to Clear service information.
   Only for some medels:
   If press " 5 " pad to run Top Mag. Oven displays amps.
   If press " 6 " pad to run Bottom Mag. Oven displays amps.
5) Press " II " to enter Door Open Mode. Close the door will enter Ready Mode.

16. Factory-default setting

In the Ready Mode,pressing " ▷ " and " 0 " to factory-default setting.

1) Press " ▷ " and " 0 ", the buzzer sounds once,and the screen will display "CHECK". If it is in the factory-default setting,the screen will display " 11 ,after three seconds, the oven turn to the ready mode Press" II ". to cancel the display ang back to ready back in the process of display. If not in the factory-default setting,the screen will display " 00 ", press" ▷ " to the factory-default setting, the screen will display " CLEAR ". the buzzer sounds once, after self-testing, the screen will display "11" or"00".
2) If do not press " ▷ " when the screen display " 00 ",the setting will cancel.

Note: Be careful in the operation as it will restore all configure to factort-default setting.

How to remove and install the filter

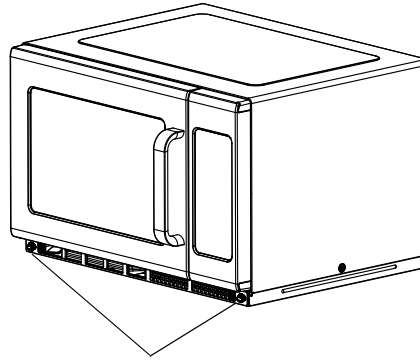

Turn the metal nails left to loosen them.

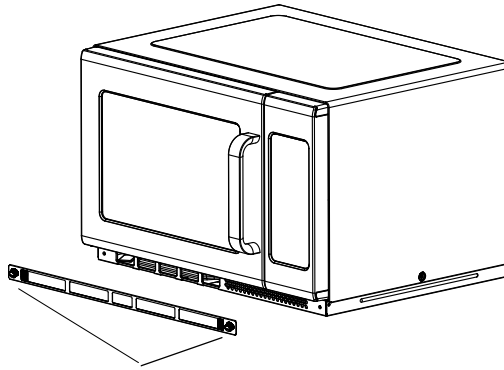

Take off the filter.

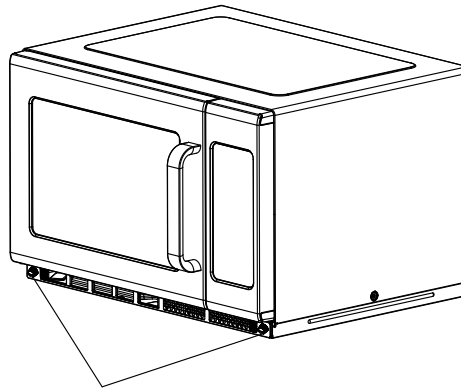

To restall,align the base plate mounting holes,
clockwise the metal nails to tighten .

How to remove and install the oil blockage

Warning:Before remove and install the oil blockage,be sure to unplug the appliance from the power supply,and avoid high temperature scald.

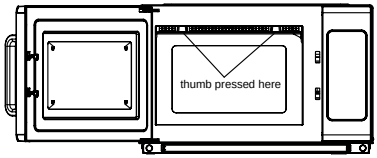

1 hands with oil blockage ,pressed on the arrow shown,pushed back slamly, then pulling down.

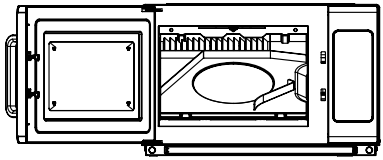

2.status of remove

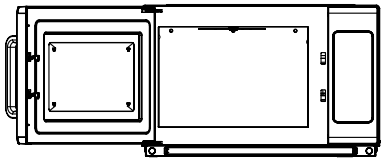

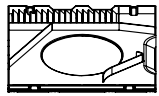

3.taking oil blockage from the appliance.

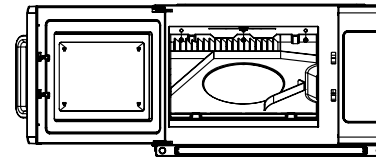

1.Hands to take the oil blockage,after alignment three cylinder of the oil blockage, inserting the three holes of the back plate.

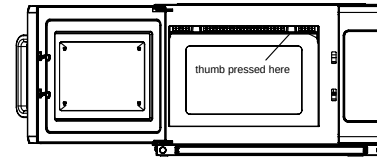

2.The left hand grasp the microwave, right thumb to press the arrow directions and forced to push back. And the left thumb hard pressed upword at the same time. put the right of oil blockage into the buckle of the front plate.

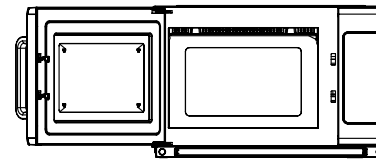

3.From right to left, make the oil blockage loaded. When finish, check to ensure that the oil blockage buckle completely go.

Installation (supplement)

1. The switching operation of this microwave oven can cause voltage fluctuations on the supply line. The operation of this oven under unfavorable voltage supply conditions can have adverse effects. This device is intended for the connection to a power supply system with a maximum permissible system impedance Zmax of **0.2 Ohms** at the interface point of the user's supply. The user has to ensure that this device is connected only to a power supply system which fulfills the requirement above. If necessary, the user can ask the public power supply company for the system impedance at the interface point.

2. If there is no equipotential bonding conductor in the electric supply, an external equipotential bonding conductor must be installed at the rear of the appliance (see symbol). This terminal shall be in effective electrical contact with all
fixed exposed metal parts and shall allow the connection of a conductor having a nominal cross-sectional area up to 10 mm².

Symbol for the external connection of equipotential bonding conductors.

MAINTENANCE

Troubleshooting

Check your problem by using the chart below and try the solutions for each problem. If the microwave oven still does not work properly, contact the nearest authorized service center.

TROUBLE	POSSIBLE CAUSE	POSSIBLE REMEDY
Oven will not start	a. Electrical cord for oven is not plugged in. b. Door is open. c. Wrong operation is set.	a. Plug into the outlet. b. Close the door and try again. c. Check instructions.
Arcing or sparking	a. Materials to be avoided in microwave oven were used. b. The oven is operated when empty. c. Spilled food remains in the cavity.	a. Use microwave-safe cookware only. b. Do not operate with oven empty. c. Clean cavity with wet towel.
Unevenly cooked foods	a. Materials to be avoided in microwave oven were used. b. Food is not defrosted completely. c. Cooking time, power level is not suitable. d. Food is not turned or stirred.	a. Use microwave-safe cookware only. b. Completely defrost food. c. Use correct cooking time, power level. d. Turn or stir food.
Overcooked foods	Cooking time, power level is not suitable.	Use correct cooking time, power level.
Undercooked foods	a. Materials to be avoided in microwave oven were used. b. Food is not defrosted completely. c. Oven ventilation ports are restricted. d. Cooking time, power level is not suitable.	a. Use microwave-safe cookware only. b. Completely defrost food. c. Check to see that oven ventilation ports are not restricted. d. Use correct cooking time, power level.
Improper defrosting	a. Materials to be avoided in microwave oven were used. b. Cooking time, power level is not suitable. c. Food is not turned or stirred.	a. Use microwave-safe cookware only. b. Use correct cooking time, power level. c. Turn or stir food.