User Manual

Microwave Oven

EN

Electrolux

electrolux.com\register

Welcome to Electrolux! Thank you for choosing our appliance.

For Customer Care support and webshop visit:
www.electrolux.com/support/

For extended version of User Manual visit:
www.electrolux.com/manuals/

Important safety instructions..... 3
Part names..... 8
Control panel..... 9
Before operating..... 10
Manual cooking..... 10
One touch cook..... 11
Sensor cooking..... 12
Convection cooking..... 14
Auto defrost..... 18
Microwave setting..... 19
Convenient features..... 20
Cleaning and care 21
Service call check..... 24
Specifications..... 24
Major appliance warranty information..... 25

This manual is your resource for the use and care of your product. Please read it before using your appliance. Keep it handy for quick reference. If something doesn't seem right, the troubleshooting section will help you with common issues.

FAQs, helpful tips and videos, cleaning products, and kitchen and home accessories are available at www.frigidaire.com.

We are here for you! Visit our website, chat with an agent, or call us if you need help. We may be able to help you avoid a service visit. If you do need service, we can get that started for you.

Let's make it official! Be sure to register your product.

Keep your product info here so it's easy to find.

Model Number:

Serial Number:

Purchase Date:

WARNING

PRECAUTIONS TO AVOID POSSIBLE EXPOSURE TO EXCESSIVE MICROWAVE ENERGY

(a) Do not attempt to operate this oven with the door open since open-door operation can result in harmful exposure to microwave energy. It is important not to defeat or tamper with the safety interlocks.

(b) Do not place any object between the oven front face and the door or allow soil or cleaner residue to accumulate on sealing surfaces.

(c) Do not operate the oven if it is damaged. It is particularly important that the oven door close properly and that there is no damage to the: (1) door (bent), (2) hinges and latches (broken or loosened), (3) door seals and sealing surfaces.

(d) The oven should not be adjusted or repaired by anyone except properly qualified service personnel.

IMPORTANT SAFETY INSTRUCTIONS

Definitions

⚠ This is the safety alert symbol. It is used to alert you to potential personal injury hazards. Obey all safety messages that follow this symbol to avoid possible injury or death.

⚠ WARNING

WARNING indicates a potentially hazardous situation which, if not avoided, could result in death or serious injury.

⚠ CAUTION

CAUTION indicates a potentially hazardous situation which, if not avoided, may result in minor or moderate injury.

READ ALL INFORMATION BEFORE USING

⚠ WARNING

To reduce the risk of fire, burns, electric shock, injury to persons, or exposure to excessive microwave energy when using your appliance, follow basic **caution, including the following sections**.

- Read all instructions before using the appliance.
- Read and follow the specific **"CAUTION TO AVOID POSSIBLE EXPOSURE TO EXCESSIVE MICROWAVE ENERGY"** on page 2.
- This appliance must be grounded. Connect only to properly grounded outlet. See **"GROUNDING INSTRUCTIONS"** on page 5.
- Install or locate this appliance only in accordance with the provided installation instructions.
- Some products such as whole eggs and sealed containers —for example, closed glass jars—are able to explode and should not be heated in this microwave oven.
- Use this appliance only for its intended use as described in this manual. Do not use corrosive chemicals or vapors in this appliance. This type of microwave oven is specifically designed to heat, cook or dry food. It is not designed for industrial or laboratory use.
- As with any appliance, close supervision is necessary when used by children.
- Do not operate this appliance if it has a damaged cord or plug, if it is not working properly or if it has been damaged or dropped.
- This appliance should be serviced only by qualified service personnel. Contact nearest Electrolux Authorized Servicer for examination, repair or adjustment.
- Do not cover or block any openings on the appliance.
- Do not store or use this appliance outdoors. Do not use this product near water—for example, near a kitchen sink, in a wet basement or near a swimming pool, or similar locations.
- Do not immerse cord or plug in water.
- Keep cord away from heated surfaces.
- Do not let cord hang over edge of table or counter.
- See door surface cleaning instructions on page 21.
- To reduce the risk of fire in the microwave oven cavity:
  - **Do not overcook food. Carefully attend appliance when paper, plastic or other combustible materials are placed inside the microwave oven to facilitate cooking.**
  - Remove wire twist-ties from paper or plastic bags before placing bag in microwave oven.
  - **If materials inside the microwave oven ignite, keep microwave oven door closed, turn microwave oven off and disconnect the power cord or shut off power at the fuse or circuit breaker panel.**
  - Do not use the cavity for storage purposes. Do not leave paper products, cooking utensils or food in the cavity when not in use.
- Liquids, such as water, coffee or tea are able to be overheated beyond the boiling point without appearing to be boiling. Visible bubbling or boiling when the container is removed from the microwave oven is not always present. **THIS COULD RESULT IN VERY HOT LIQUIDS SUDDENLY BOILING OVER WHEN A SPOON OR OTHER UTENSIL IS INSERTED INTO THE LIQUID.**

  To reduce the risk of injury to persons:
  - Do not overheat the liquid.
  - Stir the liquid both before and halfway through heating it.
  - Do not use straight-sided containers with narrow necks. Use a wide-mouthed container.
  - After heating, allow the container to stand in the microwave oven at least for 20 seconds before removing the container.
  - Use extreme care when inserting a spoon or other utensil into the container.
- Clean ventilation openings and grease filters frequently. Grease should not be allowed to accumulate on ventilation openings, louver or grease filters.
- Use care when cleaning the louver and the grease filters. Corrosive cleaning agents, such as lye-based oven cleaners, may damage the louver and the grease filters.
- When flaming food under the hood, turn the fan on.
- This appliance is suitable for use above both gas and electric cooking equipment 36" wide or less.

SAVE THESE INSTRUCTIONS

- When using the convection or combination cooking functions, both the outside and inside of the oven will become hot. Always use hot pads to remove containers of food and cooking accessories such as the oven shelf, round wire rack and glass tray.
- Do not clean with metal scouring pads. Pieces can burn off the pad and touch electrical parts involving risk of electric shock.
- *Thermometer*— Do not use regular cooking or oven thermometers when cooking by microwave or combination. The metal and mercur y in these thermometers could cause arcing and possible damage to the oven. Do not use a thermometer in food you are microwaving unless the thermometer is designed or recommended for use in the microwave oven.

WARNING

If you see arcing,press the **Cancel** button and correct the problem.

ARCING

Arcing is the microwave term for sparks in the oven. Arcing is caused by:

- The metal shelf not installed correctly so it touches the microwave wall.
- Metal or foil touching the side of the oven.
- Foil not molded to food (upturned edges act like antennas).
- Metal, such as twist-ties, poultry pins, or gold-rimmed dishes, in the microwave.
- Recycled paper towels containing small metal pieces being used in the microwave.

Federal Communications Commission Radio Frequency Interference Statement (U.S.A. Only)

This equipment generates and uses ISM frequency energy and if not installed and used properly, that is in strict accordance with the manufacturer's instructions, may cause interference to radio and television reception. It has been type tested and found to comply with limits for ISM Equipment pursuant to part 18 of FCC Rules, which are designed to provide reasonable protection against such interference in a residential installation.

However, there is no guarantee that interference will not occur in a particular installation. If this equipment does cause interference to radio or television reception, which can be determined by turning the equipment off and on, the user is encoura ged to try to correct the interference by one or more of the following:

- Reorient the receiving antenna of the radio or television.
- Relocate the microwave oven with respect to the receiver.
- Move the microwave oven away from the receiver.
- Plug the microwave oven into a different outlet so that the micr owave oven and the receiver are on different branch circuits.

The manufacturer is not responsible for any radio or television interference caused by unauthorized modification to this microwave oven. It is the responsibility of the user to correct such interference.

Short Cord Instruction: a) A short power-supply cord is provided to reduce the risks resulying from becoming entangled in or tripping over a longer cord. b) Longer cord sets or extension cords are available and may be used if care is extension in their use. c) If a long cord or extension cord is used: 1) The marked electrical rating of the cord set or extension cord should be at least as great as the electrical rating of the appliance; 2) The extension cord must be a grounding-type 3-wire cord; and 3) The longer cord should be arranged so that it will not drape over the counter top or tabletop where it can be pulled on by children or tripped over unintentionally.

VENTILATING HOODS: 1) Clean Ventilating Hoods Frequently – Grease should not be allowed to accumulate on hood or filter. 2) When flaming foods under the hood, turn the fan/on.

Usecare when cleaning the vent-hood filter. Corrosive cleaning agents, such as lye-based oven cleaners, may damage the filter.

Suitable for use above both gas and electric cooking equipment 36 inches wide or less.

UNPACKING AND EXAMINING YOUR MICROWAVE OVEN

Appliance is to be installed and grounding by a qualified technician. Open the bottom of the carton, bend the carton flaps back and tilt the microwave oven over to rest on plastic foam pad. Lift carton off microwave oven and remove all packing materials, Installation Instructions, Wall Template, Top Template, Charcoal Filter, Turntable and Turntable Support. SAVE THE CARTON AS IT MAY MAKE INSTALLATION EASIER.

- Remove the feature sticker from the outside of the door, if there is one.
- DO NOT REMOVE THE WAVEGUIDE COVER, which is located on the right in the microwave oven cavity. Check to see that there are Installation Instructions, Wall Template, Top Template and Charcoal Filter, which is used when recirculating is chosen. Read enclosures and SAVE the Use and Care Manual.

Check the microwave oven for any damage, such as misaligned or bent door, damaged door seals and sealing surfaces, broken or loose door hinges and latches and dents inside the cavity or on the door. If there is any damage, do not operate the microwave oven and contact your dealer or ELECTROLUX SERVICER. See Installation Instructions for more details.

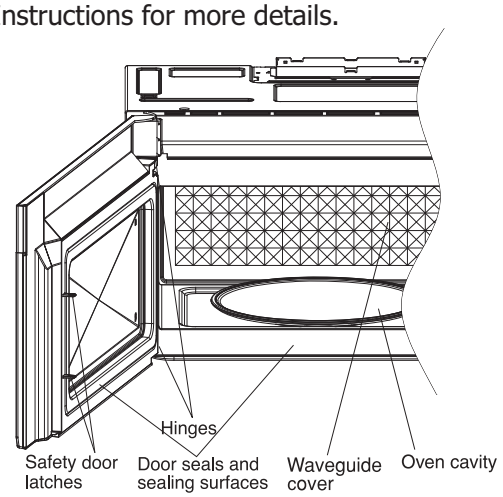

GROUNDING INSTRUCTIONS

This appliance must be grounded. This microwave oven is equipped with a cord having a grounding wire with a grounding plug. It must be plugged into a wall receptacle that is properly installed and grounded in accordance with the National Electrical Code and local codes and ordinances. In the event of an electrical short circuit, grounding reduces risk of electric shock by providing an escape wire for the electric current.

WARNING

Improper use of the grounding plug can result in a risk of electric shock.

Electrical Requirements

Check Installation Instructions for proper location for the power supply.

The electrical requirements are a 120 volt 60 Hz, AC only, 15 amp. or more protected electrical supply. It is recommended that a separate circuit serving only the microwave oven be provided.

The microwave oven is equipped with a 3-prong grounding plug. It must be plugged into a wall receptacle that is properly installed and grounded. DO NOT UNDER ANY CIRCUMSTANCES CUT OR REMOVE THE GROUNDING PIN FROM THE PLUG.
DO NOT USE AN EXTENSION CORD.

If the power supply cord is too short, have a qualified electrician or serviceman install an outlet near the appliance.

The Power Supply Cord and plug must be connected to a separate 120 Volt AC, 60 Hz, 15 Amp, or more branch circuit, single grounded receptacle. The receptacle should be located inside the cabinet directly above the Microwave Oven mounting location as shown in Figure 1.

NOTES

1. If you have any questions about the grounding or electrical instructions, consult a qualified electrician or service person.
2. Neither Electrolux nor the dealer can accept any liability for damage to the microwave oven or personal injury resulting from failure to observe the correct electrical connection procedures.

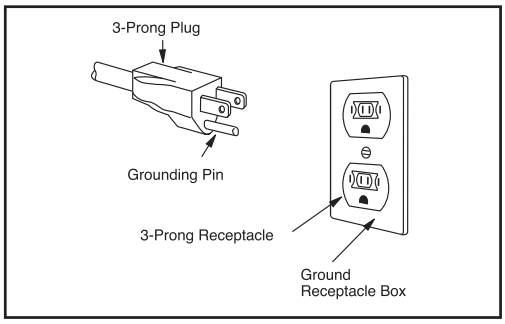

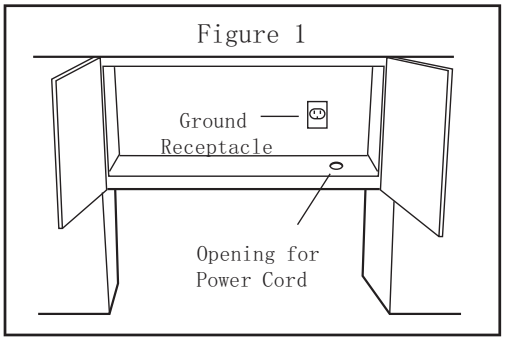

Figure 1

IMPORTANT SAFETY INSTRUCTIONS

ABOUT YOUR MICROWAVE OVEN

This Use and Care Manual is valuable: read it carefully and always save it for reference.

A good microwave cookbook is a valuable asset. Check it for microwave cooking principles, techniques, hints and recipes.

NEVER use the microwave oven without the turntable and support nor turn the turntable over so that a large dish could be placed in the microwave oven. The turntable will turn both clockwise and counterclockwise.

ALWAYS have food in the microwave oven when it is on to absorb the microwave energy.

When using the microwave oven at power levels below 100%, you may hear the magnetron cycling on and off. It is normal for the exterior of the microwave oven to be warm to the touch when cooking or reheating.

Condensation is a normal part of microwave cooking. Room humidity and the moisture in food will influence the amount of moisture that condenses in the microwave oven. Generally, covered foods will not cause as much condensation as uncovered ones. Ventilation openings must not be blocked.

The microwave oven is for food preparation only. It should not be used to dry clothes or newspapers.

Your microwave oven is rated 900 watts by using the IEC Test Procedure. In using recipes or package directions, check food a minute or two before the minimum time and add time accordingly.

ABOUT MICROWAVE COOKING

- Arrange food carefully. Place thickest areas towards outside of dish.
- Watch cooking time. Cook for the shortest amount of time indicated and add more as needed. Food severely overcooked can smoke or ignite.
- Cover foods while cooking. Check recipe or cookbook for suggestions: paper towels, wax paper, microwave plastic wrap or a lid. Covers prevent spattering and help foods to cook evenly.
- Shield with small flat pieces of aluminum foil any thin areas of meat or poultry to prevent overcooking before dense, thick areas are cooked thoroughly.
- Stir foods from outside to center of dish once or twice during cooking, if possible.
- Turn foods over once during microwaving to speed cooking of such foods as chicken and hamburgers. Large items like roasts must be turned over at least once.
- Rearrange foods such as meatballs halfway through cooking both from top to bottom and from the center of the dish to the outside.
- Add standing time. Remove food from microwave oven and stir, if possible. Cover for standing time which allows the food to finish cooking without overcooking.
- Check for doneness. Look for signs indicating that cooking temperatures have been reached.

  Doneness signs include:

  - Food steams throughout, not just at edge.
  - Center bottom of dish is very hot to the touch.
  - Poultry thigh joints move easily.
  - Meat and poultry show no pinkness.
  - Fish is opaque and flakes easily with a fork.

ABOUT FOOD

FOOD	DO	DON'T
Eggs, sausages, nuts, seeds, fruits & vegetables	• Puncture egg yolks before cooking to prevent "explosion". • Pierce skins of potatoes, apples, squash, hot dogs and sausages so that steam escapes.	• Cook eggs in shells. • Reheat whole eggs. • Dry nuts or seeds in shells.
Popcorn	• Use specially bagged popcorn for microwave cooking. • Listen while popping corn for the popping to slow to 1 or 2 seconds or use special **popcorn** pad.	• Pop popcorn in regular brown bags or glass bowls. • Exceed maximum time on popcorn package.
Baby food	• Transfer baby food to small dish and heat carefully, stirring often. Check temperature before serving. • Put nipples on bottles after heating and shake thoroughly. "Wrist" test before feeding.	• Heat disposable bottles. • Heat bottles with nipples on. • Heat baby food in original jars.
General	• Cut baked goods with filling after heating to release steam and avoid burns. • Stir liquids briskly before and after heating to avoid "eruption". • Use deep bowl, when cooking liquids or cereals, to prevent boil-overs.	• Heat or cook in closed glass jars or air tight containers. • Can in the microwave as harmful bacteria may not be destroyed. • Deep fat fry. • Dry wood, gourds, herbs or wet papers.

ABOUT UTENSILS AND COVERINGS

It is not necessary to buy all new cookware. Many pieces already in your kitchen can be used successfully in your new microwave oven. Make sure the utensil does not touch the interior walls during cooking.

Use these utensils for safe microwave cooking and reheating:

- glass ceramic (Pyroceram®), such as Corningware®.
- heat-resistant glass (Pyrex®)
- microwave-safe plastics
- paper plates
- microwave-safe pottery, stoneware and porcelain
- browning dish (Do not exceed recommended preheating time. Follow manufacturer's directions.)
- Dark color cookware may help to optimize cooking performance.

These items can be used for short time reheating of foods that have little fat or sugar in them:

- wood, straw, wicker

DO NOT USE

- metal pans and bakeware
- dishes with metallic trim
- non-heat-resistant glass
- non-microwave-safe plastics (margarine tubs)
- recycled paper products
- brown paper bags
- food storage bags
- metal twist-ties

Should you wish to check if a dish is safe for microwaving, place the empty dish in the microwave oven and microwave on HIGH for 30 seconds. A dish which becomes very hot should not be used.

The following coverings are ideal:

- Paper towels are good for covering foods for reheating and absorbing fat while cooking bacon.
- Wax paper can be used for cooking and reheating.
- Plastic wrap that is specially marked for microwave use can be used for cooking and reheating. DO NOT allow plastic wrap to touch food. Vent so steam can escape.
- Lids that are microwave-safe are a good choice because heat is kept near the food to hasten cooking.
- Microwave oven cooking bags are good for large meats or foods that need tenderizing. DO NOT use metal twist ties. Remember to slit bag so steam can escape.

How to use aluminum foil in your microwave oven:

- Small flat pieces of aluminum foil placed smoothly on the food can be used to shield areas that are either defrosting or cooking too quickly.
- Foil should not come closer than one inch to any surface of the microwave oven.

Should you have questions about utensils or coverings, check a good microwave cookbook or follow recipe suggestions.

ACCESSORIES There are many microwave accessories available for purchase. Evaluate carefully before you purchase so that they meet your needs. A microwave-safe thermometer will assist you in determining correct doneness and assure you that foods have been cooked to safe temperatures. Electrolux is not responsible for any damage to the microwave oven when accessories are used.

ABOUT CHILDREN AND THE MICROWAVE

Children below the age of 7 should use the microwave oven with a supervising person very near to them. Between the ages of 7 and 12, the supervising person should be in the same room.

As with any appliance, close supervision by an adult is necessary when used by children.

At no time should anyone be allowed to lean or swing on the microwave oven door.

Children should be taught all safety caution: use potholders, remove coverings carefully, pay special attention to packages that crisp food because they may be extra hot.

Don't assume that because a child has mastered one cooking skill he/she can cook everything.

Children need to learn that the microwave oven is not a toy. See Child Lock feature.

NOTE

Do not cook whole, stuffed poultry. Cook stuffing separately to 165°F.

To test for doneness, insert a meat thermometer in a thick or dense area away from fat or bone. NEVER leave the thermometer in the food during cooking, unless it is approved for microwave oven use.

- ALWAYS use potholders to prevent burns when handling utensils that are in contact with hot food. Enough heat from the food can transfer through utensils to cause skin burns.
- Avoid steam burns by directing steam away from the face and hands. Slowly lift the farthest edge of a dish's covering and carefully open popcorn and oven cooking bags away from the face.
- Stay near the microwave oven while it's in use and check cooking progress frequently so that there is no chance of overcooking food.
- NEVER use the cavity for storing cookbooks or other items.
- Select, store and handle food carefully to preserve its high quality and minimize the spread of foodborne bacteria.
- Keep waveguide cover clean. Food residue can cause arcing and/or fires.
- Use care when removing items from the microwave oven so that the utensil, your clothes or accessories do not touch the safety door latches.
- Keep aluminum foil used for shielding at least 1 inch away from walls, ceiling and door.

PART NAMES

FRONT VIEW

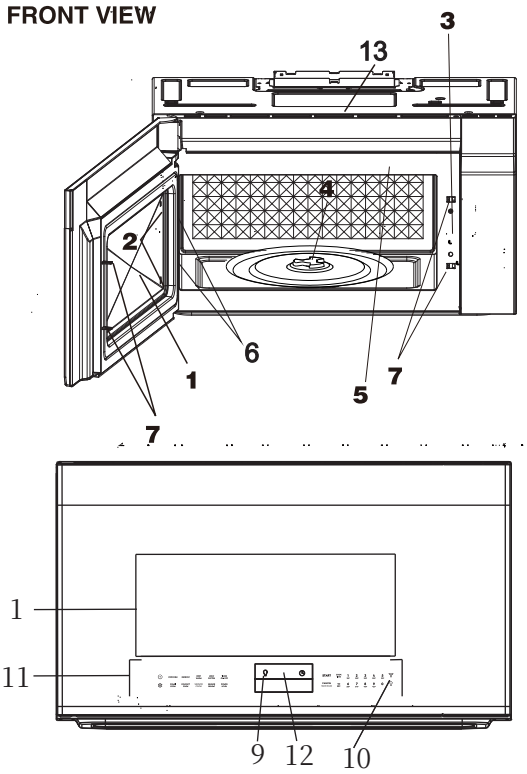

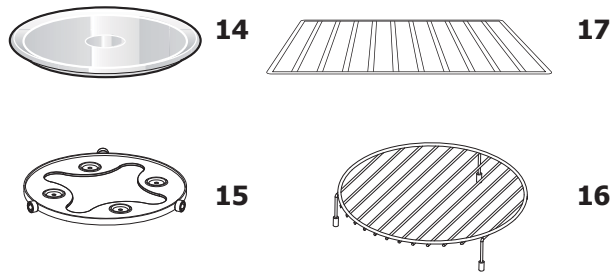

BOTTOM VIEW

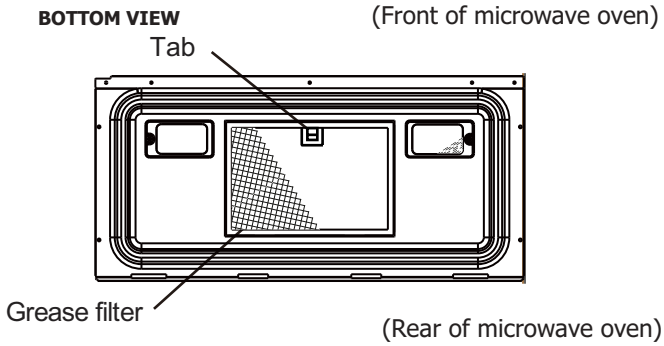

1 Microwave oven door with see-through window

2 Door hinges

3 Waveguide cover:
DO NOT REMOVE.

4 Turntable motor shaft

5 Microwave oven light
It will light when microwave oven is operating or door is open.

6 Metal rack holders

7 Safety door latches
The microwave oven will not operate unless the door is securely closed.

8 Pocket handle

9 Light hi lo pad
Press light once for high, twice for low, three times for light off.

10 Vent high/med/low/off pad
Press once

11 Auto-Touch control panel

12 Time display: Digital display, 99 minutes, 99 seconds

13 Ventilation openings

14 Removable turntable glass
Position glass tray on turntable motor shaft coupling.

15 Removable turntable support
Install the turntable support on the microwave oven bottom, centering the turntable support around the turntable coupling. Then place the turntable glass tray unto the turntable motor coupling.

16 Low wire rack
Use for convection andcombination cooking.
Place on glass turntable tray for proper operation.

17 Wire metal tray for cooking multiple levels of food.

Accessories

The accessory 16 is designed especially for use in the microwave oven for convection, mix or broil cooking. DO NOT USE FOR MICROWAVE ONLY COOKING. Do not substitute similar types of racks for these specially designed ones.
High wire rack (Baking rack)–for convection and fast bake.

- Place on the turntable and use for roasting or broiling to allow juices to drain away from food.

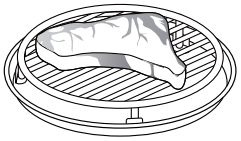

Number next to the control panel illustration
indicates pages on which there are feature descriptions and usage information.

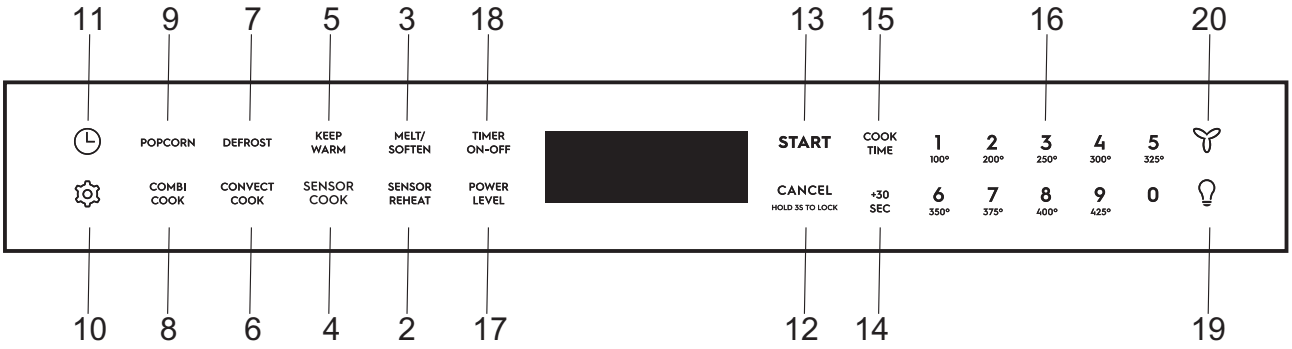

Words in the lower portion of the display will light to indicate what function is in progress.

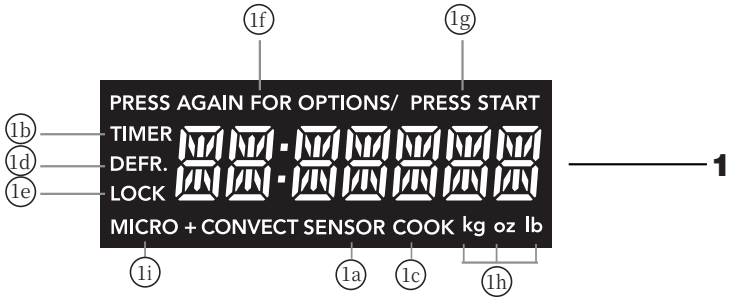

(1) **Display:**
The display includes a clock and indicators that show the time of day, cooking time settings, cook powers, sensor, quantities, weights and cooking functions selected.

1a. SENSOR:
Icon displayed when using sensor cook.

1b. TIMER:
Icon displayed when timer is being set or running.

1c. COOK:
Icon displayed when starting microwave cooking.

1d. DEFR:
Icon displayed when defrosting food.

1e. LOCK:
Icon displayed in control lock.

1f. PRESS AGAIN FOR OPTIONS:
Icon displayed when additional options are available.

1g. PRESS START:
Icon displayed when a valid function can be started.

1h. kg, oz, lb:
Icon displayed when choosing the weight.

1i. CONVECT:
Icon displayed when choosing convect.

(2) **Sensor Reheat**
(3) **Melt/Soften**
(4) **Sensor Cook**
(5) **Keep Warm**
(6) **Convect Cook**
(7) **Defrost**
(8) **Combi cook**
(9) **Popcorn**
(10) **Microwave Settings**
(11) **Clock Settings**
(12) CANCEL HOLD 3S TO LOCK
(13) START
(14) +30 Sec
(15) **Cook Time**
(16) **Convection Cook / Number**
(17) **Power Level**
(18) Timer On-Off
(19) **Bottom light**
(20) **Vent Fan**

BEFORE OPERATING

Setting the clock

1. Press ◷ to set clock.
2. Press numeric key to enter time.
3. Press **START** to confirm.

Setting the timer

1. Press **Timer On-Off** , and then press numeric key to enter timer, the maximum time can be 99 minutes 99 seconds.
2. After timer is set, press **Timer On-Off** , countdown starts.
3. During setting Timer, press **Cancel** **Hold 3s to lock** to quit setting.

MANUAL COOKING

Microwave cooking

1. Press **Cook Time** to enter cook time, e.g. to set microwave 5min, enter 5, 0, 0.
2. Press **Power Level** to set cook power level, LED displays default power “PL-HI”.
3. Press **Power Level** to select corresponding power level, there are 10 levels.
4. Press **START** .

PRESS POWER LEVEL PAD NUMBER OF TIMES FOR DESIRED POWER	APPROXIMATE PERCENTAGE OF POWER	COMMON WORDS FOR POWER LEVELS
POWER LEVEL x 1	100%	High
POWER LEVEL x 2	90%	
POWER LEVEL x 3	80%	
POWER LEVEL x 4	70%	Medium High
POWER LEVEL x 5	60%	
POWER LEVEL x 6	50%	Medium
POWER LEVEL x 7	40%	
POWER LEVEL x 8	30%	Med Low/Defrost
POWER LEVEL x 9	20%	
POWER LEVEL x 10	10%	Low
POWER LEVEL x 11	0%	

Popcorn

The Popcorn quick touch pad lets you pop 3.3, 3.0, 1.75 ounce bags of commercially packaged microwave popcorn. Pop only one package at a time. If you are using a microwave popcorn popper, follow manufacturer's instructions.

- Suppose you want to pop a 3.3 oz. popcorn.

Touch:	Display Shows:
1. Popcorn	PRESS AGAIN FOR OPTIONS/ PRESS START 3.3 oz
2. START	POPCORN COOK Time counting down

Amount	Press popcorn pad
3.30 oz.	once
3.00 oz.	2 times
1.75 oz.	3 times

NOTES

1.Remove the metal shelf from microwave oven when cooking popcorn. Do not use regular paper bags. Do not re-pop unpopped kernals. Do not pop popcorn in glass cookware.

Setting Melt/Soften

The oven uses low power to melt and soften items. See the following table.

- Suppose you want to melt 2 sticks of Butter.

Touch:	Display Shows:
1. Melt/ Soften	PRESS AGAIN FOR OPTIONS/ PRESS START MELT BUTTER
2. START	ENTER 1-2 STK
3. 2	PRESS START 2 STICK
4. START	MELT BUTTER COOK Time counting down

MELT TABLE

CATEGORY	AMOUNT	DIRECTION
BUTTER	1 or 2 sticks	Unwrap and place in microwavable container. No need to cover butter. Stir at the end of cooking to complete melting.
CHOCOLATE	2, 4 or 8 oz.	Chocolate chips or squares of baking chocolate may be used. Unwrap squares and place in microwavable container. Stir at the end of cycle to complete melting.
ICE CREAM	Pint, 1.5 Quart.	Place container in oven. Ice cream will be soft enough to make scooping easier.
CREAM CHEESE	3 or 8 oz.	Unwrap and place in microwavable container. Cream cheese will be at room temperature and ready for use in recipe.

SENSOR COOKING

Sensor cooking has an electronic controlled sensor that detects the vapor (moisture and humidity) emitted from the food as it heats. The sensor adjusts the cooking times and power level for various foods and quantities automatically.

Using Sensor Settings:

1. Be sure the exterior of the cooking container and the interior of the oven are dry. Wipe off any moisture with a dry cloth or paper towel.
2. The oven works with foods at normal storage temperature. For example, popcorn would be at room temperature.
3. More or less food than the quantity listed in the chart should be cooked following the guidelines in any microwave cookbook.
4. During the first part of SENSOR COOKING, food name will appear in the display. Do not open the oven door or press the STOP Cancel Hold 3s to lock pad during this part of the cycle. The measurement of vapor will be interrupted.
   When the sensor detects the vapor emitted from the food, remainder of cooking time will appear. Door may be opened when remaining cooking time appears in the display. At this time, you may stir or season food, as desired.
5. If the sensor does not detect vapor properly when popping popcorn, the oven will turn off, and the correct time of day will be displayed. If the sensor does not detect vapor properly when cooking other foods, AN ERROR CODE will be displayed, and the oven will turn off.
6. Check food for temperature after cooking. If additional time is needed, continue to cook manually.

Covering Foods:

Some foods cook better when covered.

1. Casserole lid.
2. Plastic wrap: Use plastic wrap recommended for microwave cooking. Cover dish loosely; allow approximately 1/2 inch to remain uncovered to allow steam to escape. Plastic wrap should not touch food.
3. Wax paper: Cover dish completely; fold excess wrap under dish to secure. If dish is wider than paper, overlap two pieces at least one inch to cover.

Be careful when removing any covering to allow steam to escape away from you.

NOTES for SENSOR COOKING

1. The final cooking result will vary according to the food condition (e.g. initial temperature, shape, quality). Check food for temperature after cooking. If additional time is needed, continue to cook manually.
2. Stay near the oven while it's in use and check cooking progress frequently so that there is no chance of overcooking food.
3. When SENSOR COOKING is selected Turntable On is automatically set for optimum cooking.

Sensor Cook

You can cook foods by pressing the **sensor cook** pad multiple times. You don't need to calculate cooking time or power level.

- Suppose you want to cook fresh veggies .

Touch:	Display Shows:
1. Sensor Cook x1	PRESS AGAIN FOR OPTIONS/ PRESS START BACON SENSOR
2. Sensor Cook x2	PRESS AGAIN FOR OPTIONS/ PRESS START POTATO SENSOR
3. Sensor Cook x3	PRESS AGAIN FOR OPTIONS/ PRESS START FROZEN DINNER SENSOR
4. Sensor Cook x4	PRESS AGAIN FOR OPTIONS/ PRESS START RICE SENSOR
5. Sensor Cook x5	PRESS AGAIN FOR OPTIONS/ PRESS START FROZEN BREAKFAST SENSOR
6. Sensor Cook x6	PRESS AGAIN FOR OPTIONS/ PRESS START FRESH VEGGIES SENSOR COOK
7. START	FRESH VEGGIES SENSOR COOK

Sensor Reheat

- Suppose you want to reheat rolls with sensor reheat.

Touch:	Display Shows:
1. Sensor Reheat x1	PRESS AGAIN FOR OPTIONS/ PRESS START BEVERAGE SENSOR
2. Sensor Reheat x2	PRESS AGAIN FOR OPTIONS/ PRESS START SOUP SAUCE SENSOR
3. Sensor Reheat x3	PRESS AGAIN FOR OPTIONS/ PRESS START PIZZA SENSOR
4. Sensor Reheat x4	PRESS AGAIN FOR OPTIONS/ PRESS START DINNER PLATE SENSOR
5. Sensor Reheat x5	PRESS AGAIN FOR OPTIONS/ PRESS START CASSEROLE SENSOR
6. Sensor Reheat x6	PRESS AGAIN FOR OPTIONS/ PRESS START ROLLS SENSOR
7. START	ROLLS SENSOR cook

Sensor Cook chart

FOOD	AMOUNT
1.Bacon	1-3 slices
2.Potato	1-4 pcs
3. Frozen Dinner	10 oz./ 20 oz.
4. Rice	1-2 cups Use medium or long grain rice. Cook instant rice according to directions on the package.
5. Frozen Breakfast	8-12 oz.
6. Fresh Veggies	1-4 cups.
7. Frozen Veggies	1-4 cups.

Sensor Reheat chart

FOOD	AMOUNT
Beverage	1 - 2 cups
Soup/Sauce	1-2 Cups
Pizza	1-4 Pieces
Dinner Plate	1 Plate
Casserole/ Lasagna	1 Serving
Roll/ Muffin	1-3 Pieces

CONVECTION COOKING

Convection Cooking

There are 9 temperatures of convection:100F,200F, 250F, 300F,325F,350F,375F, 400F,425F .

Convection cooking uses a heating element to raise the temperature of the air inside the oven. Any oven temperature from 100°F to 425°F may be set. A fan gently circulates this heated air throughout the oven, over and around the food, producing golden brown exteriors and rich, moist interiors.

Because the heated air is kept constantly moving, not permitting a layer of cooler air to develop around the food, some foods cook faster than in regular oven cooking.

For Best Results…

Always use the round wire rack when convection cooking. Reduce package/recipe temperature 25°F for baked goods. The round wire rack is required for good air circulation and even browning.

See the Cookware Tips section **(P17)** *for information on suggested cookware.*

Using convection with preheating

- Suppose you want to cook food for 5 minutes at 400ºF using convection with preheating

Touch:	Display Shows:
1. convect cook	PRESS AGAIN FOR OPTIONS/ PRESS START PREHEAT ENTER TEMP
2. 8	PRESS START 400F
3. START	PREHEAT CONVECT
(The oven is preheated, it will signal.)	
4. When preheated temp. reached. If no action taken in 12 seconds, preheated temp. display.	400F CONVECT
5. Open the door in 30 minutes.	ENTER TIME
6. 5 0 0 325°	
Place the food in the oven. Press the number keys to set cooking time	PRESS START 5:00
7. START	Time counting down convect cook

Using convection without preheating

- Suppose you want to cook food for 5 minutes at 400ºF using convection without preheating

Touch:	Display Shows:
1. convect cook x2	PRESS AGAIN FOR OPTIONS/ BAKE ROAST ENTER TEMP
2. 8	PRESS START 400F
3. START	ENTER TIME
4. 5 0 0 325°	PRESS START 5:00
5. START (If the door closed)	Time counting down

Microwave + Convection Combination Cooking

- Suppose you want to cook food for 5 minutes using combination cooking.

Touch:	Display Shows:
1. Combi cook x1	PRESS AGAIN FOR OPTIONS/ PRESS START BAKE 325F
2. Combi cook x2	PRESS AGAIN FOR OPTIONS/ PRESS START ROAST 300F
3. 8	PRESS START 400F
4. START	ENTER TIME
5. 5 0 0 325°	PRESS START 5:00
6. START	Time counting down micro+convect cook

NOTE

If convection cycle is stopped or at end of convection cycle the vent fan will run and shut off automatically.

Convection Cooking

- Use the round wire rack during convection baking.
- Always pre-heat the oven before convection baking.
- Avoid opening the oven door during cooking – each time the door is opened the oven loses heat and this can cause uneven baking.

Biscuits and bread

TYPE	TEMPERATURE	TIME	NOTES
Biscuits	400°F	20-30 minutes	Canned refrigerated biscuits take 2 to 4 minutes less time.
Muffins	350°F	15-20 minutes	Remove from tin straight away and place on cooling rack.
Nut bread or fruit bread	350°F	55-70 minutes	
Bread	350°F	55-65 minutes	
Plain or sweet rolls	350°F	40-50 minutes	Lightly grease baking sheet.

Cakes

TYPE	TEMPERATURE	TIME	NOTES
Cheesecake	350°F	65-75 minutes	After baking open oven door slightly and leave cheesecake to stand in oven for 30 minutes
Coffee cake	350°F	30-40 minutes	
Cup cakes	350°F	20-30 minutes	
Fruit cake	300°F	85-95 minutes	
Gingerbread	350°F	40-45 minutes	

Combination Cooking

Combination cooking helps to brown and crisp foods.

TYPE	QUANTITY	TIME	NOTES
Beefburgers	4oz	16-19 minutes for two	Place on microwave-proof plate, drain fat and turn halfway through cooking.
Beef rump roast	1.0kg	Rare: 15-20 minutes Medium: 21-25 minutes Well done: 26-30 minutes	Place fat side down on low rack, season, shield if necessary After cooking, leave to stand for 15 minutes.
Lamb roast, rolled, boneless	1.0kg	Rare: 15-20 minutes Medium: 21-25 minutes Well done: 26-30 minutes	Place fat side down on low rack, brush with marinade and season, shield if necessary. After cooking, leave to stand for 15 minutes.
Pork	2 chops	Rare: 13-17 minutes Medium: 18-23 minutes Well done: 24-29 minutes	Place on high rack, brush with marinade and season. Cook until no longer pink or internal temperature reaches 170°F. Turn halfway through cooking. After cooking, cover with foil and leave to stand for 5 minutes.
Pork	4 chops	Rare: 15-19 minutes Medium: 20-25 minutes Well done: 26-32 minutes	Place on high rack, brush with marinade and season. Cook until no longer pink or internal temperature reaches 170°F. Turn halfway through cooking. After cooking, cover with foil and leave to stand for 5 minutes.
Pork loin roast, rolled, boneless	1.0kg	Rare: 20-25 minutes Medium: 26-30 minutes Well done: 30-35 minutes	Place fat side down on low rack, season, shield if necessary. After cooking, cover with foil and leave to stand for 15 minutes.
Chicken breasts	1 lb.	16-26 minutes	Wash and dry meat, remove skin, place thickest portion to outside on high rack.
Chicken boneless portions	1 lb.	13-24 minutes	Place on high rack, brush with butter and season as required. Turn halfway through cooking. Cook until no longer pink and juices run clear. After cooking, cover with foil and leave to stand for 3-5 minutes.
Chicken, whole	1.3kg	25-40 minutes	Wash and dry bird, place breast down on low rack, brush with butter and season as required. Turn and drain halfway through cooking. Cook until no longer pink and juices run clear. After cooking, cover with foil and leave to stand for 10 minutes. Temperature in thigh should be approx 185°F.

Cookware Tips

Convection Cooking

Metal Pans are recommended for all types of baked products,but especially where browning or crusting is important.

Dark or dull finish metal pans are best for breads and pies because they absorb heat and produce crisper crust.

Shiny aluminum pans are better for cakes, cookies or muffins because these pans reflect heat and help produce a light tender crust.

Glass or Glass-Ceramic casserole or baking dishes are best suited for egg and cheese recipes due to the cleanability of glass.

Combination Cooking

Glass or Glass-Ceramic baking containers are recommended.Be sure not to use items with metal trim as it may cause arcing (sparking) with oven wall or oven shelf, damaging the cookware, the shelf or the oven.

Heat-Resistant Plastic microwave cookware (safe to 425°F) may be used, but it is not recommended for foods requiring crusting or all-around browning, because the plastic is a poor conductor of heat.

COOKWARE	*MICROWAVE*	*CONVECTION*	*COMBINATION*
Heat-Resistant Glass, Glass-Ceramic (Pyrex®, Fire King®, Corning Ware®, etc.)	Yes	Yes	Yes
Metal	No	Yes	No
Non Heat-Resistant Glass	No	No	No
Microwave-Safe Plastics	Yes	No	Yes
Plastic Films and Wraps	Yes	No	No
Paper Products	Yes	No	No
Straw, Wicker and Wood	Yes	No	No

*Use only microwave cookware that is safe to 425 °F.

AUTO DEFROST

Using Auto Defrost

The auto defrost feature provides you with the best defrosting method for frozen foods. The cooking guide will show you which defrost sequence is recommended for the food you are defrosting.

For added convenience, the Auto Defrost includes a built-in beep mechanism that reminds you to check, turn over, separate, or rearrange the food in order to get the best defrost results. Three different defrosting levels are provided:

1. **MEAT**
2. **POULTRY**
3. **FISH**

Available weight is 0.1-6.0 lbs

- Suppose you want to defrost 1.2 lbs of fish.

Touch:	Display Shows:
1. Defrost X1	PRESS AGAIN FOR OPTIONS/ PRESS START MEAT
2. Defrost X2	PRESS AGAIN FOR OPTIONS/ PRESS START POULTRY
3. Defrost X3	PRESS AGAIN FOR OPTIONS/ PRESS START FISH
4. START	ENTER WEIGHT lb
5. (1) and (2) To enter weight	PRESS START 1.2 lb
6. START	DEFR. FISH cook Time counting down

NOTES

The oven will beep during the DEFROST cycle. At this time, open the door and turn, separate, or rearrange the food. Remove any portions that have thawed. Return frozen portions to the oven and touch START to resume the defrost cycle.

Operating Tips

- For best results, remove fish, shell fish, meat and poultry from its original closed paper or plastic package (wrapper). Otherwise, the wrap will hold steam and juice close to the foods, which can cause the outer surface of the foods to cook.
- For best results, roll your ground meat into a ball before freezing. During the DEFROST cycle, the microwave will signal when it is time to turn the meat over. Scrape off any excess frost from the meat and continue defrosting.
- Place foods in a shallow container or on a microwave roasting rack to catch drippings.

This table shows food type selections and the weights you can set for each type. For best results, loosen or remove covering on food.

KEY PRESS	Category	WEIGHTS YOU CAN SET (tenths of a pound)
Defrost x 1	Meat	0.1 to 6.0
Defrost x 2	Poultry	0.1 to 6.0
Defrost x 3	Fish	0.1 to 6.0

Weight conversion table

You are probably used to measuring food in pounds and ounces that are fractions of a pound (for example, 4 ounces equals 1/4 pound). However, in order to enter food weight in Auto Defrost, you must specify pounds and tenths of a pound.

If the weight on the food package is in fractions of a pound, you can use the following table to convert the weight to decimals.

Equivalent Weight	
OUNCES	**DECIMAL WEIGHT**
1.6	.10
3.2	.20
4.0	.25 One-Quarter Pound
4.8	.30
6.4	.40
8.0	.50 One-Half Pound
9.6	.60
11.2	.70
12.0	.75 Three-Quarters Pound
12.8	.80
14.4	.90
16.0	1.0 One Pound

NOTES

If between two decimal weights, choose the lower weight for the best defrosting results.

(1) Using Vent Fan

a) In standby or microwave working mode, press to activate High speed, LED display HIGH, Press again to select MED, LOW and OFF.

b) The microwave oven will go back to standby mode or previous mode if there're no operation within 2 seconds.

Touch:	Display Shows:
1.	HIGH
2.	MED
3.	LOW
4.	OFF

(2) Setting Volume

Touch:	Display Shows:
X1	PRESS AGAIN FOR OPTIONS/ PRESS START VOLUME LOW PRESS AGAIN FOR OPTIONS/ PRESS START VOLUME MED PRESS AGAIN FOR OPTIONS/ PRESS START VOLUME HIGH PRESS AGAIN FOR OPTIONS/ PRESS START VOLUME OFF
START	OFF

(3) Setting Language

Touch:	Display Shows:
X4	PRESS AGAIN FOR OPTIONS/ PRESS START LANGUAGE FRENCH
START	FRANCAIS
X4	PRESS AGAIN FOR OPTIONS/ PRESS START LANGAGE ANGLAIS
START	ENGLISH

(4) Setting Turntable ON/OFF

Touch:	Display Shows:
X2	PRESS AGAIN FOR OPTIONS/ PRESS START TURN TABLE ON
START	TT OFF
X2	PRESS AGAIN FOR OPTIONS/ PRESS START TURN TABLE OFF
START	TT ON

(5) Setting Weight Lb/KG

Touch:	Display Shows:
X3	PRESS AGAIN FOR OPTIONS/ PRESS START Lb /KG
START	KG Kg

(6) Setting Clock display

Touch:	Display Shows:
X5	PRESS AGAIN FOR OPTIONS/ PRESS START CLOCK DISPLAY ON
START	OFF
X5	PRESS AGAIN FOR OPTIONS/ PRESS START CLOCK DISPLAY OFF
START	ON

(7) Setting DEMO

Touch:	Display Shows:
X6	PRESS AGAIN FOR OPTIONS/ PRESS START DEMO OFF
START	ON

NOTES

demo mode microwave and convection heater will not heat

(8) Bottom light

Touch	Display Shows:
X1	HIGH
X2	LOW
X3	OFF

(9) KEEP WARM

Touch	Display Shows:
Keep Warm	PRESS START ENTER TIME
1 0 0 0	PRESS START 10:00
START	10:00 CONVECT COOK

(10) Using Add 30 Sec.

Suppose you want to cook for one minute.

Touch	Display Shows:
+30 Sec X2	PRESS START :30 COOK
START	1:00 COOK Time counting down

(11) Multi Stage Cooking

Stage one 5:00 PL-HI, stage two 3:00 PL-80

Touch	Display Shows:
Cook Time	ENTER TIME
5 0 0	PRESS START 5:00
Power Level	PRESS START PL-HI
Cook Time	ENTER TIME
3 0 0	PRESS START 3:00
Power Level X3	PRESS START PL-80
START	5:00 COOK

(12) Lock-out function for children

Lock: In waiting state, press Cancel Hold 3s to lock, there will be "beep" twice denoting entering into the children-lock state and lock indicator will light, screen will display current time .

Un-lock: In lock state, press Cancel Hold 3s to lock, there will be "beep" twice denoting that the lock is released, and the lock indicator will disappear.

(13)Using Ready Set

Microwave heating or cooking may be quickly set at 100% power level from 1 to 9 minutes. Use the number keys 1-9 to choose the desired minutes of cook time (this option will only work using the 1 to 9 numeric pads):

Example: to quickly heat for 2 minutes at 100% power:

Touch number pads 1-9 for desired minutes of cook time. 2

Note: the **Ready Set** function cannot be set when using the **Defrost** (by weight) feature.

NOTE

"Food" will be displayed if a quick start cooking cycle key is not selected within 5 minutes of placing food in the microwave. You must open then close the door again to clear "Food" from the display.

WARNING

Disconnect the power cord before cleaning or leave the door open to deactivate the oven during cleaning.

EXTERIOR

The outside surface is precoated steel and plastic. Clean the outside with mild soap and water; rinse and dry with a soft cloth. Do not use any type of household or abrasive cleaner.

DOOR

Disconnect the power cord or deactivate the oven with setting Child Lock before cleaning to prevent unexpected manipulation.
Wipe the window on both sides with a soft cloth to remove any spills or spatters. Metal parts will be easier to maintain if wiped frequently with a soft cloth. Avoid the use of spray and other harsh cleaners as they may stain, streak or dull the door surface.

EASY CARE™ STAINLESS STEEL (SOME MODELS)

Your microwave oven finish may be made with Easy Care™ Stainless Steel (some models). Clean the stainless with warm soapy water using a clean sponge or cloth. Rinse with clean water and dry with a soft clean cloth. DO NOT use ANY store bought cleaners like Stainless Steel cleaners or any other types of cleaners containing any abrasive, chlorides, chlorines or ammonia. It is recommended to use mild dish soap and water or a 50/50 solution of water and vinegar.

INTERIOR

Cleaning is easy because little heat is generated to the interior surfaces; therefore, there is no baking and setting of spills or spattering. To clean the interior surfaces, wipe with a soft cloth and warm water. DO NOT USE ABRASIVE OR HARSH CLEANERS OR SCOURING PADS. For heavier soil, use baking soda or a mild soap; rinse thoroughly with hot water. The rack can be cleaned with hot soapy water, rinsed and dried.

WAVEGUIDE COVER

The waveguide cover is located on the ceiling in the microwave oven cavity. It is made from mica so requires special care. Keep the waveguide cover clean to assure good microwave oven performance. Carefully wipe with a damp cloth any food spatters from the surface of the cover immediately after they occur. Built-up splashes may overheat and cause smoke or possibly catch fire. DO NOT REMOVE THE WAVEGUIDE COVER.

ODOR REMOVAL

Occasionally, a cooking odor may remain in the microwave oven. To remove, combine 1 cup water, grated peel and juice of 1 lemon and several whole cloves in a 2-cup glass measuring cup. Boil for several minutes using 100% power. Allow to set in microwave oven until cool. Wipe interior with a soft cloth.

TURNTABLE/TURNTABLE SUPPORT

The turntable and turntable support can be removed for easy cleaning. Wash them in mild, sudsy water; for stubborn stains use a mild cleanser and non-abrasive scouring sponge. They are also dishwasher-proof. Use upper rack of dishwasher. The turntable motor shaft is not sealed, so excess water or spills should be wiped up immediately.

CAUTION

GREASE FILTER

Filter should be cleaned at least once a month. Never operate the fan or microwave oven without the filter in place.

1. Pull down slightly on the tab toward the front of the microwave oven and remove the filter.
2. Soak the filter in a sink or dish pan filled with hot water and detergent. DO NOT use ammonia or other alkali; they will react with the filter material and darken it.
3. Agitate and scrub with a brush to remove embedded dirt.
4. Rinse thoroughly and shake dry.
5. Replace by fitting the filter back into the opening.

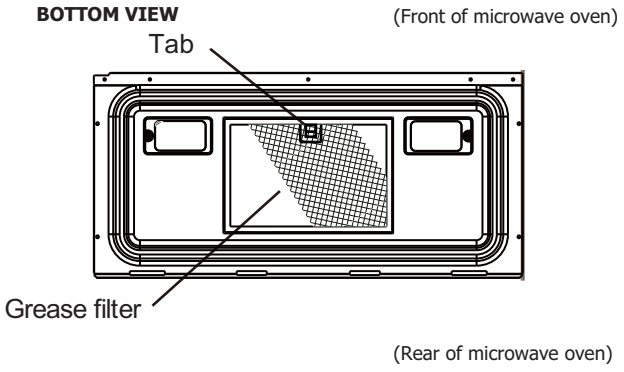

CLEANING AND CARE

WARNING

Disconnect the power cord before cleaning or leave the door open to deactivate the oven during cleaning.

CLEANING THE GREASE FILTER

The oven ventilation grease filter should be removed and cleaned often; generally at least once every month.

CAUTION

To avoid risk of personal injury or property damage, do not operate oven hood without filter properly in place.

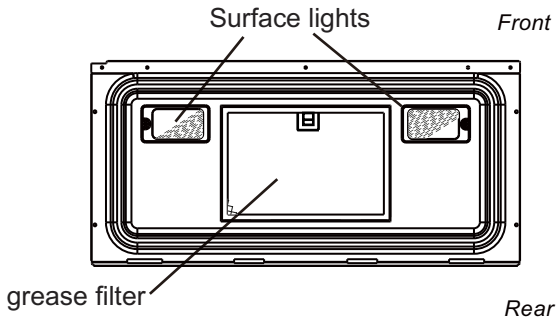

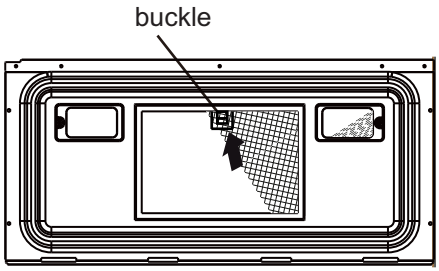

1. To remove the grease filter, pull the lever, then pull filter downward . The filter will drop out .

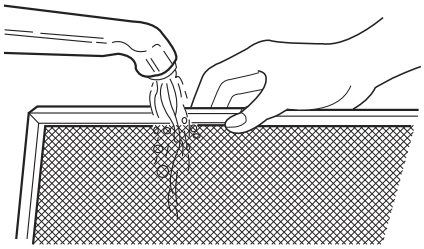

2. Soak the grease filter in hot water using a mild detergent. Rinse well and shake to dry. or wash grease filter in dishwasher. It is best to place in upper rack of dishwasher for cleaning.

NOTE

Do not use ammonia cleaner. The ammonia cleaner may corrode and darken the aluminum on the filter.

3. To reinstall the grease filter, infix the hooks into the holes of base plate, then pull the lever and toward oven to lock.

Surface light replacement

CAUTION

To avoid risk of personal injury or property damage, wear gloves when replacing the light bulbs.

1. Unplug the microwave oven or turn off power at the main circuit breaker.
2. Remove the bulb cover mounting screws at light positions under the microwave.

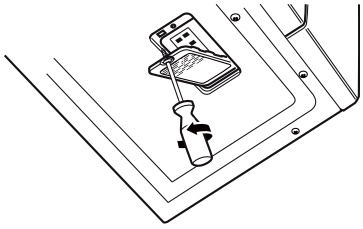

3. Replace with 1.5w LED bulb, the part number is 5304499540.

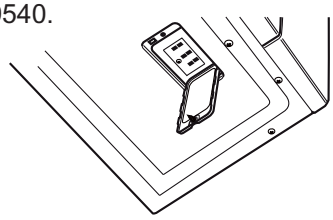

4. Re-install bulb cover and mounting screw.
5. Plug the microwave back into the power supply or turn the power back on at the main circuit breaker.

WARNING

Disconnect the power cord before cleaning or leave the door open to deactivate the oven during cleaning.

CHARCOAL FILTER REPLACEMENT

Charcoal Filter installed in your microwave oven, is used for non vented, recirculated installation. The filter should be changed every 6 to 12 months depending on use.

1. Disconnect power to the microwave oven at the circuit breaker panel or by unplugging.
2. Remove the vent grill mounting screws.
3. Pull the vent grill away from the unit.

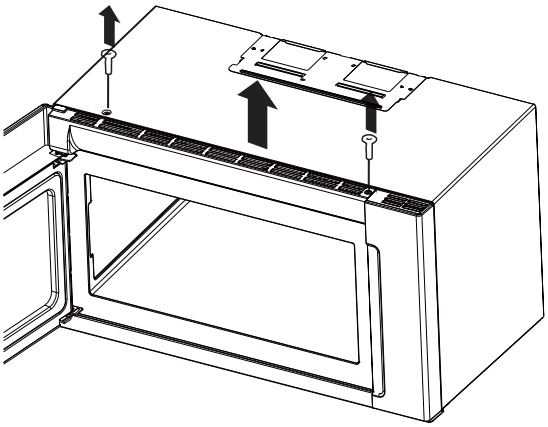

4. Remove the charcoal filter and replace with part number 5304488379.

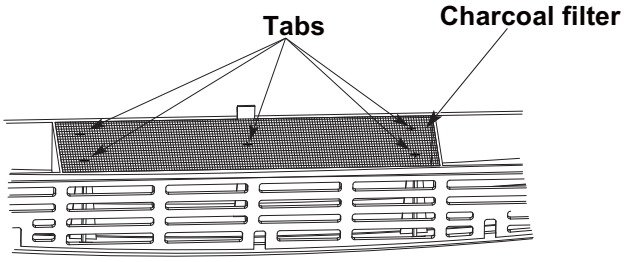

5.Put the vent grill back on unit.

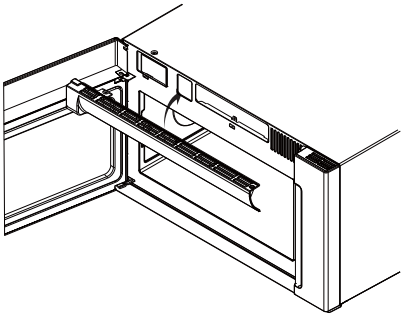

OVEN LIGHT REPLACEMENT

Remove the vent grill per charcoal filter replacement instructions.

1. Open light cover by carefully loosing the screw on the front edge.

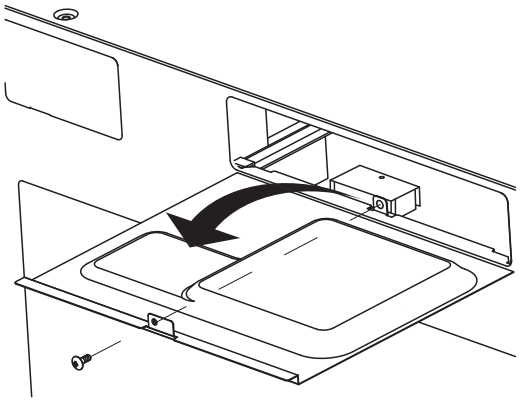

2. Remove burnt out light bulb and replace only with an equivalent 1.5 watt LED bulb available from parts distributor, the part number is 5304499540.

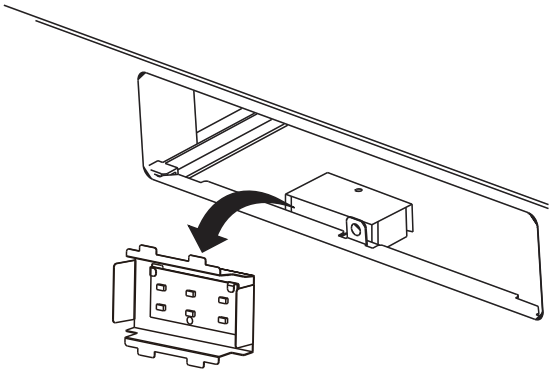

CAUTION

Note: DO NOT USE LED BULB LARGER THAN 1.5 WATT.

3. Replace the microwave oven light cover by carefully pushing into place. Replace the charcoal filter. Push the vent grill back into place (engaging both the bottom and top tabs) and replace the vent grill mouting screws.

SERVICE CALL CHECK

Please check the following before calling for service:

Place one cup of water in a glass measuring cup in the microwave oven and close the door securely. Operate the microwave oven for one minute at HIGH 100%.

A	Does the microwave oven light come on?	YES ____	NO ____
B	Does the cooling fan work? (Put your hand at top above Display.)	YES ____	NO ____
C	Does the turntable rotate? (It is normal for the turntable to turn in either direction.)	YES ____	NO ____
D	Is the water in the microwave oven warm?	YES ____	NO ____

If "NO" is the answer to any of the above questions, please check electrical outlet, fuse and/or circuit breaker. If they are functioning properly, CONTACT YOUR NEAREST ELECTROLUX AUTHORIZED SERVICER.

A microwave oven should never be serviced by a "do-it-yourself" repair person.

NOTES

1. If time appearing in the display is counting down very rapidly, check Demonstration Mode in the CONVENIENT FEATURES section to make sure DEMO Mode is OFF.
2. If the oven is set for more than 30 minutes at, 100 percent power level, after the first 30 minutes the power level will automatically adjust itself to 80 percent power to avoid overcooking.

SPECIFICATIONS

AC Line Voltage:	Single phase 120V, 60Hz, AC only
AC Power Required:	1500 W 13.5 A (for EMOW1911AS)
Output Power*:	900 W
Output Power*(convection):	1350 W
Frequency:	2450 MHz (Class B/Group2)**
Outside Dimensions (including handle):	33.31(W)x20.12(H)x20.95(D)
Cavity Dimensions:	31.06(W)x17.56(H)x16.06(D)
Microwave oven Capacity***:	1.9 Cu.Ft.
Cooking Uniformity:	Turntable
Weight:	Approx. (net) 76.06 lb, (gross) 82.67 lb
Work/Night Light:	2*1.2 W LED
Oven Light:	1*1.2 W LED

* The International Electrotechnical Commission's standardized method for measuring output wattage. This test method is widely recognized.

** This is the classification of ISM (Industrial, Scientific and Medical) equipment described in the International Standard CISPR11.

*** Internal capacity is calculated by measuring maximum width, depth and height. Actual capacity for holding food is less.

In compliance with standards set by:

FCC - Federal Communications Commission Authorized.

DHHS - Complies with Department of Health and Human Services (DHHS) rule, CFR, Title 21, Chapter I, Subchapter J.

- This symbol on the nameplate means the product is listed by Underwriters Laboratories, Inc.

WARRANTY

Your appliance is covered by a one year limited warranty. For one year from your original date of purchase, Electrolux will pay all costs for repairing or replacing any parts of this appliance that prove to be defective in materials or workmanship when such appliance is installed, used and maintained in accordance with the provided instructions.

Exclusions

This warranty does not cover the following:

Products with original serial numbers that have been removed, altered or cannot be readily determined.

Product that has been transferred from its original owner to another party or removed outside the USA or Canada.

Rust on the interior or exterior of the unit.

Products purchased “as-is” are not covered by this warranty.

Food loss due to any refrigerator or freezer failures.

Products used in a commercial setting.

Service calls which do not involve malfunction or defects in materials or workmanship, or for appliances not in ordinary household use or used other than in accordance with the provided instructions.

Service calls to correct the installation of your appliance or to instruct you how to use your appliance.

Expenses for making the appliance accessible for servicing, such as removal of trim, cupboards, shelves, etc., which are not a part of the appliance when it is shipped from the factory.

Service calls to repair or replace appliance light bulbs, air filters, water filters, other consumables, or knobs, handles, or other cosmetic parts.

Surcharges including, but not limited to, any after hour, weekend, or holiday service calls, tolls, ferry trip charges, or mileage expense for service calls to remote areas, including the state of Alaska.

Damages to the finish of appliance or home incurred during installation, including but not limited to floors, cabinets, walls, etc.

Damages caused by: services performed by unauthorized service companies; use of parts other than genuine Electrolux parts or parts obtained from persons other than authorized service companies; or external causes such as abuse, misuse, inadequate power supply, accidents, fires, or acts of God.

DISCLAIMER OF IMPLIED WARRANTIES; LIMITATION OF REMEDIES

CUSTOMER’S SOLE AND EXCLUSIVE REMEDY UNDER THIS LIMITED WARRANTY SHALL BE PRODUCT REPAIR OR REPLACEMENT AS PROVIDED HEREIN. CLAIMS BASED ON IMPLIED WARRANTIES, INCLUDING WARRANTIES OF MERCHANTABILITY OR FITNESS FOR A PARTICULAR PURPOSE, ARE LIMITED TO ONE YEAR OR THE SHORTEST PERIOD ALLOWED BY LAW, BUT NOT LESS THAN ONE YEAR. ELECTROLUX SHALL NOT BE LIABLE FOR CONSEQUENTIAL OR INCIDENTAL DAMAGES SUCH AS PROPERTY DAMAGE AND INCIDENTAL EXPENSES RESULTING FROM ANY BREACH OF THIS WRITTEN LIMITED WARRANTY OR ANY IMPLIED WARRANTY. SOME STATES AND PROVINCES DO NOT ALLOW THE EXCLUSION OR LIMITATION OF INCIDENTAL OR CONSEQUENTIAL DAMAGES, OR LIMITATIONS ON THE DURATION OF IMPLIED WARRANTIES, SO THESE LIMITATIONS OR EXCLUSIONS MAY NOT APPLY TO YOU. THIS WRITTEN WARRANTY GIVES YOU SPECIFIC LEGAL RIGHTS. YOU MAY ALSO HAVE OTHER RIGHTS THAT VARY FROM STATE TO STATE.

If You Need Service

Keep your receipt, delivery slip, or some other appropriate payment record to establish the warranty period should service be required. If service is performed, it is in your best interest to obtain and keep all receipts. Service under this warranty must be obtained by contacting Electrolux at the addresses or phone numbers below.

This warranty only applies in the USA and Canada. In the USA, your appliance is warranted by Electrolux Major Appliances North America, a division of Electrolux Home Products, Inc. In Canada, your appliance is warranted by Electrolux Canada Corp. Electrolux authorizes no person to change or add to any obligations under this warranty. Obligations for service and parts under this warranty must be performed by Electrolux or an authorized service company. Product features or specifications as described or illustrated are subject to change without notice.

USA
1-800-374-4432
Frigidaire
10200 David Taylor Drive
Charlotte, NC 28262

Electrolux

Canada
1.800.265.8352
Electrolux Canada Corp.
5855 Terry Fox Way
Mississauga, Ontario, Canada
L5V 3E4