OVER THE RANGE
MICROWAVE OVEN
OPERATION MANUAL

MODEL

TM153K6SF-P0H

CONTENTS

- For Customer Assistance 2
- Precautions to Avoid Possible Exposure to Excessive Microwave Energy 3
- Consumer Limited Warranty 4
- Important Safety Instructions 5
- Federal Communication Commission Radio Frequency Interference Statement 6
- Grounding Instructions 6
- Installation Guide 7-8
- Specifications 9
- Features Diagram 10-12
- Operation Procedure 13-16
- Controls 17-30
- Care and Cleaning 31-35
- Before You Call 36
- Questions and Answers 37
- Cooking Instructions 38-48

READ ALL INSTRUCTIONS CAREFULLY BEFORE USING THE OVEN.

※ **Keep the waveguide cover clean at all times.**
Wipe the oven interior wth a soft damp cloth after each use.
If you leave grease or fat anywhere in the cavity it may overheat, smoke or even catch fire when next using the oven.

FOR CUSTOMER ASSISTANCE

REGISTER YOUR PRODUCT

Registering your new product is easy and offers benefits that help you get the most out of your Sharp product including:

- ✓ **Convenience**: If you ever need warranty support, your product information is already on file.
- ✓ **Communication**: Stay up to date with important notifications and special offers from SHARP.
- ✓ **Support**: Quickly access support content including Owners Manuals, FAQ's, How-to Videos, and much more.

→ FAQ's and How-To Videos
→ Find or Request Service
→ Purchase an Extended Warranty
→ Downloads including the Installation Guide, Spec Sheet, and Owner's Manual

PRECAUTIONS TO AVOID POSSIBLE EXPOSURE TO EXCESSIVE MICROWAVE ENERGY

(a) Do not attempt to operate this oven with the door open since open-door operation can result in harmful exposure to microwave energy. It is important not to defeat or tamper with the safety interlocks.

(b) Do not place any object between the oven front face and the door or allow soil or cleaner residue to accumulate on sealing surfaces.

(c) Do not operate the oven if it is damaged. It is particularly important that the oven door close properly and that there is no damage to the: (1) door (bent), (2) hinges and latches (broken or loosened), (3) door seals and sealing surfaces.

(d) The oven should not be adjusted or repaired by anyone except properly qualified service personnel.

CONSUMER LIMITED WARRANTY

SHARP ELECTRONICS CORPORATION warrants to the first consumer purchaser that this Sharp brand (the "Product"), when shipped in its original container, will be free from defective workmanship and materials, and agrees that it will, at its option, either repair the defect or replace the defective Product or part thereof with a new or remanufactured equivalent at no charge to the purchaser for parts or labor for the period(s) set forth below.

This warranty does not apply to any appearance items of the Product nor to the additional excluded item(s) set forth below nor to any Product the exterior of which has been damaged or defaced, which has been subjected to improper voltage or other misuse, abnormal service or handling, or which has been altered or modified in design or construction.

In order to enforce the rights under this limited warranty, the purchaser should follow the steps set forth below and provide proof of purchase to the servicer.

The limited warranty described herein is in addition to whatever implied warranties may be granted to purchasers by law. ALL IMPLIED WARRANTIES INCLUDING THE WARRANTIES OF MERCHANTABILITY AND FITNESS FOR USE ARE LIMITED TO THE PERIOD(S) FROM THE DATE OF PURCHASE SET FORTH BELOW. Some states do not allow limitations on how long an implied warranty lasts, so the above limitation may not apply to you.

Neither the sales personnel of the seller nor any other person is authorized to make any warranties other than those described herein, or to extend the duration of any warranties beyond the time period described herein on behalf of Sharp.

The warranties described herein shall be the sole and exclusive warranties granted by Sharp and shall be the sole and exclusive remedy available to the purchaser. Correction of defects, in the manner and for the period of time described herein, shall constitute complete fulfillment of all liabilities and responsibilities of Sharp to the purchaser with respect to the Product, and shall constitute full satisfaction of all claims, whether based on contract, negligence, strict liability or otherwise. In no event shall Sharp be liable, or in any way responsible, for any damages or defects in the Product which were caused by repairs or attempted repairs performed by anyone other than an authorized servicer. Nor shall Sharp be liable or in any way responsible for any incidental or consequential economic or property damage. Some states do not allow the exclusion of incidental or consequential damages, so the above exclusion may not apply to you.

THIS LIMITED WARRANTY IS VALID ONLY IN THE FIFTY (50) UNITED STATES, THE DISTRICT OF COLUMBIA AND PUERTO RICO.

Your Product Model Number & Description:	SMO1969JS Home Use Carousel Microwave Oven. (Be sure to have this information available when you need service for your Product.)
Warranty Period for this Product:	One (1) year parts and labor. The warranty period continues for an additional six (6) years, for a total of seven (7) years, with respect to the magnetron tube in the Product for parts only; labor and service are not provided free of charge for this additional period.
Additional Item(s) Excluded from Warranty Coverage (if any):	Non-functional accessories, turntable and light bulb. Service calls to your home to instruct how to use your appliance.
Where to Obtain Service:	From a Sharp Authorized Servicer located In the United States. Be sure to have Proof of Purchase available. For in-home service, the servicer will come to the product location. If it is necessary to remove the product for repair, the servicer will reinstall the product at no extra charge, provided it was installed according to Sharp's Installation Instructions. To find the location of the nearest Sharp Authorized Servicer, call Sharp toll free at 1-800-BE-SHARP (1-800-237-4277).

TO OBTAIN SUPPLY, ACCESSORY OR PRODUCT INFORMATION, CALL 1-800-BE-SHARP OR VISIT www.sharpusa.com.
SAVE THE PROOF OF PURCHASE AS IT IS NEEDED SHOULD YOUR OVEN EVER REQUIRE WARRANTY SERVICE.

IMPORTANT SAFETY INSTRUCTIONS

When using electrical appliances, basic safety precautions should be followed, including the following:

WARNING-To reduce the risk of burns, electric shock, fire, injury to persons or exposure to excessive microwave energy:

1. Read all instructions before using the appliance.
2. Read and follow the specific "PRECAUTIONS TO AVOID POSSIBLE EXPOSURE TO EXCESSIVE MICROWAVE ENERGY" found on page 3.
3. This appliance must be grounded. Connect only to properly grounded outlet. See "GROUNDING INSTRUCTIONS" found on page 6.
4. Install or locate this appliance only in accordance with the provided installation instructions.
5. Some products such as whole eggs and sealed containers - for example, closed glass jars are able to explode and should not be heated in this oven.
6. Use this appliance only for its intended use as described in this manual. Do not use corrosive chemicals or vapors in this appliance. This type of oven is specifically designed to heat, cook, or dry food. It is not designed for industrial or laboratory use.
7. As with any appliance, close supervision is necessary when used by children.
8. Do not operate this appliance if it has a damaged cord or plug, if it is not working properly, or if it has been damaged or dropped.
9. This appliance should be serviced only by qualified service personnel.

   Contact nearest authorized service facility for examination, repair or adjustment.
10. Do not cover or block any openings on the appliance.
11. Do not store this appliance outdoors. Do not use this product near water — for example, near a kitchen sink, in a wet basement, near a swimming pool, or similar locations.
12. Do not immerse cord or plug in water.
13. Keep cord away from heated surfaces.
14. Do not let cord hang over edge of table or counter.
15. When cleaning surfaces of door and oven that comes together on closing the door, use only mild, non-abrasive soaps or detergents applied with a sponge or soft cloth.
16. To reduce the risk of fire in the oven cavity:
    a) Do not overcook food. Carefully attend appliance when paper, plastic, or other combustible materials are placed inside the oven to facilitate cooking.
    b) Remove wire twist-ties from paper or plastic bags before placing bag in oven.
    c) If materials inside the oven ignite, keep oven door closed, turn oven off, and disconnect the power cord, or shut off power at the fuse or circuit breaker panel.
    d) Do not use the cavity for storage purposes. Do not leave paper products, cooking utensils, or food in the cavity when not in use.
17. Liquids, such as water, coffee, or tea are able to be overheated beyond the boiling point without appearing to be boiling due to surface tension of the liquid. Visible bubbling or boiling when the container is removed from the microwave oven is not always present. THIS COULD RESULT IN VERY HOT LIQUIDS SUDDENLY BOILING OVER WHEN A SPOON OR OTHER UTENSIL IS INSERTED INTO THE LIQUID.

    To reduce the risk of injury to persons:
    a) Do not overheat the liquid.
    b) Stir the liquid both before and halfway through heating it.
    c) Do not use straight-sided containers with narrow necks.
    d) After heating, allow the container to stand in the microwave oven for a short time before removing the container.
    e) Use extreme care when inserting a spoon or other utensil into the container.
18. Do not use this microwave oven to heat corrosive chemicals (for example, sulfides and chlorides). Vapors from such corrosive chemicals may interact with the contact and springs of the safety interlock switches thereby rendering them inoperable.
19. Never heat oil or fat for deep frying as you cannot control the temperature and doing so may lead to overheating and fire.
20. Do not operate the oven without the glass tray in place. Be sure it is properly sitting on the rotating base.
21. Use care when cleaning the vent hood filters.
    Corrosive cleaning agents such as lye-based oven cleaners may damage the filters.
22. Clean the ventilating hood frequently. Do not allow grease to accumulate on the hood or the filters.
23. Suitable for use above both gas and electric cooking equipment up to 30 inches wide.
24. Do not use this oven for commercial purposes It is designed for household use only.
25. When flaming foods under the hood, turn the fan on. Keep the area under the hood properly ventilated at all times. Turn off cooking equipment if you see flames or a fire occurs.

SAVE THESE INSTRUCTIONS

FEDERAL COMMUNICATIONS COMMISSION RADIO FREQUENCY INTERFERENCE STATEMENT

WARNING:
This equipment generates and uses ISM frequency energy and if not installed and used properly, that is in strict accordance with the manufacturer's instructions, may cause interference to radio and television reception.
It has been type-tested and found to comply with limits for an ISM Equipment pursuant to part 18 of FCC Rules, which are designed to provide reasonable protection against such interference in a residential installation.
However, there is no guarantee that interference will not occur in a particular installation.
If this equipment does cause interference to radio or television reception, which can be determined by turning the equipment off and on, the user is encouraged to try to correct the interference by one or more of the followings.

- Reorient the receiving antenna of radio or television.
- Relocate the Microwave oven with respect to the receiver.
- Move the microwave oven away from the receiver.
- Plug the microwave oven into a different outlet so that microwave oven and receiver are on different branch circuits.

THE MANUFACTURER is not responsible for any radio or TV interference caused by
UNAUTHORIZED MODIFICATION to this microwave oven. It is the responsibility of the user to correct such interference.

GROUNDING INSTRUCTIONS

This appliance must be grounded. In the event of an electrical short circuit, the grounding plug reduces the risk of electric shock by providing an escape wire for electric current. This appliance is equipped with a cord having a grounding wire with a grounding plug. The plug must be plugged into an outlet that is properly installed and grounded.

WARNING:

Improper use of the grounding can result in a risk of electric shock.
Consult a qualified electrician or serviceman if the grounding instructions are not completely understood, or if doubt exists as to whether the appliance is properly grounded, and either

1) If it is necessary to use an extension cord, use only a 3-wire extension cord that has a 3-blade grounding plug, and a 3-slot receptacle that will accept the plug on the appliance. The marked rating of the extension cord shall be equal to or greater than the electrical rating of the appliance, or
2) Do not use an extension cord. If the power supply cord is too short, have a qualified electrician or serviceman install an outlet near the appliance.

WARNING:

Do not cut or remove the third (ground) prong from the power cord under any circumstances.

INSTALLATION GUIDE

1. Examine the oven after unpacking.

Unpack the oven, remove all packaging material and examine the oven for any damage such as dents on the interior or exterior of the oven, broken door latches, cracks in the door, or a door that is not lined up correctly. If there is any damage, do not operate the oven and notify your dealer immediately.

2. Checking the parts

Carefully unpack your microwave oven, and make sure you've received all the parts shown below. If your microwave oven was damaged during shipping, or if you do not have all the parts, call 1-800-BE-SHARP.

Image	Part & Description	Q'ty	Image	Part & Description	Q'ty
	Hardware Kit (Screws)	1	Installation Manual	Installation Manual	1
	Damper (Exhaust Adapter)	1	Operation Manual	Operation Manual	1
	Mounting Plate	1		Guide Roller Ring	1
Top Cabinet Template	Top Cabinet Template	1		Grease Filters Model # RK245	2
Wall Template	Rear Wall Template	1		Glass Turntable	1
	Metal Rack	1		Charcoal Filter Model # RK233	1

3. Location

- The installation of this appliance must be performed by a qualified technician or service company. Failing to have a qualified technician install the oven may result in electric shock, fire, an explosion, problems with the product, or injury.
- Do not install this appliance in a humid, oily, or dusty location, or in a location exposed to direct sunlight or water (rain drops).
- Plug the power plug into the wall socket firmly. Do not use a damaged power plug, damaged power cord, or loose wall socket.
- Do not mount over a sink.
- Do not stand on top of the microwave or place objects (such as laundry, oven covers, lighted candles, lighted cigarettes, dishes, chemicals, metal objects, etc.) on the appliance. This may result in electric shock, fire, problems with the product, or injury.

4. Power supply.

- Check your local power source. This microwave oven requires a current of approximately 14 amperes, 120Volts, 60Hz and a grounded outlet.

a) A short power-supply cord is provided to reduce the risks of the user becoming entangled in or tripping over a longer cord.

b) Longer cord sets or extension cords are available and may be used if care is exercised in their use.

c) If a long cord or extension cord is used:

- The marked electrical rating of the cord set or extension cord should be at least as great as the electrical rating of the oven.
- The extension cord must be a grounding type 3-wire cord.
- The longer cord should be arranged so that it will not drape the table top or counter where it can be pulled on by children or tripped over unintentionally.

- Check power cord and outlet
  - Remove all foreign substances such as dust or water from the power plug terminals and contact points using a dry cloth on a regular basis.
  - Unplug the power plug and clean it with a dry cloth.
  - Plug the power cord into a properly grounded 3 pronged outlet. Your oven should be the only appliance connected to this circuit.
  - Sharing a wall socket with other appliances, using a power strip, or extending the power cord may result in electric shock or fire.
  - Do not use an electric transformer. It may result in electric shock or fire.
  - Ensure that the voltage, frequency and current provided match the product's specifications.

When use 3-pronged plug

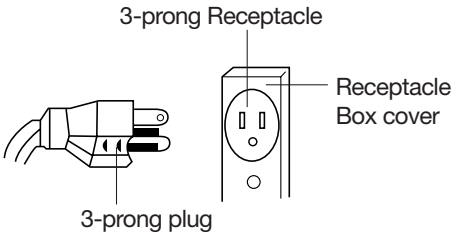

When use grounding adaptor, make sure the receptacle box is fully grounded.

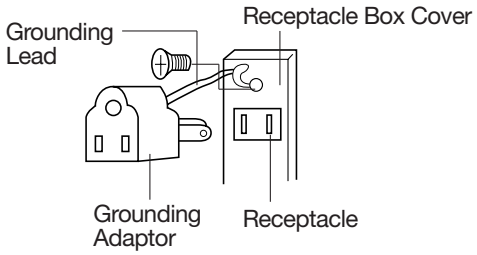

"THE CANADIAN ELECTRICAL CODE DOES NOT ALLOW THE USE OF THE GROUNDING ADAPTOR"

5. Critical usage WARNINGS

If the microwave appliance is flooded, please contact your nearest service center. Failing to do so may result in electric shock or fire.

Read and follow the specific "Precautions to Avoid Possible Exposure to Excessive Microwave Energy" found on Page 3.

If the microwave generates a strange noise, a burning smell or smoke, unplug it immediately and contact your nearest service center.

- In the event of a gas leak (propane gas, LP gas, etc.), ventilate the room immediately. Do not touch the microwave, power cord, or plug.
- Do not use a ventilating fan.
- A spark may result in an explosion or fire.
  Take care that the door or any of the other parts do not come into contact with your body while cooking or just after cooking.
- In the event of a grease fire on the surface units below the oven, smother the flaming pan on the surface unit by covering the pan completely with a lid, a cookie sheet or a flat tray.
  Never leave surface units beneath your oven unattended at high heat settings. Boil overs cause smoking and greasy spills that may ignite and spread if the vent fan is operating. To minimize automatic fan operation, use adequate sized cookware. Use high heat on surface units only when necessary.
  If materials inside the oven should ignite, keep the oven door closed, turn the oven off and disconnect the power cord, or shut off power at the fuse or circuit breaker panel. If the door is opened, the fire may spread.
- Always observe Safety Precautions when using your oven. Never try to repair the oven on your own. There is dangerous voltage inside. If the oven needs to be repaired, contact an authorized service center near you.

SPECIFICATIONS

POWER SUPPLY		120V AC, 60Hz SINGLE PHASE WITH GROUNDING
MICROWAVE	INPUT POWER	1650 W
	ENERGY OUTPUT	1100 W
	FREQUENCY	2,450MHz
OUTSIDE DIMENSIONS (W x H x D)		29.9 x 16.4 x 15.7 in
CAVITY DIMENSIONS (W x H x D)		21.1 x 10.6 x 14.6 in
CAVITY VOLUME		1.9 cu.ft
NET WEIGHT		APPROX. 56.2 lbs
TIMER		99 min. 99 sec.
POWER SELECTIONS		11 Levels

** Specifications are subject to change without notice.*

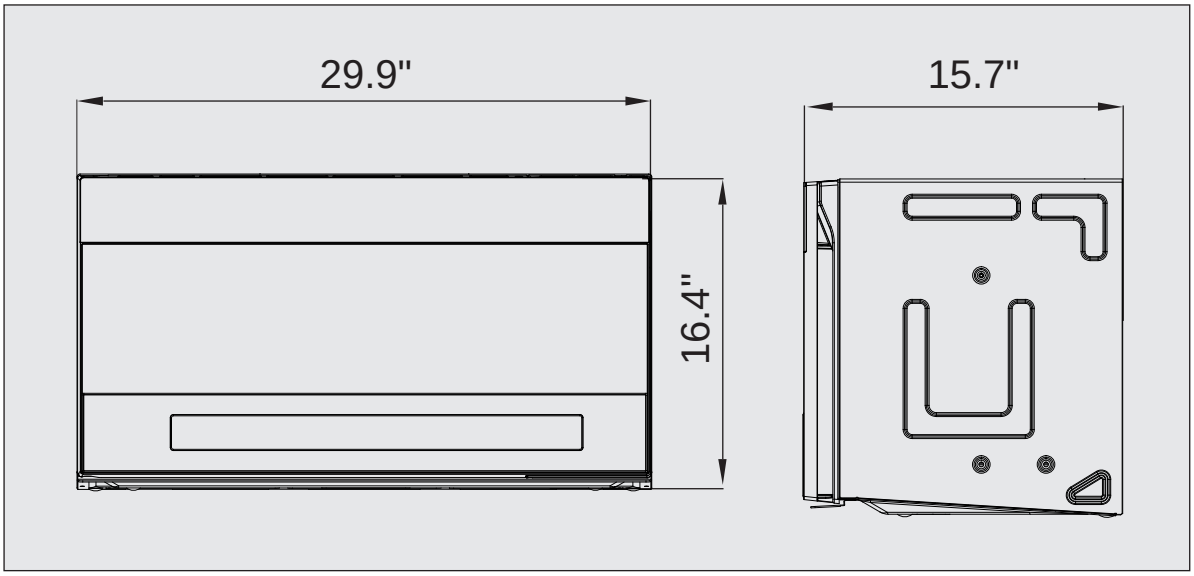

FEATURES DIAGRAM

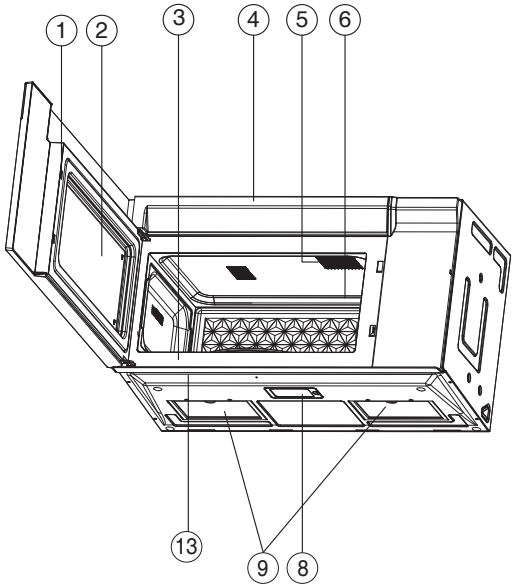

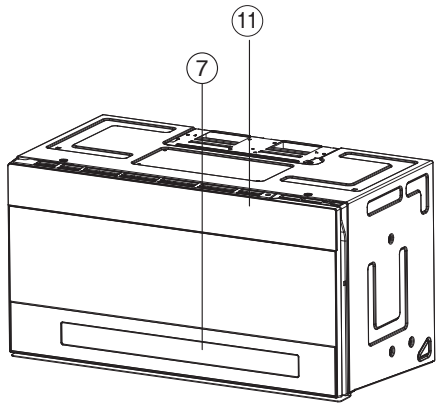

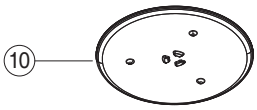

① **DOOR LATCHES**

② **WINDOW with METAL SHIELD -** Screen allows cooking to be viewed while keeping microwaves confined in oven.

③ **MODEL NUMBER PLATE -** Located on the front wall of the microwave oven.

④ **CHARCOAL FILTER (behind Vent Grille)**

⑤ **OVEN LIGHT** - Automatically turns on when the oven door is open and operating.

⑥ **WAVEGUIDE COVER**
Protects the microwave outlet from splashes of cooking foods.

⑦ **TOUCH CONTROL PANEL and DIGITAL DISPLAY** - For detailed information on each feature, see Features Diagram section, page 11, 12.

⑧ **COOKTOP LIGHT**

⑨ **GREASE FILTERS**

⑩ **TURNTABLE / GLASS TRAY -** Composed of glass tray and roller guide. The roller guide is placed first on the bottom of the microwave oven of which Coupler has already been installed at the center and supports the glass tray. Both parts must be in place when using the microwave oven.

⑪ **VENTILATION MOTOR -** Your microwave oven is designed for adaptation to the following three types of ventilation.
(Recirculation ventilation system, Vertical ventilation system, Horizontal ventilation system)
See installation manual to Select the type of ventilation required for your installation.

⑫ **GUIDE ROLLER RING**

⑬ **HEAT DEFLECTOR**

⑭ **METAL RACK**

FEATURES DIAGRAM

The Touch Control Panel allows you to set the oven controls with the press of a finger.
It's designed to be easy to use and understand.

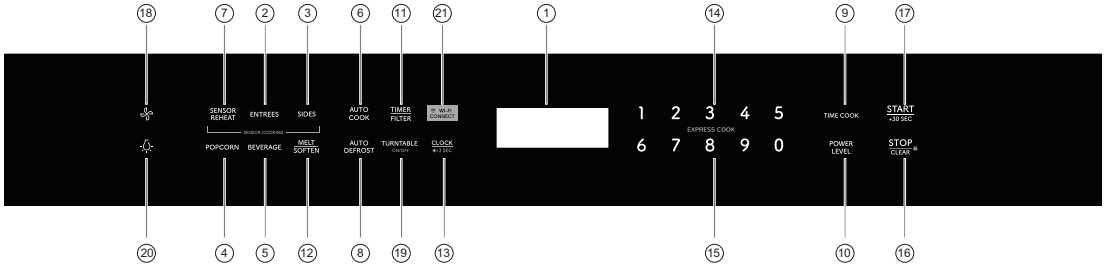

- ◆ Each time a pad is pressed, a BEEP will sound.
- ◆ When **STOP/CLEAR** pad is pressed during oven operation, the oven will stop, however, all programmed information is retained. To clear all information, press the **STOP/CLEAR** pad again.

FEATURES DIAGRAM

① **DISPLAY -** Displays time of day, time or power level being used, cooking mode and instructions.

② **ENTREES -** Press this pad to cook Frozen Dinner, Chicken, Fish, Casserole/Pizza, or Frozen Breakfast. The microwave oven sensor will automatically adjust cooking time to the type and amount of food.

③ **SIDES -** Press this pad to cook Fresh Vegetables, Frozen Vegetables, Rice, or Potatoes. The microwave oven sensor will automatically adjust cooking time to the type and amount of food.

④ **POPCORN -** Press this pad to cook prepackaged microwave popcorn weight 1.75/3.0/3.5 ounces.

⑤ **BEVERAGE -** Press this pad to reheat Milk or Coffee.

⑥ **AUTO COOK -** Press this pad to cook preprogramed menus.

⑦ **SENSOR REHEAT -** Press this pad to reheat food.

⑧ **AUTO DEFROST -** Press this pad to set defrosting time or defrosting weight.

⑨ **TIME COOK -** Press this pad to set the Microwave cooking time.

- Power Level 10 (High) is automatic but lower heat levels may be programmed.

⑩ **POWER LEVEL -** Press this pad if you want to change from automatic Power Level 10 (High) for cooking.

⑪ **TIMER/FILTER**

Press this pad to use as a minute timer, delay cooking, hold setting after cooking. Press and hold this pad for 3 seconds to reset time after replacing the filter.

Charcoal filters must be replaced every 6 months.

⑫ **MELT/SOFTEN -** Press this pad to melt or soften Butter, Chocolate, Cheese, Ice Cream and Cream Cheese.

⑬ **CLOCK -** Press this pad to enter time of day.

> Also press and hold this pad for 3 seconds to turn sound on/off. For detailed information on this feature, see Controls section, page 29.

⑭ **NUMBER PADS -** Press these pads to enter cooking time, defrosting time or weight, time of day, power level.

⑮ **EXPRESS COOK -** Press these pads to set 1-10 minutes preset cooking time at 100% power level.

⑯ **STOP/CLEAR -** When pressed once, it pauses the oven operation. When pressed twice, it resets the oven and erases all settings (except time of day).

> Also press and hold this pad for 3 seconds to set child safety lock function. For detailed information on this feature, see Controls section, page 30.

⑰ **START/+30 SEC -** After all selections are made, press this pad to start the oven or timer.

⑱ **-** Press this pad to turn the fan on turbo, high, medium, low or off.

⑲ **TURNTABLE On/Off -** Press this pad to turn turntable on or off.

⑳ **-** Press this pad to turn on or off the cooktop light.

㉑ **WIFI CONNECT -** Press this pad to turn on or off your oven's Wi-Fi connection

OPERATION PROCEDURE

This section includes useful information about oven operation.

1 Plug power supply cord into a standard 3-pronged 15 Amps 120V AC 60Hz power outlet.

2 After placing the food in a suitable container, open the oven door and put it on the glass tray. The glass tray and roller guide must always be in place during cooking.

3 Close the door. Make sure that it is firmly closed.

4 The oven light is on when the microwave oven is operating.

5 The oven door can be opened at any time during operation by pulling the door open using the pocket handle. The oven will automatically stop.

6 Each time a pad is pressed, a BEEP will sound to acknowledge the press.

7 The oven automatically cooks on full power unless set to a lower power level.

8 The display will flash 12:00 when the oven CLOCK is not set.

9 Time clock returns to the present time when the cooking time ends.

10 When the STOP/CLEAR pad is pressed during the oven operation, the oven stops cooking and all information retained. To erase all information (except the present time), press the STOP/CLEAR pad once more. If the oven door is opened during the oven operation, all information is retained.

11 If the START pad is pressed and the oven does not operate, check the area between the door and door seal for obstructions and make sure the door is closed securely. The oven will not start cooking until the door is completely closed or the program has been reset.

Make sure the oven is properly installed and plugged into the electrical outlet.

TO SET POWER LEVEL

- The power level is set by pressing the POWER LEVEL pad and number pad. If you wish to use a different power level, press TIME COOK, set the desired cook time, then press the POWER LEVEL pad and then press the START pad.
  Enter the power level desired by pressing the appropriate number pad. The chart shows the display, the power level and the percentage of power.

PRESS POWER PAD AND NUMBER	POWER LEVEL (DISPLAY)	APPROXIMATE PERCENTAGE OF POWER
POWER LEVEL + 1 + 0	PL-Hi	100%
POWER LEVEL + 9	PL-90	90%
POWER LEVEL + 8	PL-80	80%
POWER LEVEL + 7	PL-70	70%
POWER LEVEL + 6	PL-60	60%
POWER LEVEL + 5	PL-50	50%
POWER LEVEL + 4	PL-40	40%
POWER LEVEL + 3	PL-30	30%
POWER LEVEL + 2	PL-20	20%
POWER LEVEL + 1	PL-10	10%
POWER LEVEL + 0	PL-0	0%

NOTE : If “PL-0” is selected, the oven will work with the fan but no power. You can use this level to remove odors.

SETTING UP ALEXA ON YOUR MICROWAVE OVEN

Your microwave oven can be controlled with Alexa using any Alexa-enabled device such as Echo or Echo Dot. To control your microwave oven using Alexa, you'll need to set up your microwave and connect to Alexa using one of the below pairing methods.
Before you pair, ensure your mobile device is connected to a 2.4 GHz Wi-Fi network.

Pairing Method 1: Zero-Touch Setup (ZTS)

In order to pair using this method, **all** pre-requisites listed below must be met. If not, go to pairing method #2 or #3.

- ✓ You opted-in to store your Wi-Fi credentials to your Amazon account in the past. This occurs when you previously set up another Echo family device or a Works with Alexa device.
- ✓ The microwave must have been ordered from the same Amazon account and while ordering you must have opted to link the device upon purchase. If microwave was purchased/received as a gift, or user de-selected this option upon purchase, the microwave will not be linked to end user's Amazon/Alexa account and ZTS will not be enabled. Please go to pairing method #2 or #3.
- ✓ The microwave would need to be within the Wi-Fi range of the user's Wi-Fi network.
- ✓ The microwave should be within the wireless range of an Echo family device, which was signed into using the same Amazon account.

If above conditions are met:

1. Ensure that home Wi-Fi is on and the device is in setup mode.
2. If the Wi-Fi icon stops blinking and stays on steadily, the device is ready to be controlled by using Alexa. (If the Wi-Fi icon is off, press the Wi-Fi button once to turn the Wi-Fi on.)
3. Open Alexa app on your phone and sign into the same Amazon account as the one above. The Microwave should appear in the list of devices.

- **Setup mode :** While the device is in setup mode, the Wi-Fi icon is flashing until successfully paired. Setup mode is activated for 5 minutes. After 5 minutes, setup mode will time out.
- **Turning off the Wi-Fi on the device :** Used to turn on or off your device's Wi-Fi connection. If you turn the Wi-Fi off on the device by pressing the Wi-Fi CONNECT button, the Wi-Fi icon is off on the microwave LED display and Alexa will no longer be able to send commands to your oven. But you can still cook using the oven's keypad.

Pairing Method 2: Barcode Setup (BCS)

If Zero-Touch Setup (ZTS) is not possible, you can set up your microwave and connect to Alexa using Barcode Setup (BCS).

1. Install the latest version of Alexa app on your smart device and login with your Amazon account.
2. Ensure your mobile device is connected to a 2.4 GHz Wi-Fi network.
3. When Wi-Fi icon starts flashing, the microwave oven is ready for setup. (If the Wi-Fi icon is off, reset the microwave oven by pressing Wi-Fi CONNECT button.)
4. Open the Alexa App, tap the Devices icon in the lower right, and tap the "+" icon in the top right. Select "Add Device" and "Microwave" press "Sharp" to begin set up for your microwave oven. Follow on-screen instructions.

NOTE: The QR code used for microwave oven setup is attached inside the product. Please open the door and scan the QR code to the right of a key image on the front side of the product.

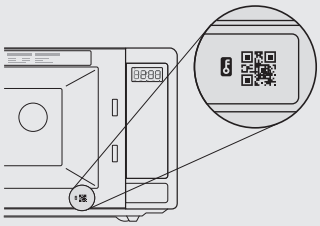

6. If the Wi-Fi icon stops blinking and is off after 5 minutes, reset the microwave oven by pressing Wi-Fi CONNECT button restart from the step 5.

Pairing Method 3: User Guided Setup (UGS)

If the QR code on the device is lost or has been damaged and you cannot use Pairing Method #2, you can set up your microwave and connect to Alexa using User Guided Setup (UGS).

1. Install the latest version of Alexa app on your smart device and login with your Amazon account.
2. Open the Alexa App, tap the Devices icon in the lower right, and tap the “+” icon in the top right. Select “Add Device” and “Microwave” press "Sharp" to begin set up for your microwave oven. Follow on-screen instructions.
3. When a screen with 2D Barcode appears, Press DON’T HAVE A BARCODE to continue setup.
4. Follow the on-screen instructions to set up your microwave oven.
   a. Ensure your mobile device is connected to a 2.4GHz Wi-Fi network.
   b. Press Wi-Fi CONNECT button once, "ON PAIR"will appear on the microwave LED display. The Wi-Fi icon will start blinking.
   c. Press NEXT to continue setup.
5. If the Wi-Fi icon stops blinking and is off after 5 minutes, setup times out. Restart from the step 4.b.

After setup, the LED display will turn on the Wi-Fi icon and show local time in your location.

NOTE: It may take a few minutes for the LED display to show the correct local time.

Once setup is completed, it is automatically setup even after turning the power of the oven off and on.

NOTE: When you delete the product from the Alexa app, you must set up again.

OPERATING YOUR MICROWAVE OVEN

You can use your oven without setting it up for Alexa control.
However, we highly recommend using your oven with Alexa control to unlock the full potential.
Throughout this section, the following icons indicate:

Instructions to operate the oven with voice.

NOTE: As a safety measure, the oven can only be commanded using voice within 10 minutes of the door being closed.

SETTING THE CLOCK

When the oven is first plugged in, the display will flash "12:00" and a tone will sound. If the AC power ever goes off, the display will show “12:00” when the power comes back on.

1. Press the CLOCK pad.
   This is a 12 hour clock system.

   The current CLOCK is displayed.

2. Enter the correct time of day by pressing the number pads in sequence.

   This digital clock allows you to set from 1:00 to 12:59.

3. Press START/+30 SEC pad.

NOTE:
1. If you attempt to enter an incorrect time, the time will not be set and a error signal tone will sound. Press the CLOCK pad and re-enter the time.
2. If you want to turn sound on or off, press and hold CLOCK pad for 3 seconds. For detailed information on this feature, see Controls section, page 29.

SETTING THE TIMER

Timer operates as a minute timer.
Timer operates without microwave energy.

HOW TO USE AS A MINUTE TIMER

1. Press TIMER/FILTER pad.

   The TIMER indicators display and “ TIMER” "ENTER TIME" is displayed.

2. Press the amount of time you want to count down.

   The display will show what you pressed.

3. Press START/+30 SEC pad.

When you press the START/+30 SEC pad, the TIME indicator starts blinking and the display counts down the time remaing in TIMER mode.
When TIMER mode ends, you will hear 2 beeps. To end the timer early, press the TIMER/FILTER pad once while the display is counting down.
Pressing the STOP/CLEAR button also stops the timer early.

AUTO COOK

"Alexa, microwave X hot cereal."

"Alexa, microwave frozen kids meal to the microwave."

"Alexa, microwave X scrambled eggs."

"Alexa, microwave X of bacon."

"Alexa, microwave frozen pizza."

"Alexa, microwave stuffed mushrooms."

"Alexa, microwave fudge brownies."

"Alexa, microwave X of hot dogs."

PRESS PAD	DISPLAY	FOOD ITEM	QUANTITY/WEIGHT/SIZE	SELECT PAD
Once	HOT CEREAL	Hot Cereal	1 serving	1
			2 servings	2
			3 servings	3
Twice	MEAL IN A CUP	Meal	2.4 oz	
Three times	FROZEN KIDS MEAL	Frozen Kids Meal	8.8 oz	
Four times	SCRAMBLED EGGS	Scrambled Eggs	1 Egg	1
			2 Eggs	2
			3 Eggs	3
			4 Eggs	4
			5 Eggs	5
			6 Eggs	6

Five times	BACON	Bacon	1 Slices	1
			2 Slices	2
			3 Slices	3
Six times	FROZEN PIZZA	Frozen Pizza	12 oz	
Seven times	STUFFED MUSHROOMS	Stuffed Mushrooms	16 oz	
Eight times	FUDGE BROWNIES	Fudge Brownies	18 oz	
Nine times	HOT DOGS	Hot dogs	1 Hot Dog	1
			2 Hot Dogs	2
			3 Hot Dogs	3
			4 Hot Dogs	4
			5 Hot Dogs	5
			6 Hot Dogs	6

WEIGHT DEFROSTING

"Alexa, defrost X of meat."

"Alexa, defrost X of Poultry."

"Alexa, defrost X of Fish."

AUTO DEFROST lets you easily defrost food by eliminating guesswork in determining defrosting time. See the chart for specific settings to use

AUTO DEFROST

1. Press AUTO DEFROST pad once for Meat, twice for Poultry, three times for Fish.	The display will show what you pressed.
2. Press START/+30 SEC pad.	The display will show "ENTER" and "WEIGHT"
3. Press number pads for the desired defrosting weight.	The display will show what you pressed.
4. Press START/+30 SEC pad.	**NOTE :** Your oven can be programmed for 0.1 to 6.0 lbs.

When you press START/+30 SEC pad, the DEFR. indicator will show the oven is in the AUTO DEFROST mode. The display counts down the time to show you how much defrosting time is left in the AUTO DEFROST mode.
The oven beeps during the defrosting cycle to signal that the food needs to be turned or rearranged. When the defrosting time ends, you will hear 2 beeps.

AUTO DEFROST

PRESS PAD	FOOD ITEM	QUANTITY/WEIGHT/SIZE
Auto Defrost x1	Meat	0.1~6.0 lbs
Auto Defrost x2	Poultry	0.1~6.0 lbs
Auto Defrost x3	Fish	0.1~6.0 lbs

MELT/SOFTEN

"Alexa, melt X of butter."

"Alexa, melt X of chocolate."

"Alexa, soften X of cheese."

"Alexa, soften X of ice cream to the microwave."

"Alexa, soften X of cream cheese."

The melt/soften feature can be used to melt or soften butter, chocolate, cheese, ice cream and cream cheese. See the chart for specific settings to use.

MELT SOFTEN

1. Press MELT/SOFTEN pad once for melt butter, twice for melt chocolate, three times for soften cheese, four times for soften cream cheese, five times for soften ice cream.

2. Press START/+30 SEC pad.

The display will show what you pressed.

MELT/SOFTEN ITEM CHART

PRESS PAD	DISPLAY	FOOD ITEM	QUANTITY/WEIGHT/SIZE	SELECT PAD
Once	MELT BUTTER	Butter	3.5 oz	1
			7 oz	2
Twice	MELT CHOCOLATE	Chocolate	7 oz	1
			10 oz	2
Three times	SOFTEN CHEESE	Cheese	1.75 oz	1
			3.5 oz	2
Four times	SOFTEN CREAM CHEESE	Cream Cheese	3 oz	1
			8 oz	2
Five times	SOFTEN ICE CREAM	Ice Cream	1 Pint	1
			1.5 Quart	2

TIME COOK

"Alexa, microwave for X."

To microwave by time, say “Alexa, microwave for X,” where X is the amount of time you’d like to cook for For example, to cook for 5 minutes, say “Alexa, microwave for 5 minutes.” Or, to cook for 2 minutes and 39 seconds, say “Alexa, microwave for 2 minutes and 39 seconds.”

"Alexa, add X to microwave."

While microwaving, you can ask to cook for additional time by saying “Alexa, add X in the microwave.” where X is the amount of time you’d like to add. For example, to add 2 minutes to the cooking time while the microwave is already running, say “Alexa, add 2 minutes to the microwave.”

NOTE : By default, the oven will microwave at power 10 (maximum power)

"Alexa, microwave for X on power level Y."

By default, your oven will microwave at power 10 (maximum power). To cook at a specific power, say “Alexa, microwave for X on power level Y,” where X is the amount of time you’d like to cook for and Y is the power level.
For example, to cook at power 5 for 3 minutes, say “Alexa, microwave for 3 minutes at power level 5.”

MICROWAVE COOK MODE

TIME COOK	1. Press TIME COOK pad.	“ ENTER COOK TIME” is displayed.
	2. Press number pads for the cooking time.	The display will show what you pressed.
POWER LEVEL	3. Press POWER LEVEL pad.	The display will show PL-Hi.
	4. Press number pads for power level (0~10).	The display will show PL-0 ~ PL-Hi.
	5. Press START/+30 SEC pad.	

NOTE : Your oven can be programmed for 99 minutes 99 seconds. (99:99)

When you press START/+30 SEC pad, the COOK indicator starts display to show the oven is cooking.
The display counts down the time to show how much cooking time is left. When the cooking time ends, you will hear 2 beeps.

NOTE : Using lower power levels increases the cooking time which is recommended for foods such as cheese, milk and slow cooking of meats.

COOKING IN TWO STAGES

Cooking + Cooking

TIME COOK	1. Press TIME COOK pad.	"ENTER COOK TIME" is displayed.
	2. Press number pads for the cooking time.	The display will show what you pressed.
POWER LEVEL	3. Press POWER LEVEL pad.	The display will show PL-Hi.
	4. Press number pads for power level (0~10)	The display will show PL-0 ~ PL-Hi.
TIME COOK	5. Press TIME COOK pad.	"ENTER COOK TIME" is displayed.
	6. Press number pads for the cooking time.	The display will show what you pressed.
POWER LEVEL	7. Press POWER LEVEL pad.	The display will show PL-Hi.
	8. Press number pads for power level (0~10)	The display will show PL-0 ~ PL-Hi.
	9. Press START/+30 SEC pad.	

NOTE : Your oven can be programmed for 99 minutes 99 seconds. (99:99)

When you press START/+30 SEC pad, the COOK indicator starts blinking to show the oven is in cook for stage 1. At the end of stage 1, the oven will beep and start stage 2. The display counts down the time remaining in stage 2 mode. When stage 2 ends, you will hear 2 beeps.

+30 SEC

+30 sec allows you to reheat for 30 seconds at 100% (full power) by simply pressing the START/+30 SEC pad. By repeatedly pressing the START/+30 SEC pad, during a cooking cycle, you can also extend reheating time to 99 minutes 99 seconds by 30 second increments.

"Alexa, microwave for 30 seconds."

"Alexa, cook for 30 seconds."

"Alexa, add 30 seconds to microwave."

When you press the START/+30 SEC pad, ":30" is displayed and the oven starts reheating.

EXPRESS COOK

Express Cook is a quick way to set cooking time from 1-10 minutes at 100% (full power).

1. Press one of the Express Cook pads (from 1-10) for 1-10 minutes of cooking at 100% (full power).

The display is changed into cooking time and the oven starts cooking.

ONE TOUCH COOK (PRESET)

One touch cooking allows you to cook or reheat many of your favorite foods by pressing just one pad.
To increase quantity, press the chosen pad until the number in the display is same as desired quantity to cook.

"Alexa, microwave X of popcorn."

POPCORN

1. Press POPCORN pad once for 1.75 oz bag, twice for 3.0 oz bag or three times for 3.5 oz bag.

When you press POPCORN pad once, “1.75” is displayed.

2. Press START/+30 SEC pad.

NOTE : 1. Use prepackaged room temperature microwave popcorn.
2. Place bag in oven according to manufacturer’s directions.
3. Pop only one bag at a time.
4. After popping, open bag carefully; popcorn and steam are extremely hot.
5. Do not reheat unpopped kernels or reuse bag.
6. Do not leave oven unattended while popping popcorn.

CAUTION : If prepackaged popcorn is of a different weight than the recommended weight, do not use the popcorn pad. Follow the manufacturer's instruction.

"Alexa, microwave X cup of milk."

"Alexa, microwave X cup of coffee."

BEVERAGE

1. Press BEVERAGE pad once for MILK, twice for COFFEE.

The display will show what you pressed.

2. Press START/+30 SEC pad.

The display will show "1 CUP"

3. Press number pads for the desired amount of cups.

The display will show what you pressed.

NOTE : Your oven can be programmed for 1 to 3.

4. Press START/+30 SEC pad.

SENSOR REHEAT

SENSOR REHEAT allows you to reheat a chilled meal with one press of pad. It is not necessary to select power level or cooking time. The built-in sensor measures the humidity of the food and calculates the cooking time.

SENSOR REHEAT

1. Press SENSOR REHEAT pad. The "SENSOR" and "REHEAT" is displayed.
2. Press START/+30 SEC pad.

SENSOR OPERATIONS

The Sensor Cook categories are designed to detect the increasing humidity released by the food during the cooking process. The microwave oven sensor will automatically adjust the cooking time to the type and amount of food.

Using Sensor Settings

1. After the oven is plugged in, wait 2 minutes before using Sensor Cook.
2. Be sure the exterior of the cooking container and the interior of the oven are dry. Wipe off any moisture with a dry cloth or paper towel.
3. The oven works with foods at normal storage temperature.
4. More or less food than the quantity listed in the chart should be cooked following the guidelines in any microwave cookbook.
5. Do not open the oven door or press STOP/CLEAR pad until cooking time appears on the display window. The measurement of vapor will be interrupted.

   When the sensor detects the vapor emitted from the food, the remainder of cooking time will appear. The door may be opened when remaining cooking time appears on the display. At this time, you may stir or season food, as desired.
6. Always use microwave-safe containers and cover them with loose fitting lids or vented plastic wrap. Never use tight sealing plastic containers. They will prevent steam from escaping and this will mislead the sensor, usually causing the food to overcook.
7. Check food for temperature or doneness after cooking. **If food is not completely cooked, enter additional cooking time manually.** Do not use one of the Sensor Cook categories twice in succession on the same food portion. This may result in severely overcooked or burnt food.

Covering Foods

Some foods work best when covered. Use the cover recommended in the Sensor Cook Chart for these foods.

1. Casserole lid.
2. Plastic wrap: Use plastic wrap recommended for microwave cooking. Cover dish loosely; allow approximately 1/2 inch to remain uncovered to allow steam to escape. Plastic wrap should not touch food.
3. Wax paper : Cover dish completely; fold excess wrap under dish to secure. If dish is wider than paper, overlap two pieces at least one inch to cover.

Be careful when removing any covering to allow steam to escape away from you.

SENSOR MENU

Sensor is semi-conductor device that detects the vapor emitted from the food as it heats. The sensor adjusts the cooking time and power level for various food and quantities and you don't need to enter the weight or quantity of the food.

"Alexa, microwave frozen dinner."

"Alexa, microwave chicken."

"Alexa, microwave fish."

"Alexa, microwave casserole/pasta."

"Alexa, microwave pizza."

"Alexa, microwave frozen breakfast."

"Alexa, microwave fresh vegetables."

"Alexa, microwave frozen vegetables."

"Alexa, microwave rice."

"Alexa, microwave potato."

ENTREES MENU CHART

PRESS PAD	DISPLAY	FOOD	QUANTITY/WEIGHT
Once	FROZEN DINNER	Frozen Dinner	9-18 oz
Twice	CHICKEN	Chicken	7-18 oz
Three times	FISH	Fish	7-18 oz
Four times	CASSEROLE	Casserole/Pasta	2-6 oz
Fve times	PIZZA	Pizza	6-8 oz
Six times	FROZEN BREAKFAST	Frozen Breakfast	8-12 oz

SIDES MENU CHART

PRESS PAD	DISPLAY	FOOD	QUANTITY/WEIGHT
Once	FRESH VEGGIES	Fresh Veggies	7-20 oz
Twice	FROZEN VEGGIES	Frozen Veggies	7-20 oz
Three Times	RICE	Rice	1-2 cups
Four Times	POTATO	Potato	1-4 potatoes

TURNTABLE ON-OFF

"Alexa, turn off turntable on microwave."

"Alexa, turn on turntable on microwave."

For best cooking results, the turntable should be on. However the turntable can be turned off so that it does not rotate when extra large dishes are used.

1. TURNTABLE ON/OFF pad.

The options are displayed for 2 seconds.

NOTE :
1. This option is not available in auto cook and defrost.
2. Sometimes the turntable can become too hot to touch. Be careful touching the turntable during and after cooking.
3. Do not run the oven empty.

VENT FAN

"Alexa, set the microwave vent fan to turbo."

"Alexa, set the microwave vent fan to high."

"Alexa, set the microwave vent fan to medium."

"Alexa, set the microwave vent fan to low."

"Alexa, set the microwave vent fan to off."

The vent fan removes steam and other vapors from surface cooking. You can control the 4-speed fan by pressing the VENT FAN pad.

1. Press pad once for turbo fan speed, twice for high fan speed , three times medium fan speed,four times for low fan speed or five times to turn the fan off.

The options are displayed for 2 seconds.

COOKTOP LIGHT

"Alexa, turn ON cooktop light on microwave."

"Alexa, turn OFF cooktop light on microwave."

You can control the light by pressing the LIGHT pad.

1. Press pad once to turn the light on High, twice to turn the light on Low or three times to turn off the light

The options are displayed for 2 seconds.

MUTE

"Alexa, turn ON sound on microwave."

"Alexa, turn OFF sound on microwave."

Audible signals are available to guide you when setting and using your oven.
To mute, press CLOCK pad for 3 seconds. OFF will be displayed. To sound on, press CLOCK pad for 3 seconds. A beep sounds and ON will be displayed.

FILTER RESET

If your oven is vented to the inside, the charcoal filter should be replaced approximately every 6 months. The charcoal filter cannot be cleaned.
The FILTER indicator will light up when it is time to replace the charcoal filter.
Press and hold TIMER/FILTER pad for 3 seconds after replacing the filter.
See page 35.

TO SET POWER SAVE MODE

1. Press the STOP/CLEAR pad.
   LED is blank.
   The display will turn off and a beep sounds.
2. Press STOP/CLEAR pad again to turn display back on.

CHILD SAFETY LOCK

"Alexa, turn ON child lock on microwave."

"Alexa, turn OFF child lock on microwave."

STOP/CLEAR

Child safety lock feature may lock the control panel to prevent the oven from being accidentally started or used by children. To lock, press and hold STOP/CLEAR pad for 3 seconds.
A beep sounds and "LOCKED" will be displayed.
To unlock, press and hold STOP/CLEAR pad for 3 seconds. A beep sounds.

NOTE :
1. While the Child Lock is active, only the STOP/CLEAR pad works to unlock it.
2. Microwave oven cannot be used while Child Lock is activated.

TO STOP THE OVEN WHILE THE OVEN IS OPERATING

"Alexa, stop the microwave."

"Alexa, pause the microwave."

"Alexa, restart/resume the microwave."

STOP/CLEAR

1. Press the STOP/CLEAR pad.
   - You can restart the oven by pressing the START pad.
2. Open the door.
   - You can restart the oven by closing the door and pressing the START/+30 SEC pad.

NOTE : Oven stops operating when door is opened.

CARE AND CLEANING

WARNING:
The oven should be cleaned regularly and any food deposits removed.
Failure to maintain the oven in a clean condition could lead to deterioration of the surface that could adversely affect the life of the appliance and possibly result in a hazardous situation.

MICROWAVE OVEN INTERIOR

Disconnect the power cord before cleaning or leave the door open to inactivate the oven during cleaning.

The oven interior should be cleaned after each use with a damp cloth to keep it free from grease and soil buildup. Stubborn soils can be removed with a plastic scrub pad. When cleaning interior surfaces and surfaces of door and oven that come together when the door is closed, use only mild, non-abrasive soaps or detergents applied with a sponge or soft cloth.
Odors can be eliminated from the inside of the oven by boiling a solution of one cup of water and several tablespoons of lemon juice in the oven for 5-7 minutes. This also helps loosen any dried soil in the oven. Wipe off excess moisture after use.

NOTE :
- Do not spray or pour liquid cleansers directly onto a surface. Spray or pour cleanser onto a cloth or sponge and then clean.
- Do not use abrasive cleaners, oven cleaners, abrasive cleaning pads or steel wool, as they can scratch or dull oven surfaces.
- Do not remove or insert knife around the stirrer cover to clean, it may damage the cover or affect the cooking performance of your oven.

OVEN BOTTOM

Wash oven bottom with hot sudsy water, rinse and dry. Do not use excessive amounts of water when cleaning the oven, especially around the turntable. Do not allow water or cleaning agents to seep into turntable gears located underneath.

GLASS TRAY/TURNTABLE

Allow to cool before removing and cleaning. Wash in soapy water or dishwasher.

ROLLER GUIDE

Clean frequently to prevent excessive noise. Wash in soapy water or dishwasher.

OVEN EXTERIOR

Wipe the outside of your oven with a soapy cloth, rinse and dry. Do not use abrasive cleaners. They may scratch the surface.

LIGHT COMPARTMENT

Clean off the grease and dust on the light compartment cover on the bottom side of the microwave oven often with warm water and detergent.

CONTROL PANEL

Wipe with a damp cloth. Dry. Do not spray cleaners directly on panel. Spray cleaners on cloth and then wipe.

WAVEGUIDE COVER

The waveguide cover is located on the right side wall of the oven cavity. It is made from mica so requires special care. Keep the waveguide cover clean to assure good oven performance. Carefully wipe with a damp cloth any food spatters from the surface of the cover immediately after they occur. Built-up splashes may overheat and cause smoke or possibly catch fire. DO NOT REMOVE THE WAVEGUIDE COVER.

THE EXHAUST FEATURE

The exhaust hood feature on your microwave oven is equipped with two metal filters which collect grease. When the fan is being operated, air is drawn up through the filters and is then discharged through the venting to the outside or through the charcoal filters if not vented to the outside.

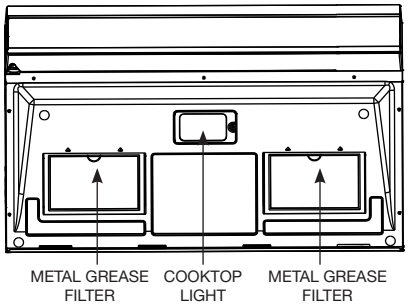

REUSABLE GREASE FILTERS

The reusable grease filters should be cleaned at least once a month. Never operate the microwave without the filters in place. In situations where flaming might occur on surfaces below the hood, filters will stop the entry of flames into the unit.

TO REMOVE GREASE FILTER

To remove, slide them to the rear using the tabs. Pull down and out.

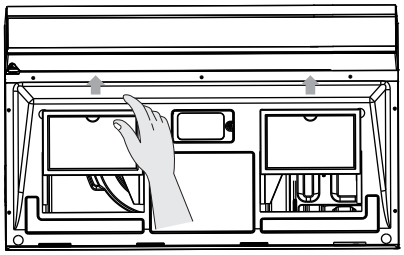

TO CLEAN GREASE FILTER

To clean grease filters, soak and then agitate filter in solution of hot water and detergent. Do not use ammonia or ammonia products because they will darken the metal. Light brushing can be used to remove embedded dirt. Rinse, shake and remove moisture before replacing.

TO REPLACE GREASE FILTER

To replace, slide the filters into the frame slots on the back of each opening. Press up and to the front to lock into place.

You can purchase Grease Filters from 1-800-BE-SHARP. Accessory Model # RK245.

LIGHT REPLACEMENT

Cooktop Light

When replacing the cooktop light, make sure that you are wearing gloves to avoid injury from the heat of the lamp.

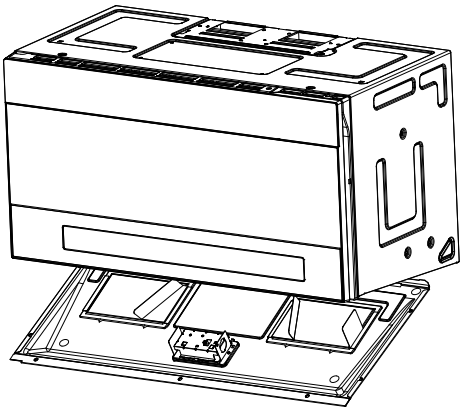

1. Disconnect the main power supply;
2. Remove the 7 screws from the Baseplate;
3. Unplug the wire harness of LED plate lamp
4. Take out LED Cover
5. Remove screw from Cover and replace LED plate lamp
6. Reassemble LED cover on the Baseplate
7. Insert the wire harness again
8. Relock the 7 screws on the Baseplate;
9. Reconnect the main power supply.

Oven Light

When replacing the oven light, make sure that you are wearing gloves to avoid injury from the heat of the light.

Vent grille mounting screws

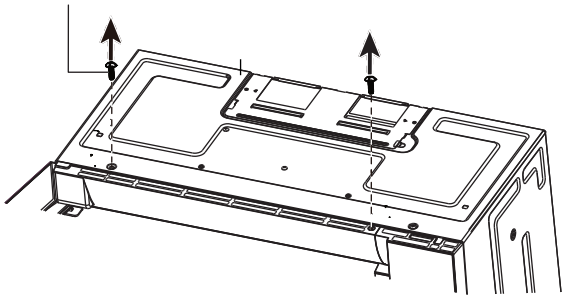

1. Disconnect power to your microwave at the circuit breaker or by unplugging it.
2. Remove the vent grille mounting screws from the top center of the vent grille, then push down on the tabs at

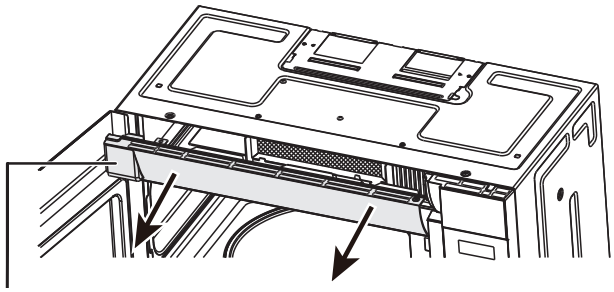

3. Pull the vent grille away from the unit.

Vent grille

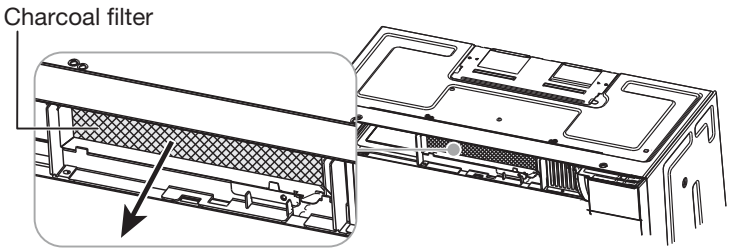

4. Remove the charcoal filter.

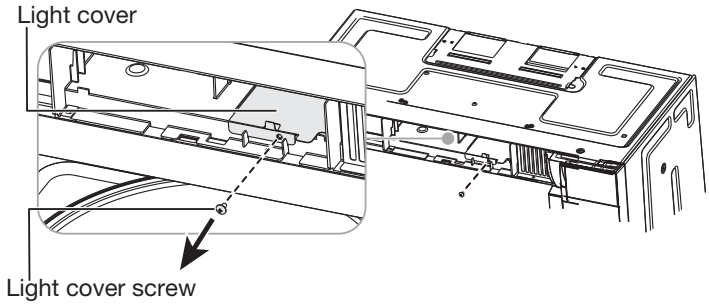

5. Open the light cover by removing the light cover screw, then carefully pull up on the front edge.

6. Unplug the wire harness of the lamp, remove the old light bulb, and replace it.

7. Replace the microwave light cover by carefully pushing it into place, then replace the mounting screws.

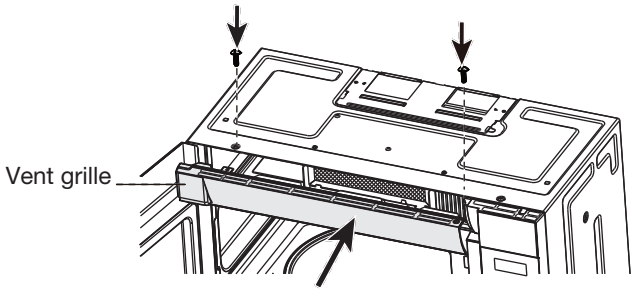

8. Push the vent grille back into place and replace the vent grille mounting screws.

INSTALL/REPLACE CHARCOAL FILTER

Charcoal Filter

If your oven is vented to the inside, the charcoal filter should be replaced if it is used for approximately 6 months.

You can purchase Charcoal Filter from 1-800-BE-SHARP. Accessory Model # RK233.

Vent grille mounting screws

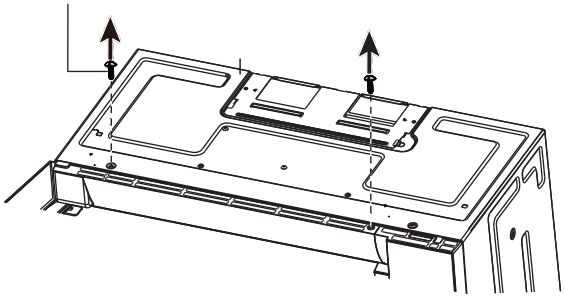

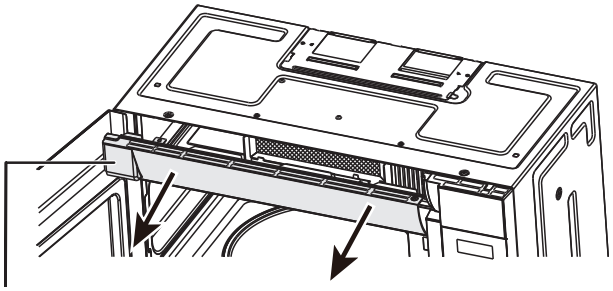

Vent grille

Charcoal filter

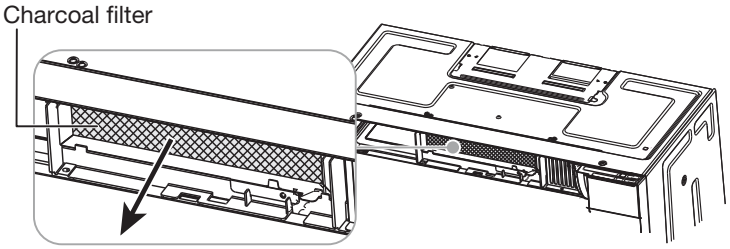

1. Unplug the oven or turn off the power at the main power supply.
2. Remove the grille air mounting 2 screws and open the door.
3. Slide the grille air to the left, then pull it straight out.
4. Push the charcoal filter backwards and remove it.
5. Slide a new charcoal filter into place.
6. Replace the grille air and 2 screws and close the door.
7. Plug the oven in or turn on the power at the main power supply.

Check the following to be sure a service call is necessary:

If nothing on the oven operates:
- Check for a blown circuit fuse or a tripped main circuit breaker.
- Check if oven is properly connected to electric circuit in house.
- Check that controls are set properly.
- Check that the cooking time is set.

If the oven interior light does not work:
- The LED light may be loose or defective. See page 33 or call 1-800-BE-SHARP.

If oven will not cook:
- Check that control panel was programmed correctly.
- Check that door is firmly closed.
- Check that **START/+30 SEC pad** was pressed.
- **Auto Start** may have been set.
- The **Control Lockout** may have been set
- Check the area between the door and seal for obstructions.

If oven takes longer than normal to cook or cooks too rapidly:
- Be sure the **Power Level** is programmed properly.
- Check instructions on food density, etc.
- Verify that voltage to the microwave oven is not low.

If the time-of-day clock does not always keep correct time:
- Check that the power cord is fully inserted into the outlet receptacle.
- Check that the oven is properly grounded.
- Try plugging the oven into an outlet on a separate electrical circuit.

If oven floor or glass tray are hot:
- This is normal. The floor is absorbing heat from the food.

If the interior of oven collects moisture:
- This is normal. Food gives off moisture when cooking and the steam collects on the door and the oven surface. Wipe off excess moisture from oven after each use.

If food cooks unevenly:
- Refer to your recipe for proper cooking procedures.
- Be sure food is evenly shaped.
- Be sure food is completely defrosted before cooking.
- Check placement of aluminum strips used to prevent overcooking.

If food is undercooked:
- Check recipe to be sure all directions (amount, time, and power levels) were correctly followed.
- Check household voltage.
- Try plugging the oven into an outlet on a separate electrical circuit.
- Be sure food was completely defrosted before cooking.

If food is overcooked:
- Check recipe to be sure all directions (amount, time, and power levels) were correctly followed.
- The initial temperature of food may have been higher than normal.

If arcing (sparks) occur:
- Be sure microwave-safe dishes were used.
- Be sure wire twist ties were not used.
- Be sure oven was not operated when empty.

If the display shows a time counting down but the oven is not cooking:
- Check that door is firmly closed.

QUESTIONS AND ANSWERS

*** Q : I accidentally ran my microwave oven without any food in it. Is it damaged?**

A : Running the oven empty for a short time will not damage the oven. However, it is not recommended.

*** Q : Can the oven be used with the glass tray or roller guide removed?**

A : No. Both the glass tray and roller guide must always be used in the oven before cooking.

*** Q : Can I open the door when the oven is operating?**

A : The door can be opened anytime during the cooking operation. Then microwave energy will be instantly switched off and the time setting will maintain until the door is closed.

*** Q : What does "Er01" message mean?**

A : "Er01" means SENSOR ERROR and will appear if you open the oven door or press STOP/CLEAR pad while cooking times is displayed. To continue cooking, press the STOP/CLEAR pad and cook manually.

*** Q : Why do I have moisture in my microwave oven after cooking?**

A : The moisture on the side of your microwave oven is normal. It is caused by steam from cooking food hitting the cool oven surface.

*** Q : Will the microwave oven be damaged if it operates while empty?**

A : Yes. Never run it empty.

*** Q : Why do eggs sometimes pop?**

A : When baking or poaching eggs, the yolk may pop due to steam build-up inside the yolk membrane. To prevent this, simply pierce the yolk with a toothpick before cooking. Never cook eggs without piercing their shells.

*** Q : Why is this standing time recommended after the cooking operation has been completed?**

A : Standing time is very important.
With microwave cooking, the heat is in the food, not in the oven. Many foods build up enough internal heat to allow the cooking process to continue, even after the food is removed from the oven. Standing time for joints of meat, large vegetables and cakes is to allow the inside to cook completely, without overcooking the outside.

*** Q : What does “standing time” mean?**

A : “Standing time” means that food should be removed from the oven and covered for additional time to allow it to finish cooking.

*** Q : Why does my oven not always cook as fast as the microwave cooking guide says?**

A : Check your cooking guide again, to make sure you’ve followed directions exactly; and to see what might cause variations in cooking time. Cooking guide times and heat settings are suggestions, to help prevent over-cooking. The most common problem in getting used to a microwave oven.
Variations in the size, shape and weights and dimensions could require longer cooking time. Use your own judgement along with the cooking guide suggestions to check whether the food has been properly cooked just as you would do with a conventional cooker.

*** Q : Does microwave energy pass through the viewing screen in the door?**

A : No. The metal screen bounces back the energy to the oven cavity. The holes are made to allow light to pass through. They do not let microwave energy pass through.

*** Q : Can I operate my microwave oven without the turntable or turn the turntable over to hold a large dish?**

A : No. If you remove or turn over the turntable, you will get poor cooking results. Dishes used in your oven must fit on the turntable.

*** Q : Is it normal for the turntable to turn in either direction?**

A : Yes. The turntable rotates clockwise or counterclockwise, depending on the rotation of the motor when the cooking cycle begins.

*** Q : Can I pop popcorn in my microwave oven? How do I get the best results?**

A : Yes. Pop packaged microwave popcorn following manufacture’s guidelines. Do not use regular paper bags. Use the “listening test” by stopping the oven as soon as the popping slows to a “pop” every 1 or 2 seconds. Do not repop unpopped kernels. Do not pop popcorn in glass cookware.

UTENSIL GUIDE

Only use utensils that are suitable for use in microwave ovens.
To cook food in the microwave oven, the microwave must be able to penetrate the food, without being reflected or absorbed by the dish used. Care must therefore be taken choosing the utensil. If the utensil is marked microwave-safe, you do not need to worry. The following table lists various utensil and indicates whether and how they should be used in a microwave oven.

UTENSIL	SAFE	COMMENTS
Aluminium Foil	▲	Can be used in small quantities to protect areas against overcooking. Arcing can occur if the foil is too close to the oven wall or if too much foil is used.
Crisp Plate	●	Do not preheat for more than 8 minutes.
China and Earthenware	●	Porcelain, pottery, glazed earthenware and bone china are usually suitable, unless decorated with a metal trim.
Disposable Polyester Cardboard Dishes	●	Some frozen foods are packaged in these dishes.
Fast-Food Packaging		
• Polystyrene Cups Containers	●	Can be used to warm food. Overheating may cause the polystyrene to melt.
• Paper Dags or Newspaper	×	May catch fire.
• Recycled Paper or Metal Trims	×	May cause arcing.
Glassware		
• Oven-To-Table Ware	●	Can be used, unless decorated with a metal trim.
• Fine Glassware	●	Can be used to warm foods or liquids. Delicate glass may break or crack if heated suddenly.
• Glass Jars	●	Must remove the lid. Suitable for warming only.
Metal		
• Dishes	×	May cause arcing or fire.
• Freezer Bag Twist Ties	×	
Paper		
• Plates, Cups, Napkins and Kitchen Paper	●	For short cooking times and warming. Also to absorb excess moisture.
• Recycled Paper	×	May cause arcing.
Plastic		
• Containers	●	Particularly with heat-resistant thermoplastic. Some other plastics may warp or discolour at high temperatures. Do not use Melamine plastic.
• Cling Film	●	Can be used to retain moisture. Should not touch the food. Take care when removing the film as hot steam will escape.
• Freezer Bags	▲	Only if boilable or oven-proof. Should not be airtight. Prick with a fork, if necessary.
Wax or Grease-Proof Paper	●	Can be used to retain moisture and prevent spattering.

● : Recommended use
▲ : Limited Use
× : Not Recommended

USE YOUR MICROWAVE OVEN SAFELY

General Use

Do not attempt to defeat or tamper with safety interlocks.
Do not place any object between the oven front frame and the door or allow residue to build up on sealing surfaces. Wipe with a mild detergent, rinse and dry. Never use abrasive powders or pads.
Do not subject the oven door to strain or weight such as a child hanging on an open door.
This could cause the oven to fall forward resulting in injury to you and damage to the oven.

Do not operate the oven if door seals or sealing surfaces are damaged; or if door is bent; or if hinges are loose or broken.
Do not operate the oven empty. This will damage the oven.
Do not attempt to dry clothes, newspapers or other materials in the oven. They may catch on fire.
Do not use recycled paper products as they may contain impurities which may cause sparks or fires.
Do not hit or strike the control panel with hard objects. This can damage the oven.

Food

Never use your microwave oven for home canning. The oven is not designed for proper home canning. Improperly canned food may spoil and be dangerous to consume.
Always use the minimum recipe cooking time. It is better to undercook rather than overcook foods.
Undercooked foods can be returned to the oven for more cooking. If food is overcooked, nothing can be done.
Heat small quantities of food or foods with low moisture carefully. These can quickly dry out, burn or catch on fire.
Do not heat eggs in the shell. Pressure may build up and eggs can explode.
Potatoes, apples, egg yolks and sausages are examples of food with non-porous skins.
These must be pierced before cooking to prevent bursting.

Do not attempt to deep fat fry in your microwave oven.
Always allow a standing time of at least 20 seconds after the oven has been switched off to allow the temperature to even out, stir during heating, if necessary, and ALWAYS stir after heating. To prevent eruptive boiling and possible scalding, you should put a spoon or glass stick into the beverages and stir before, during and after heating.
Do not leave the oven unattended while popping corn.
Do not pop corn in a paper bag unless it is the commercially prepared Microwave Popcorn product. The kernels can overheat and ignite a brown paper bag.
Do not exceed the Microwave Popcorn manufacturers suggested popping time.
Longer popping does not yield more popcorn but it can result in scorch, burn or fire. Remember, the Popcorn bag and tray can be too hot to handle. Remove with caution and use pot holders.

ARCING

If you see arcing, open the door and correct the problem.

Arcing is the microwave term for sparks in the oven.
Arcing is caused by:

- Metal or foil touching the side of the oven.
- Foil not molded to food (upturned edges act like antennas).
- Metal, such as twist-ties, poultry pins, or gold rimmed dishes, in the microwave.
- Recycled paper towels containing small metal pieces being used in the microwave.
- Dirt or grease on waveguide cover.

MICROWAVING PRINCIPLES

Microwave energy has been used in this country to cook and reheat food since early experiments with RADAR in World War II. Microwaves are present in the atmosphere all the time, both naturally and manmade sources. Manmade sources include radar, radio, television, telecommunication links and car phones.

HOW MICROWAVES COOK FOOD

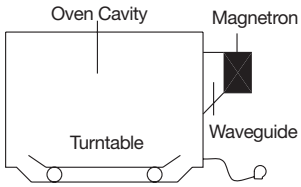

In a microwave oven, electricity is converted into microwave by the MAGNETRON.

▶TRANSMISSION

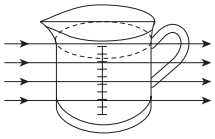

Then they pass through the cooking containers to be absorbed by the water molecules in the food, all foods contain water to a more or lesser extent.

▶REFLECTION

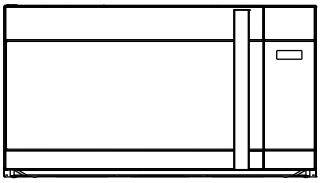

The microwaves bounce off the metal walls and the metal door screen.

▶ABSORPTION

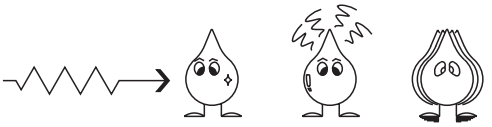

Microwave Water Molecule Absorption Vibration

The microwaves cause the water molecules to vibrate which causes FRICTION, i.e. HEAT. This heat then cooks the food. Microwaves are also attracted to fat and sugar particles, and foods high in these will cook more quickly. Microwaves can only penetrate to a depth of 1½ - 2 inches(4-5cm) and as heat spreads through the food by conduction, just as in a traditional oven, the food cooks from the outside inwards.

CONVERSION CHARTS

WEIGHT MEASURES	
15 g	1/2 oz.
25 g	1 oz.
50 g	2 oz.
100 g	4 oz.
175 g	6 oz.
225 g	8 oz.
450 g	1 lb.

VOLUME MEASURES	
30 ml	1 fl.oz.
100 ml	3 fl.oz.
150 ml	5 fl.oz. (1/4 pt)
300 ml	10 fl.oz. (1/2 pt)
600 ml	20 fl.oz. (1pt)

SPOON MEASURES	
1.25 ml	1/4 tsp
2.5 ml	1/2 tsp
5 ml	1 tsp
15 ml	1 tbsp

FLUID MEASUREMENTS		
1 Cup	= 8 fl.oz	= 240 ml
1 Pint	= 16 fl.oz. (UK 20 fl.oz.)	= 480 ml (UK 560 ml)
1 Quart	= 32 fl.oz. (UK 40 fl.oz.)	= 960 ml (UK 1120 ml)
1 Gallon	= 128 fl.oz. (UK 160 fl.oz.)	= 3840 ml (UK 4500 ml)

COOKING TECHNIQUES

STANDING TIME

Dense foods e.g. meat, jacket potatoes and cakes, require standing time (inside or outside of the oven) after cooking, to allow heat to finish conducting to cook the center completely. Wrap meat joints and jacket potatoes in aluminium foil while standing. Meat joints need approx. 10-15 minutes, jacket potatoes 5 minutes. Other foods such as plated meal, vegetables, fish etc require 2-5 minutes standing. After defrosting food, standing time should also be allowed. If food is not cooked after standing time, return to the oven and cook for additional time.

MOISTURE CONTENT

Many fresh foods e.g. vegetables and fruit, vary in their moisture content throughout the season, particularly jacket potatoes. For this reason cooking times may have to be adjusted. Dry ingredients e.g. rice, pasta, can dry out during storage so cooking times may differ.

DENSITY

Porous airy foods heat more quickly than dense heavy foods.

CLING FILM

Cling film helps keep the food moist and the trapped steam assists in speeding up cooking times. Pierce before cooking to allow excess steam to escape. Always take care when removing cling film from a dish as the build-up of steam will be very hot.

SHAPE

Even shapes cook evenly. Food cooks better by microwave when in a round container rather than square.

SPACING

Foods cook more quickly and evenly if spaced apart. NEVER pile foods on top of each other.

STARTING TEMPERATURE

The colder the food, the longer it takes to heat up. Food from a fridge takes longer to reheat than food at room temperature.

LIQUIDS

All liquids must be stirred before and during heating. Water especially must be stirred before and during heating, to avoid eruption. Do not heat liquids that have previously been boiled. DO NOT OVERHEAT.

TURNING & STIRRING

Some foods require stirring during cooking. Meat and poultry should be turned after half the cooking time.

ARRANGING

Individual foods e.g. chicken portions or chops, should be placed on a dish so that the thicker parts are towards the outside.

QUANTITY

Small quantities cook faster than large quantities, also small meals will reheat more quickly than large portions.

PIERCING

The skin or membrane on some foods will cause steam to build up during cooking. These foods must be pierced or a strip of skin should be peeled off before cooking to allow the steam to escape. Eggs, potatoes, apples, sausages etc, will all need to be pierced before cooking. DO NOT ATTEMPT TO BOIL EGGS IN THEIR SHELLS.

COVERING

Cover foods with microwave cling film or a lid. Cover fish, vegetables, casseroles, soups. Do not cover cakes, sauces, jacket potatoes or pastry items.

DEFROSTING GUIDE

- ▶ Do not defrost covered meat. Covering might allow cooking to take place. Always remove outer wrap and tray. Use only containers that are microwave-safe.
- ▶ Begin defrosting whole poultry breast-side-down. Begin defrosting roasts fat-side-down.
- ▶ The shape of the package alters the defrosting time. Shallow rectangular shapes defrost more quickly than a deep block.
- ▶ After 1/3 of the defrost time has elapsed, check the food. You may wish to turn over, break apart, rearrange or remove thawed portions of the food.
- ▶ During defrost, the oven will prompt you to turn the over. At this point, open oven door and check the food. Follow the techniques listed below for optimum defrost results.
  Then, close oven door, press the START pad to complete defrosting.
- ▶ When defrosted, food should be cool, but softened in all areas. If still slightly icy, return to microwave oven very briefly, or let stand a few minutes. After defrosting, allow food to stand 5-60 minutes if there are any icy areas.
  Poultry and fish may be placed under running cool water until defrosted.
- ➪ ***Turn over*** : Roast, ribs, whole poultry, turkey breasts, hot dogs, sausages, steaks, or chops.
- ➪ ***Rearrange*** : Break apart or separate steaks, chops, hamburger patties, ground meat, chicken or seafood pieces, chunks of meat such as stew beef.
- ➪ ***Shield*** : Use small strips of aluminum foil to protect thin areas or edges of unevenly shaped foods such as chicken wings. To prevent arcing, do not allow foil to come within 1-inch of oven walls or door.
- ➪ ***Remove*** : To prevent cooking, thawed portions should be removed from the oven at this point. This may shorten defrost time for food weighing less than 3 lbs.(1350g).

DEFROSTING CHART (by Time Defrost)

ITEM & WEIGHT	DEFROSTING TIME	STANDING TIME	SPECIAL TECHNIQUES
BEEF			
Minced beef 1 lb./450g	8-10 min.	15-20 min.	Break apart and remove thawed portions with fork.
Stew Meat 1 1/2 lbs./675g	12-14 min.	25-30 min.	Separate and rearrange on
Patties 4(4oz./110g)	6-8 min.	15-20 min.	Turn over after half the time.
PORK			
Spare Ribs 1 lb./450g	6-8 min.	25-30 min.	Separate and rearrange once.
Chops 4(5oz./125g)	6-8 min.	25-30 min.	Separate and turn over once.
Minced pork 1 lb./450g	7-8min.	15-20 min.	Break apart and remove thawed portions with fork.
POULTRY			
Whole Chicken 2 1/2 lbs./1125g	22-24 min.	45-90 min.	Break side down. Turn over after half the time. Shield as needed.
Chicken Breasts 1 lbs./450g	8-10 min.	15-30 min.	Separate and rearrange once.
Fried Chicken(cut up) 2 lbs./900g	17-19 min.	25-30 min.	Separate and rearrange once.
Chicken Thighs 1 1/2 lbs./675g	12-14 min.	15-30 min.	Separate and rearrange once.
FISH & SEAFOOD			
Whole Fish 1 lb./450g	6-8 min.	15-20 min.	Turn over after half the time. Shield as needed.
Fish Fillets 1 1/2 lb./675g	8-10 min.	15-20 min.	Turn over after half the time. Shield as needed.
Shrimp 1/2 lb./225g	2-3 min.	15-20 min.	Turn over after half the time. Shield as needed.

COOKING & REHEATING CHART

Cooking chart

ITEM	POWER LEVEL	COOKING TIME PER LB./450G	SPECIAL INSTRUCTION
MEAT			- Chilled meat and poultry should be removed from the refrigerator at least 30 minutes before cooking. - Always let the meat and poultry stand, covered after cooking.
Beef joint - Rare	PL-80	6-8 min.	
- Medium	PL-80	7-10 min.	
- well done	PL-80	9-11 min.	
Pork Joint	PL-Hi	9-12 min.	
Bacon joint	PL-Hi	5-7 min.	
POULTRY			
Whole chicken	PL-Hi	4-9 min.	
Portions chicken	PL-80	5-7 min.	
Breast (boned)	PL-80	6-8 min.	
FISH			- Brush a little oil or melted butter over the fish, or add 15~30ml(1-2 tbsp) lemon juice, wine, stock, milk or water. - Always let the fish stand, covered, after cooking
Fish Fillets	PL-Hi	3-5 min.	
Whole Mackerel, Cleaned and prepared	PL-Hi	3-5 min.	
Whole Trout, Cleaned & Prepared	PL-Hi	4-6 min.	
Salmon steaks	PL-Hi	4-6 min.	

NOTE : The above times should be regarded only as a guide. Allow for difference in individual tastes and preferences. The times may vary due to the shape, cut, and composition of the food. Frozen meat, poultry and fish must be thoroughly thawed before cooking.

COOKING & REHEATING CHART

Reheating chart

- Baby food particularly needs to be checked carefully before serving to prevent burns.
- When heating pre-packaged ready-cooked foods, always follow the pack instructions carefully.
- If you freeze foods which were bought from the fresh or chilled counters, remember that they should be thoroughly thawed before following the heating instructions on the packed. It's worth putting a note on them so that other members of the household will remember too.
- Remember to remove metal ties and transfer food from foil containers before reheating.
- Chilled (refrigerated) food takes longer to reheat than food at room temperature (such as just-cooled food or food from the store cupboard).
- All foods should be reheated using full microwave power.

ITEM	COOKING TIME	SPECIAL INSTRUCTIONS
Baby food 4.5oz.	20 sec.	Empty into a small serving bowl. Stir well once or twice during heating. Before serving, check the temperature carefully.
Baby milk 100ml / 4fl.oz. 225ml / 8fl.oz.	20-30 sec. 40-50 sec.	Stir or shake well and pour into a sterilized bottle. Before serving, shake well and check the temperature carefully.
Sandwich roll or bun 1 roll	20-30 sec.	Wrap in paper towel and place on glass microwaveable rack. ***Note: Do not use recycled paper towels.**
Lasagna 1 serving (10 ½ oz./300g)	4-6 min.	Place lasagna on microwaveable plate. Cover with plastic wrap and vent.
Casserole 1 cup 4 cups	1 ½-3 min. 5-7 min.	Cook covered, in microwaveable casserole. Stir once halfway through cooking.
Mashed potatoes 1 cup 4 cups	2-3 min. 6-8 min.	Cook covered, in microwaveable casserole. Stir once halfway through cooking.
Baked beans 1 cup	2-3 min.	Cook covered, in microwaveable casserole. Stir once halfway through cooking.
Ravioli or pasta in sauce 1 cup 4 cups	2-3 min. 6-9 min.	Cook covered, in microwaveable casserole. Stir once halfway through cooking.

VEGETABLE CHART

Use a suitable glass pyrex bowl with lid. Add 30-45ml cold water (2-3 tbsp.) for every 250g unless another water quantity is recommended - see table. Cook covered for the minimum time - see table.
Continue cooking to get the result you prefer. Stir once during and once after cooking. Add salt, herbs or butter after cooking. Cover during a standing time of 3 minutes.
Hint : cut the fresh vegetables into even sized pieces. The smaller they are cut, the quicker they will cook.
All vegetables should be cooked using full microwave power.

Cooking Guide for fresh vegetables

VEGETABLES	WEIGHT	TIME	COMMENTS
Broccoli	½ lb./250g 1 lb./500g	3-5 min 6-8 min	Prepare even sized florets. Arrange the stems to the centre.
Brussels sprouts	½ lb./250g	3-5 min	Add 60-75ml(4-5 tbsp.) water.
Carrots	½ lb./250g	3-5 min	Cut carrots into even sized slices.
Cauliflower	½ lb./250g 1 lb./500g	3-5 min 6-8 min	Prepare even sized florets. Cut big florets into halves. Arrange stems to the center.
Zucchini	½ lb./250g	3-4 min	Cut Zucchini into slices. Add 30ml(2tbsp.) water or a knob of butter. Cook until just tender.
Aubergine (eggplant)	½ lb./250g	3-4 min	Cut eggplant into small slices and sprinkle with 1 tablespoon lemon juice.
Leeks	½ lb./250g	3-4 min	Cut leeks into thick slices.
Mushrooms	0.3 lb./125g ½ lb./250g	2-3 min 3-4 min	Prepare small whole or sliced mushrooms. Do not add any water. Sprinkle with lemon juice. Spice with salt and pepper. Drain before serving.
Onions	½ lb./250g	2-3 min	Cut onions into slices or halves. Add only 15ml(1tbsp.) water.
Pepper	½ lb./250g	2-4 min	Cut pepper into small slices.
Potatoes	½ lb./250g 1 lb./500g	4-5 min 6-8 min	Weigh the peeled potatoes and cut them into similar sized halves or quarters.
Turnip cabbage	½ lb./250g	4-6 min	Cut turnip cabbage into small cubes.

Cooking Guide for frozen vegetables

VEGETABLES	WEIGHT	TIME	INSTRUCTIONS
Spinach	0.3 lb./125g	2-3 min	Add 15ml(1tbsp.) cold water.
Broccoli	½ lb./250g	4-5 min	Add 30ml(2 tbsp.) cold water.
Peas	½ lb./250g	4-5 min	Add 15ml(1 tbsp.) cold water.
Green beans	½ lb./250g	4-5½ min	Add 30ml(2 tbsp.) cold water.
Mixed vegetables (carrots/peas/corn)	½ lb./250g	4-5 min	Add 15ml(1 tbsp.) cold water.
Mixed vegetables (Chinese style)	½ lb./250g	4-6 min	Add 15ml(1 tbsp.) cold water.

RECIPES

TOMATO & ORANGE SOUP

1 oz.(25g) butter
1 medium onion, chopped
1 large carrot & 1 large potato, chopped
13/4lb(800g) canned, chopped tomatoes
juice and grated rind of 1 small orange
11/2pints(900ml) hot vegetable stock
salt and pepper to taste

1. Melt the butter in a large bowl on PL-Hi for 30 seconds.
2. Add the onion, carrot and potato and cook on PL-Hi for 4 minutes. stir halfway through cooking.
3. Add the tomatoes, orange juice, orange rind and stock. Mix thoroughly. Season with salt and pepper to taste. Cover the bowl and cook on PL-Hi for 15 minutes. stir 2-3 times during cooking, until the vegetables are tender.
4. Blend and serve immediately.

FRENCH ONION SOUP

1 large onions, sliced
1 tbsp (15ml) corn oil
2 oz.(50g) plain flour
2 pints(1.2 liters) hot meat or vegetable stock
salt and pepper to taste
2 tbsp (30ml) parsley, chopped
4 thick slices French bread
2 oz.(50g) cheese, grated

1. Place the onion and oil a bowl, mix well and cook on PL-Hi for 1 minutes.
2. Stir in the flour to make a paste and gradually add stock. Season and add the parsley.
3. Cover the bowl and cook on PL-70 for 16 minutes.
4. Pour the soup into serving bowls, submerge bread and sprinkle generously with cheese.
5. Cook on PL-70 for 2 minutes, until the cheese has melted.

STIR FRIED VEGETABLES

1 tbsp(15ml) sunflower oil
2 tbsp (30ml) soy sauce
1 tbsp (15ml) sherry
1"(2.5cm) root ginger, peeled and finely grated
2 medium carrots, cut into fine strips
4 oz.(100g) button mushrooms, chopped
2 oz.(50g) beansprouts
4 oz.(100g) mange-tout
1 red pepper, seeded and thinly sliced
4 spring onions, chopped
4 oz.(100g) canned water chestnuts, sliced
1/4 head of chinese leaves, thinly sliced

1. Place the oil, soy sauce, sherry, ginger, garlic and carrots in a large bowl, mix thoroughly
2. Cover and cook on PL-Hi for 3-5 minutes, stirring once.
3. Add the button mushrooms, beansprouts, mange-tout, red pepper, spring onions, water chestnuts and chinese leaves. Mix thoroughly.
4. Cook on PL-Hi for 5-6 minutes, until the vegetables are tender. Stir 2-3 times during cooking.

Stir fried vegetables are ideally served with meat or fish.

HONEYED CHICKEN

4 boneless chicken breasts
2 tbsp(30ml) clear honey
1 tbsp(15ml) whole grain mustard
1/2 tsp(2.5ml) dried tarragon
1 tbsp(15ml) tomato puree
1/4 pint(150ml) chicken stock

1. Place the chicken breasts in a casserole dish.
2. Mix all remaining ingredients together and pour over the chicken. Salt and pepper to taste.
3. Cook on PL-Hi for 13-14 minutes. Rearrange and coat the chicken with the sauce twice during cooking.

BLUE CHEESE & CHIVE JACKETS

2 baking potatoes,
(approx.9 oz.(250g) each)
2 oz.(50g) butter
4 oz.(100g) blue cheese, chopped
1 tbsp(15ml) fresh chives, chopped
2 oz.(50g) mushrooms, sliced
salt and pepper to taste

1. Prick each potato in several places. Cook on PL-Hi for 7-9 minutes. Halve and scoop the flesh into a bowl, add the butter, cheese, chives, mushrooms, salt and pepper, mix thoroughly.
2. Pile mixture into the potato skins and place in a flat dish.
3. Cook on PL-50 for 10 minutes.

WHITE SAUCE

1 oz.(25g) butter
1 oz.(25g) plain flour
1/2 pint(300ml) milk
salt and pepper to taste

1. Place the butter in a bowl and cook on PL-Hi for 30 seconds, until melted.
2. Stir in the flour and whisk in the milk. Cook on PL-Hi for 3-4 minutes, stirring every 2 minutes until thick and smooth. Season with salt and pepper to taste.

STRAWBERRY JAM

11/2 lb.(675g) strawberries, hulled
3 tbsp(45ml) lemon juice
11/2 lb.(675g) caster sugar

1. Place strawberries and lemon juice in a very large bowl, heat on PL-Hi for 4 minutes, or until the fruit has softened. Add sugar, mix well. Without covered.
2. Cook on PL-70 for 20-25 minutes, until setting point*is reached, stir every 4-5 minutes.
3. Pour into hot, clean jars. Cover, seal and label.

** setting point : To determine setting point, place 1 tsp(5ml) jam onto chilled saucer. Allow to stand for 1 minute. Move surface of jam gently with your finger, if the surface wrinkles setting point has been reached.*

PLAIN MICROWAVE CAKE

4 oz.(100g) margarine
4 oz.(100g) sugar
1 eggs
4 oz.(100g) self raising flour, sifted
2-3 tbsp(30-45ml) milk

1. Line the base of 8" (20.4cm) cake dish with grease-proof paper.
2. Cream the margarine and sugar together until light and fluffy. Beat in the eggs and fold in the sifted flour alternately with the milk.
3. Pour into prepared container. Cook on PL-Hi for 4-5 minutes, until a skewer comes out cleanly.
4. Leave the cake to stand for 5 minutes before turning out.

OMELETTE

1/2 oz.(15g) butter
4 eggs
6 tbsp(90ml) milk
salt & pepper

1. Whisk together eggs and milk.
2. Place butter in 10"(26cm) flan dish. Cook on PL-Hi for 30 seconds, until melted. Coat the dish with the melted butter.
3. Pour omelette mixture into flan dish. Cook on PL-Hi for 2 minutes. whisk mixture and cook again on PL-Hi for 1 minutes.

SCRAMBLED EGG

1/2 oz.(15g) butter
2 eggs
2 tbsp(30ml) milk
salt & pepper

1. Melt the butter in a bowl on PL-Hi for 30 seconds.
2. Add the eggs, milk and seasoning and mix well.
3. Cook on PL-Hi for 3 minutes, stirring every 30 seconds.

SAVORY MINCE

1 small onion, diced
1 clove garlic, crushed
1 tsp(5ml) oil
7 oz.(200g) can chopped tomatoes
1 tbsp(15ml) tomato puree
1 tsp(5ml) mixed herbs
8 oz.(225g) minced beef
salt and pepper

1. Place onion, garlic and oil in casserole, and cook on PL-Hi for 2 minutes or until soft.
2. Place all other ingredients in casserole. Stir well.
3. Cover and cook on PL-Hi for 5 minutes then PL-50 for 8-13 minutes or until the meat is cooked.

SHARP®

SHARP ELECTRONICS CORPORATION
100 Paragon Drive, Montvale, NJ 07645