Microwave Oven

INSTRUCTION MANUAL

MODEL:TM131MA5-PVH

Read these instructions carefully before using your microwave oven, and keep it carefully.
If you follow the instructions, your oven will provide you with many years of good service.

SAVE THESE INSTRUCTIONS CAREFULLY

PRECAUTIONS TO AVOID POSSIBLE EXPOSURE TO EXCESSIVE MICROWAVE ENERGY

(a) Do not attempt to operate this oven with the door open since open door operation can result in harmful exposure to microwave energy.
It is important not to defeat or tamper with the safety interlocks.

(b) Do not place any object between the oven front face and the door or allows soil or cleaner residue to accumulate on sealing surfaces.

(c) Do not operate the oven if it is damaged. It is particularly important that the oven door close properly and that there is no damage to the:

(1) DOOR (bent)

(2) HINGES AND LATCHES (broken or loosened)

(3) DOOR SEALS AND SEALING SURFACES

(d) The oven should not be adjusted or repaired by anyone except properly qualified service personnel.

Specifications

Model:	TM131MA5-PVH
Rated Voltage:	120V~ 60Hz
Rated Input Power(Microwave):	1550W
Rated Output Power(Microwave):	1100 W
Oven Capacity:	31 L
Turntable Diameter:	∅ 315 mm
External Dimensions:	512x422x306.5mm
Net Weight:	Approx. 11.6kg

IMPORTANT SAFETY INSTRUCTIONS

When using electrical appliances basic safety precautions should be followed, including the following:

WARNING - To reduce the risk of burns, electric shock, fire, injury to persons or exposure to excessive microwave energy:

1. Read all instructions before using the appliance.
2. Read and follow the specific: "PRECAUTIONS TO AVOID POSSIBLE EXPOSURE TO EXCESSIVE MICROWAVE ENERGY" found on page 2.
3. This appliance must be grounded. Connect only to properly grounded outlet. See "GROUNDING INSTRUCTIONS" found on page 4.
4. Install or locate this appliance only in accordance with the provided installation instructions.
5. Some products such as whole eggs and sealed containers - for example, closed glass jars - are able to explode and should not be heated in this oven.
6. Use this appliance only for its intended use as described in the manual. Do not use corrosive chemicals or vapors in this appliance. This type of oven is specifically designed to heat, cook or dry food. It is not designed for industrial or laboratory use.
7. As with any appliance, close supervision is necessary when used by children.
8. Do not operate this appliance if it has a damaged cord or plug, if it is not working properly, or if it has been damaged or dropped.
9. This appliance should be serviced only by qualified service personnel. Contact nearest authorized service facility for examination, repair, or adjustment.
10. Do not cover or block any openings on the appliance.
11. Do not store this appliance outdoors. Do not use this product near water - for example, near a kitchen sink, in a wet basement, near a swimming pool, or similar location.
12. Do not immerse cord or plug in water.
13. Keep cord away from heated surface.
14. Do not let cord hang over edge of table or counter.
15. When cleaning surfaces of door and oven that comes together on closing the door, use only mild, nonabrasive soaps, or detergent applied with a sponge or soft cloth.
16. To reduce the risk of fire in the oven cavity:
    1). Do not overcook food. Carefully attend appliance when paper, plastic, or other combustible materials are placed inside the oven to facilitate cooking.
    2). Remove wire twist-ties from paper or plastic bag before placing bag in oven.
    3). If material inside of the oven ignite, keep oven door closed, turn oven off, and disconnect the power cord, or shut off power at the fuse or circuit breaker panel.
    4). Do not use the cavity for storage purposes. Do not leave paper products, cooking utensils, or food in the cavity when not in use.
17. Liquids, such as water, coffee, or tea are able to be overheated beyond the boiling point without appearing to be boiling. Visible bubbling or boiling when the container is removed from the microwave oven is not always present.

This device complies with PRAT 18 of FCC rules.

THIS COULD RESULT IN VERY HOT LIQUID SUDDENLY BOILING OVER WHEN THE CONTAINER IS DISTURBED OR A UTENSIL IS INSERTED INTO THE LIQUID.

To reduce the risk of injury to persons:

1) Do not overheat the liquid.
2) Stir the liquid both before and halfway through heating it.
3) Do not use straight-sided containers with narrow necks.
4) After heating, allow the container to stand in the microwave oven for a short time before removing the container.
5) Use extreme care when inserting a spoon or other utensil into the container.

SAVE THESE INSTRUCTIONS

GROUNDING INSTRUCTIONS

This appliance must be grounded. In the event of an electrical short circuit, grounding reduces the risk of electric shock by providing an escape wire for the electric current. This appliance is equipped with a cord having a grounding wire with a grounding plug. The plug must be plugged into an outlet that is properly installed and grounded.

WARNING - Improper use of the grounding can result in a risk of electric shock.

Consult a qualified electrician or serviceman if the grounding instructions are not completely understood, or if doubt exists as to whether the appliance is properly grounded. If it is necessary to use an extension cord, use only a 3-wire extension cord that has a 3-blade grounded plug, and 3-slot receptacle that will accept the plug on the appliance. The marked rating of the extension cord shall be equal to or greater than the electrical rating of the appliance.

DANGER - Electric Shock Hazard
Touching some of the internal components can cause serious personal injury or death. Do not disassemble this appliance.

WARNING - Electric Shock Hazard
Improper use of the grounding can result in electric shock. Do not plug into an outlet until appliance is properly installed and grounded.

1. A short power-supply cord is provided to reduce the risks resulting from becoming entangled in or tripping over a longer cord.
2. Longer cord sets or extension cords are available and may be used if care is exercised in their use.
3. If a long cord or extension cord is used:
   1) The marked electrical rating of the cord set or extension cord should be at least as great as the electrical rating of the appliance.
   2) The extension cord must be a grounding-type 3-wire cord.
   3) The longer cord should be arranged so that it will not drape over the counter top or tabletop where it can be pulled on by children or tripped over unintentionally.

RADIO INTERFERENCE

1. Operation of the microwave oven may cause interference to your radio, TV or similar equipment.
2. When there is interference, it may be reduced or eliminated by taking the following measures:
   1) Clean door and sealing surface of the oven
   2) Reorient the receiving antenna of radio or television.
   3) Relocate the microwave oven with respect to the receiver.
   4) Move the microwave oven away from the receiver.
   5) Plug the microwave oven into a different outlet so that microwave oven and receiver are on different branch circuits.

UTENSILS

CAUTION - Personal Injury Hazard

Tightly-closed utensils could explode. Closed containers should be opened and plastic pouches should be pierced before cooking.

See the instructions on "Materials you can use in microwave oven or to be avoided in microwave oven."

There may be certain non-metallic utensils that are not safe to use for microwaving. If in doubt, you can test the utensil in question following the procedure below.

Utensil Test:

1. Fill a microwave-safe container with 1 cup of cold water (250ml) along with the utensil in question.
2. Cook on maximum power for 1 minute.
3. Carefully feel the utensil. If the empty utensil is warm, do not use it for microwave cooking.
4. Do not exceed 1 minute cooking time.

Materials you can use in microwave oven

Utensils	Remarks
Aluminum foil	Shielding only. Small smooth pieces can be used to cover thin parts of meat or poultry to prevent overcooking. Arcing can occur if foil is too close to oven walls. The foil should be at least 1 inch (2.5cm) away from oven walls.
Browning dish	Follow manufacturer* instructions. The bottom of browning dish must be at least 3/16 inch (5mm) above the turntable. Incorrect usage may cause the turntable to break.
Dinnerware	Microwave-safe only. Follow manufacturer's instructions. Do not use cracked or chipped dishes.
Glass jars	Always remove lid. Use only to heat food until just warm. Most glass jars are not heat resistant and may break.
Glassware	Heat-resistant oven glassware only. Make sure there is no metallic trim. Do not use cracked or chipped dishes.
Oven cooking bags	Follow manufacturer* instructions. Do not close with metal tie. Make slits to allow steam to escape.
Paper plates and cups	Use for short*erm cooking/warming only. Do not leave oven unattended while cooking.
Paper towels	Use to cover food for reheating and absorbing fat. Use with supervision for a short-term cooking only.
Parchment paper	Use as a cover to prevent splattering or a wrap for steaming.
Plastic	Microwave-safe only. Follow the manufacturer* instructions. Should be labeled "Microwave Safe". Some plastic containers soften, as the food inside gets hot. "Boiling bags" and tightly closed plastic bags should be slit, pierced or vented as directed by package.
Plastic wrap	Microwave-safe only. Use to cover food during cooking to retain moisture. Do not allow plastic wrap to touch food.
Thermometers	Microwave-safe only (meat and candy thermometers).
Wax paper	Use as a cover to prevent splattering and retain moisture.

Materials to be avoided in microwave oven

Utensils	Remarks
Aluminum tray	May cause arcing. Transfer food into microwave-safe dish.
Food carton with metal handle	May cause arcing. Transfer food into microwave-safe dish.
Metal or metal-trimmed utensils	Metal shields the food from microwave energy. Metal trim may cause arcing.
Metal twist ties	May cause arcing and could cause a fire in the oven.
Paper bags	May cause a fire in the oven.
Plastic foam	Plastic foam may melt or contaminate the liquid inside when exposed to high temperature.
Wood	Wood will dry out when used in the microwave oven and may split or crack.

SETTING UP YOUR OVEN

Names of Oven Parts and Accessories

Remove the oven and all materials from the carton and oven cavity.
Your oven comes with the following accessories:

Glass tray	1
Turntable ring assembly	1
Instruction Manual	1

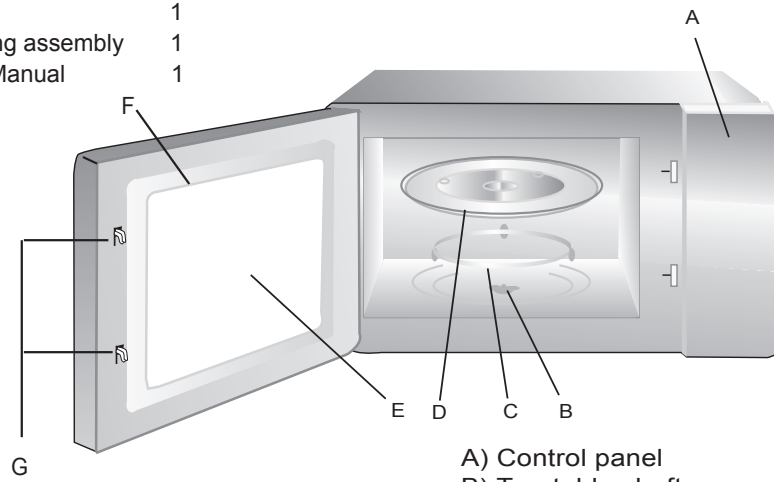

A) Control panel
B) Turntable shaft
C) Turntable ring assembly
D) Glass tray
E) Observation window
F) Door assembly
G) Safety interlock system

Turntable Installation

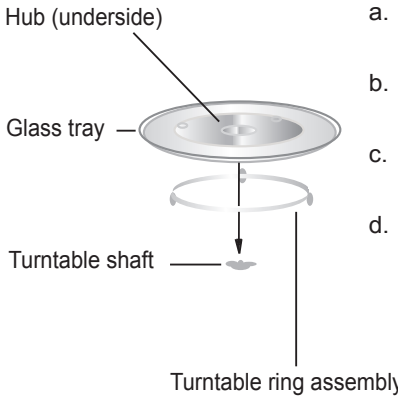

a. Never place the glass tray upside down. The glass tray should never be restricted.
b. Both glass tray and turntable ring assembly must always be used during cooking.
c. All food and containers of food are always placed on the glass tray for cooking.
d. If glass tray or turntable ring assembly cracks or breaks, contact your nearest authorized service center.

Countertop Installation

Remove all packing material and accessories. Examine the oven for any damage such as dents or broken door. Do not install if oven is damaged.

Cabinet: Remove any protective film found on the microwave oven cabinet surface. Do not remove the light brown Mica cover that is attached to the oven cavity to protect the magnetron.

Installation

1. Select a level surface that provide enough open space for the intake and/or outlet vents.

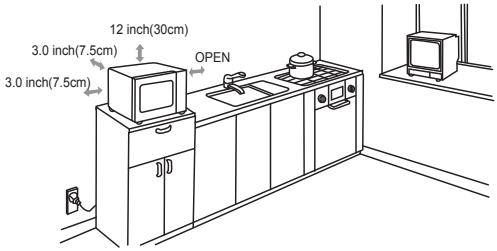

A minimum clearance of 3.0 inches (7.5cm) is required between the oven and any adjacent walls. One side must be open.

(1) Leave a minimum clearance of 12 inches (30cm) above the oven.

(2) Do not remove the legs from the bottom of the oven.

(3) Blocking the intake and/or outlet openings can damage the oven.

(4) Place the oven as far away from radios and TV as possible. Operation of microwave oven may cause interference to your radio or TV reception.

2. Plug your oven into a standard household outlet. Be sure the voltage and the frequency is the same as the voltage and the frequency on the rating label.

WARNING: Do not install oven over a range cooktop or other heat-producing appliance. If installed near or over a heat source, the oven could be damaged and the warranty would be void.

Control Panel and Features

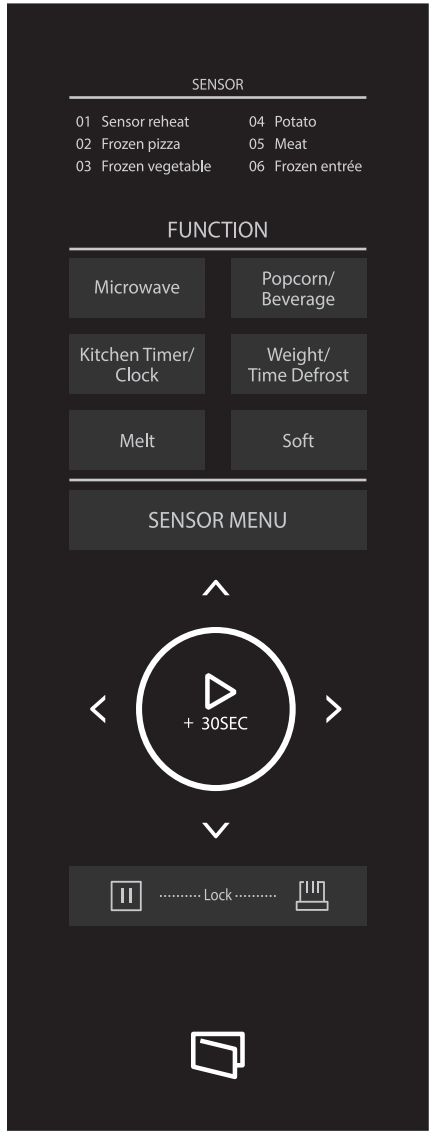

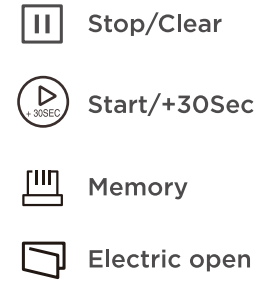

OPERATION INSTRUCTION

This microwave oven uses modern electronic control to adjust cooking parameters to meet your needs better for cooking.

1. Clock Setting

When the microwave oven is electrified, the screen will display "**WELCOME**", and the buzzer will ring once. If there is no operation within 1 minute, the oven will enter waiting state, and the screen will display "0:00".

1) Touch "**KITCHEN TIMER/CLOCK** " twice to set clock. The screen will display "0:00" and the hour figure will flash.

2) Touch " 〈 " or " 〉 " to adjust the hour figure, the input time should be within 0--12.

3) Touch " **START/+30SEC.** " to confirm the hour figures and the minute figures will flash.

4) Touch " 〈 " or " 〉 " to adjust the minute figures, the input time should be within 0--59.

5) Touch " **START/+30SEC.** " to finish clock setting.The screen will diaplay current time and ":" will flash.

Note: 1) If the clock is not set, the current time would not display when powered.

2) During the process of clock setting, if you do not press " **START/+30SEC.** " to confirm in 1 minute, the oven will go back to the previous status automatically.

2. Kitchen Timer

1) Touch "**KITCHEN TIMER/CLOCK** " once , the screen will display "KT 00:00".

2) Touch " ︿ ", " ﹀ ", " 〈 " or " 〉 " to set the time.
(The time setting should be 0:10- 95:00.)

3) Touch " **START/+30SEC.** " to confirm setting.

4) When the timer time arrives, the buzzer will ring 5 times.
If the clock has been set (12-hour system), the screen will display the current time.

Note: The kitchen timer is different from clock. Kitchen Timer is a timer.

3. Microwave Cooking

1) Touch the "**MICROWAVE** " key once, "M PL 10" will display on the screen.

2) Touch " **MICROWAVE**" repeafedly to select the microwave, power from PL10 to PL0. And "M PL 10", "M PL 9", "M PL 8"... "M PL 0" will display in order.

3) Touch " **START/+30SEC.** " to confirm the power level.

---

4) Touch " ︿ ", " ﹀ ", " 〈 " or " 〉 " to adjust the cooking time.
(The time setting should be 0:10- 95:00.)

---

5) Touch " **START/+30SEC.** " to start cooking.

4. Speeding Cook

1) In waiting state, touch "**START/+30SEC.**" to cook with 100% power level for 30 seconds. Each touch on the same key can increase 30 seconds. The maximum cooking time is 95 minutes.
2) During microwave cooking, time defrost and multi-stage cooking, each touch on " **START/+30SEC.**" key can increase 30 seconds for cooking time.

Note: this function cannot work under weight defrost and auto menu cooking.

5. Defrost by W.T.

1) Touch "**WEIGHT/TIME DEFROST**" key once, twice or three times, the oven will display "WEIGHT MEAT", "WEIGHT POULTRY"or "WEIGHT FISH".

---

2) Touch "**START/+30SEC.**" key to confirm weight defrost mode. The screen will display "WD-1", "WD-2" or "WD-3".

---

3) Touch " 〈 " or " 〉 " to select the weight of food. The weight of meat or fish should be 4-100 Oz. The weight of poultry should be 16-100 Oz.

---

4) Touch "**START/+30SEC.** " key to start defrosting.

6. Defrost by Time

1) Touch " **WEIGHT/TIME DEFROST** " key four times, the oven will display "TIME DEFROST" .

---

2) Touch "**START/+30SEC.**" key to confirm the function and the screen will display "TD 0:00".

---

3) Touch " ︿ ", " ﹀ ", " 〈 " or " 〉 " to select the defrosting time.
(The time setting should be 0:10- 95:00.)

---

4) Touch "**START/+30SEC.**" key to start defrosting.

Note: The default power is P30 and it cannot be changed.

7. Auto Menu

a.Popcorn/Beverage

1) In waiting state, touch " **POPCORN/BEVERAGE**" to choose popcorn or beverage.

2) Touch " **START/+30SEC.** " to confirm the menu you choose.

3) Touch " 〈 " or " 〉" to choose the weight of menu.

4) Touch " **START/+30SEC.** " to start cooking.

b.Melt

1) In waiting state, touch " **MELT** " repeatedly to choose menu . And " BUTTER ", " CHOCOLATE " and " CHEESE " will display in order.

2) Touch " **START/+30SEC.** " to confirm the menu you choose.

3) Touch " 〈 " or " 〉" to choose the weight of menu.

4) Touch " **START/+30SEC.** " to start cooking.

c.Soft

1) In waiting state, touch " **SOFT** " repeatedly to choose menu . And " BUTTER " and " ICE CREAM " will display in order.

2) Touch " **START/+30SEC.** " to confirm the menu you choose.

3) Touch " 〈 " or " 〉" to choose the weight of menu.

4) Touch " **START/+30SEC.** " to start cooking.

Auto Menu

Menu	Sort	Weight
Popcorn	Popcorn	1.75 Oz
		3.0 Oz
		3.5 Oz
Beverage	Beverage	1cup(120ml)
		2cup(240ml)
		3cup(360ml)
Melt	Butter	1 stich(8 Oz)
		2 stich
		3 stich
	Chocolate	4 Oz
		8 Oz
	Cheese	4 Oz
		8 Oz
Soft	Butter	1 stich
		2 stich
		3 stich
	Ice cream	8 Oz
		16 Oz

8. Sensor Menu

1) In waiting state, touch " **SENSOR MENU** " key repeatedly, the screen will display "SENSOR REHEAT", "FROZEN PIZZA", "FROZEN VEGETABLE", "POTATO", "MEAT", "FROZEN ENTREE" in order.

---

2) Touch " **START/+30SEC.** " to start cooking.

Note:

1)When cooking or reheating food, you should do these in order to have the best effect.

a.The room temperature cannot be over 35 degrees.

b.The weight of food must be more than 110g (4 Oz).

c.The cavity,glass tray and utensils must kept drying before putting the food in.

d.The reheat food can be covered with the lid.But the lid must has venthole in order to emanate the steam.Sealed utensil is forbidden.

2) During cooking process, following points must be done.

a.Keep the door close when the surplus time not displays or the buzzer does not sound twice.

b.When the buzzer sound twice , the time will count down and display the suplus time, you can open the door to mix the food up ,turn over or replace the food. And then go on the next operation.

3) Please leave the food alone for a while after cooking have been finished.

4) During sensor cooking process, if the time not count down,please do not open the oven door or press " **STOP/CLEAR** " key. Otherwise,the sensor will make mistakes.

Sensor Reheat Menu

1) In waiting state, put the food(cooked dinner plate) into the microwave oven. Press "SENSOR MENU" once, the screen will display "SENSOR REHEAT".

2) Press "START/+30SEC" to start sensor reheat function and no need to set time.

3)The sensor will sound twice when the steaming was be emanated.The surplus time will displays, the buzzer will sound 5 beeps when finishing. The screen will display "END".

Note:1) Food to be avoided in sensor reheating.

a.Bread and other dry food, such as biscuit,cake.

b.For raw or uncooked foods.

c.Beverage and frozen food.

2)The oven cannot cook automatically when the temperature of the oven cavity is high.

3)The reheat food can be covered with the lid.But the lid must has venthole in order to emanate the steam. Sealed utensil is forbidden.

4) During sensor cooking process, please do not open the oven door or press " **STOP/CLEAR** " key. Otherwise,the sensor will make mistakes.

5)The sensor reheat has different request for different food.

Casseroles- Add 3 to 4 tablespoons of water, cover with lid or vented plastic wrap. Stir when time appears in the display window.

Canned foods-Empty contents into casserole dish or serving bowl,cover dish with lid or vented plastic wrap. After reheating, let stand for a few minutes.

Plate of food- Arranged food on plate; top with butter, gravy,etc. Cover with lid or vented plastic wrap. After reheating, let stand for a few minutes.

Sensor Cook Chart

Menu	Weight	Inicial Temp.	Additional Instructions
Sensor Reheat	8~12 Oz	5 degrees	Reheat food is dinner plate. When sensor time finish, Cooking time counts down.Now you can mix it and then continue reheating.
Frozen Pizza	6~12 Oz	minus 18 degrees	The menu is used for cooking raw frozen pizza. If the weight is over 12 OZ,please set the additional cooking time manually.
Frozen Vegetable	6~16Oz	minus 18 degrees	Wash thoroughly, add 15ml water per 4Oz vegetables, and cover with a lid or vented plastic wrap.
Potato	1~4 Units (6~8Oz each one)	Room Temp.	Pierce each potato with a fork 6 times around it's surface. Place potatoes around the edge of a paper-towel-lined turntable. Do not cover. If additional time is needed, continue to cook manually. Please let stand for 5 minutes in the oven after finishing to avoid burning.
Meat	8~24 Oz	5 degrees	Stir the minced meat before cooking. Cover with lid or vented plastic wrap. When buzzer sound twice, cooking time counts down. Press " **STOP/CLEAR** " to pause and open the oven door to mix.
Frozen entree	8~32 Oz	minus 18 degrees	Be careful when removing the film cover after cooking. Remove Facing away from you to avoid steam burns. If additional time is needed, continue to cook manually. Cover the film before cooking and leave a spacing near the edge of the container in order to let the steam out. When buzzer sound twice, cooking time counts down. Press " **STOP/CLEAR** " to pause and open the oven door to mix.

9.Multi-Stage Cooking

Two stages can be maximumly set.If one stage is defrosting, it shouldbe put in the first stage. The buzzer will ring once after each stage and the next stage will begin.
Note: Auto menu cooking cannot be set as one of the multi-stage.

Example: if you want to defrost the food for 5 minutes, then to cook with 80% microwave power for 7 minutes. The steps are as following:

1) Touch " **WEIGHT/TIME DEFROST** " key 4 times, the screen will display "TIME DEFROST".

2) Touch "**START/+30SEC.**" key to confirm the function.

3) Touch " ︿ ", " ﹀", " 〈 " or " 〉" to adjust the defrost time of 5 minutes.

4) Touch " **MICROWAVE** " 3 times to choose 80% microwave power.

5) Touch " **START/+30SEC.**" to confirm the microwave power.

6) Touch " ︿ ", " ﹀", " 〈 " or " 〉" to adjust the cooking time of 7 minutes.

7) Touch " **START/+30SEC.**" to start cooking.

10. Memory Function

1) In waiting state,press " **MEMORY** " to choose memory 1-3 procedure. The screen will display " MEMORY1","MENORY2" and "MEMORY3".

2) If the procedure has been set, press " **START/+30SEC.**" to use it. If not, continue to set the procedure. Only one or two stages can be set.

3) After finishing the setting, if press " **MEMORY** ", it will save the procedure and go back to waiting state; If press " **START/+30SEC.** " , it will save the procedure and start working.

Example: To set the following procedure as the second memory, that is memory 2.
To cook the food with 80% microwave power for 3minutes and 20 seconds.
The steps are as follow:

a. In waiting state, press " **MEMORY** " twice, stop pressing until the screen displays "MEMORY 2".

b. Press " **MICROWAVE** " 3 times, " M PL 8" display.

c. Press " **START/+30SEC.** " to confirm power.

d. Touch " ︿ ", " ﹀", " 〈 " or " 〉" to adjust the cooking time of 3 minutes and 20 seconds.

e. Press " **MEMORY** " to save the setting and buzzer will ring once.

Note:(1)Weight defrost or Auto menu cooking cannot be set as memory procedure.

(2)If the electricity is not cut off , the procedure will bu saved all the time. If it is, the procedure need to be reset.

11. Inquiring Function

1) In microwave cooking state, touch " **MICROWAVE**" to check the current power .

2) During cooking state, touch "**CLOCK** " to check the current time. If the clock has been set, It will be displayed for 3 seconds.

12. Lock-out Function for Children

Lock: In waiting state, touch " **STOP/CLEAR** " for 3 seconds, there will be a long "beep" denoting entering into the children-lock state. The current time or "LOCKED" will display.
Lock quitting: In locked state, touch "**STOP/CLEAR** " for 3 seconds, there will be a long "beep" denoting that the lock is released.

13. Specification

1) Once the cooking programme has been set, "**START/+30SEC.**" is not pressed in 1 minute. The current time will be displayed. The setting will be cancelled.

2) The buzzer sounds once by efficient press, inefficient press will be no responce.

3) when cooking finish, buzzer will ring 5 times and the screen will display "END".

14. Open The Door

In waiting state or working state, press " **ELECTRIC OPEN**" key to open the door automatically.

MAINTENANCE

Troubleshooting

Check your problem by using the chart below and try the solutions for each problem. If the microwave oven still does not work properly, contact the nearest authorized service center.

TROUBLE	POSSIBLE CAUSE	POSSIBLE REMEDY
Oven will not start	a. Electrical cord for oven is not plugged in. b. Door is open. c. Wrong operation is set.	a. Plug into the outlet. b. Close the door and try again. c. Check instructions.
Arcing or sparking	a. Materials to be avoided in microwave oven were used. b. The oven is operated when empty. c. Spilled food remains in the cavity.	a. Use microwave-safe cookware only. b. Do not operate with oven empty. c. Clean cavity with wet towel.
Unevenly cooked foods	a. Materials to be avoided in microwave oven were used. b. Food is not defrosted completely. c. Cooking time, power level is not suitable. d. Food is not turned or stirred.	a. Use microwave-safe cookware only. b. Completely defrost food. c. Use correct cooking time, power level. d. Turn or stir food.
Overcooked foods	Cooking time, power level is not suitable.	Use correct cooking time, power level.
Undercooked foods	a. Materials to be avoided in microwave oven were used. b. Food is not defrosted completely. c. Oven ventilation ports are restricted. d. Cooking time, power level is not suitable.	a. Use microwave-safe cookware only. b. Completely defrost food. c. Check to see that oven ventilation ports are not restricted. d. Use correct cooking time, power level.
Improper defrosting	a. Materials to be avoided in microwave oven were used. b. Cooking time, power level is not suitable. c. Food is not turned or stirred.	a. Use microwave-safe cookware only. b. Use correct cooking time, power level. c. Turn or stir food.

PN: