MICROWAVE SOLO OVEN INSTRUCTION MANUAL ML-EM45PIT(SS)

TOSHIBA

CONTENTS

PRODUCT SAFETY

IMPORTANT SAFETY INSTRUCTIONS EN-2

PRODUCT INTRODUCTION

PRECAUTIONS MICROWAVE ENERGY EN-5
GROUNDING INSTRUCTIONS EN-6
MATERIALS YOU CAN USE IN MICROWAVE OVEN EN-9
MATERIALS CAN NOT BE USED IN MICROWAVE OVEN EN-10

INSTRUCTION FOR USE

SETTING UP YOUR OVEN EN-11
OPERATION EN-14
1. POWER LEVELS EN-15
2. CLOCK SETTING EN-15
3. KITCHEN TIMER EN-15
4. MICROWAVE COOK EN-16
5. ONE TOUCH START EN-16
6. WEIGHT DEFROST FUNCTION EN-17
7. TIME DEFROST EN-17
8. POPCORN EN-17
9. SENSOR COOKING EN-18
10. MEMORY FUNCTION EN-20
11. MUTI-STAGE COOKING EN-21
12. TURN ON/OFF THE BUZZER SOUND EN-21
13. ENERGY SAVER MODE EN-22
14. LOCK FUNCTION FOR CHILDREN EN-22
15. INQUIRING FUNCTION EN-22
16. COOKING END REMINDING FUNCTION EN-22

MAINTENANCE

TROUBLESHOOTING EN-23
ONE YEAR LIMITED WARRANTY EN-25

NOTE

BEFORE OPERATING THIS PRODUCT,
READ, UNDERSTAND, AND FOLLOW THESE INSTRUCTIONS.
BE SURE TO SAVE THIS BOOKLIST FOR FUTURE REFERENCE

IMPORTANT SAFETY INSTRUCTIONS

SAFETY WARNING

To reduce the risk of burns, electric shock, fire, injury to persons or exposure to excessive microwave oven energy when using your appliance, follow basic safety precautions, including the following:

1. Read all instructions before using the appliance.
2. Read and follow the specific: " PRECAUTIONS TO AVOID POSSIBLE EXPOSURE TO EXCESSIVE MICROWAVE ENERGY" found on EN-5.
3. As with most cooking appliances, close supervision is necessary to reduce the risk of a fire in the oven cavity.
4. To reduce the risk of fire in the oven cavity:
   a. Do not overcook food. Carefully attend the appliance when paper, plastic, or other combustible materials are placed inside the oven to facilitate cooking.

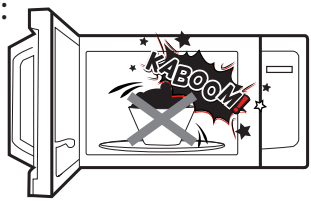

   b. Remove wire twist-ties and metal handles from paper or plastic containers/ bags before placing them in the oven.
   c. If materials inside the oven ignite, keep the oven door closed. Turn the oven off, and unplug the appliance. Disconnect the power cord, shut off power at the fuse or circuit breaker panel.
   d. Do not use the cavity for storage purposes. Do not leave paper products, cooking utensils, or food in the cavity when not in use.
5. This oven must be grounded. Connect only to properly grounded outlet. See "GROUNDING INSTRUCTIONS" found on EN-6.
6. Install or locate this oven only in accordance with the installation instructions provided.

IMPORTANT SAFETY INSTRUCTIONS

SAFETY WARNING

7. Some products such as whole eggs and sealed containers-for example, closed glass jars-are able to explode and should not be heated in the oven.
8. Use this appliance only for its intended uses as described in this manual. Do not use corrosive chemicals or vapors in this appliance. This oven is specifically designed to heat or cook or dry food. It is not designed for industrial or laboratory use.
9. As with any appliance, close supervision is necessary when used by children
10. Do not operate this oven if it has a damaged cord or plug, if it is not working properly or if it has been damaged or dropped.
11. This microwave should be serviced only by qualified service personnel.
    Contact nearest authorized service facility for examination, repair or adjustment.
12. Do not cover or block any openings on the oven.
13. Do not store or use this appliance outdoors.
14. Do not use this oven near water, for example, near a kitchen sink, in a wetbasement, near a swimming pool, or similar locations.
15. Do not immerse cord or plug in water.
16. Keep cord away from heated surfaces.
17. Do not let cord hang over edge of table or counter.
18. When cleaning surfaces of door and oven that comes together on closing the door, use only mild, nonabrasive soaps or detergents applied with a sponge of soft cloth.
19. This appliance is for private household use only.

IMPORTANT SAFETY INSTRUCTIONS

SAFETY WARNING

20. Liquids, such as water, coffee, or tea are able to be overheated beyond the boiling point without appearing to be boiling. Visible bubbling or boiling when the container is removed from the microwave oven is not always present. THIS COULD RESULT IN VERY HOT LIQUIDS SUDDENLY BOILING OVER WHEN THE CONTAINER IS DISTURBED OR A SPOON OR OTHER UTENSIL IS INSERTED INTO THE LIQUID.
    a. Do not overheat the liquid.
    b. Stir the liquid both before and halfway through heating it.
    c. Do not use straight-sided containers with narrow necks.
    d. After heating, allow the container to stand in the microwave oven for a short time before removing the container.
    e. Use extreme care when inserting a spoon or other utensil into the container.

SAVE THESE INSTRUCTIONS

PRECAUTIONS TO AVOID POSSIBLE EXPOSURE TO EXCESSIVE MICROWAVE ENERGY

1. Do not attempt to operate this oven with the door open since this can result in harmful exposure to microwave energy. It is important not to defeat or tamper with the safety interlocks.

2. Do not place any object between the oven front face and the door or allow soil or cleaner residue to accumulate on sealing surfaces.

3. Do not operate the oven if it is damaged. It is particularly important that the oven door closes properly and that there is no damage to the:
   a. DOOR (bent)
   b. HINGES AND LATCHES (broken or loosened)
   c. DOOR SEALS AND SEALING SURFACE

4. The oven should not be adjusted or reparied by anyone except properly qualified service personnel.

SPECIFICATIONS

Model:	ML-EM45PIT(SS)
Rated Voltage:	120V~ 60Hz
Rated Input Power(Microwave):	1350W
Rated Output Power(Microwave):	1250W
Oven Capacity:	1.6 cu.ft.
Turntable Diameter:	Φ 13.6 inch
External Dimensions:	21.77X19.20X12.99 inch
Net Weight:	Approx. 28.7 lbs

GROUNDING INSTRUCTIONS

DANGER
Electric Shock Hazard
Touching some of the internal components can cause serious personal injury or death.
Do not disassemble this appliance.

This appliance must be grounded. In the event of an electrical short circuit, grounding reduces the risk of electric shock by providing an escape wire for the electric current. To protect against electrical shock, this appliance is equipped with a cord having a 3 prong grounding-type plug for insertion into a proper grounding-type receptacle. DO NOT alter the plug for use in a 2-prong receptacle. If the plug will not fit into a receptacle, have the proper receptacle installed by a qualified electrician.

CAUTION:
Do not insert your fingers into any gaps or holes; it may cause injuries.

WARNING:
Improper use of the grounding can result in a risk of electric shock

Three-pronged (grounding) plug

GROUNDING INSTRUCTIONS

Consult a qualified electrician or serviceman if the grounding instructions are not completely understood or if doubt exists as to whether the appliance is properly grounded. If it is necessary to use an extension cord, use only a 3-wire extension cord that has a 3-pronged grounding plug , and a 3-slot receptacle that will accept the plug on the appliance.The marked rating of the extension cord shall be equal to or greater than the electrical rating of the appliance.

1. A short power-supply cord is provided to reduce the risks resulting from becoming entangled in or tripping over a longer cord.
2. Longer cord sets or extension cords are available and may be used if care is exercised in their use.
3. If a long cord sets or extension cord is used:
   a. The marked electrical rating of the cord set or extension marked electrial rating of the cord set or extension cord should be at least as great as the electrical rating of the appliance.

b. The extension cord must be a grounding -type 3-wire cord.

c. The longer cord should be arranged so that it will not drape over the countertop or tabletop where it can be pulled on by children or tripped over unintentionally.

RADIO INTERFERENCE

Operation of the microwave oven may cause interference to your radio, TV or similar equipment.

When there is interference, it may be reduced or eliminated by taking the following measures:

a. Clean door and sealing surface of the oven.

b. Reorient the receiving antenna of radio or television.

c. Relocate the microwave oven with respect to the receiver.

d. Move the microwave oven away from the receiver.

e. Plug the microwave oven into a different outlet so that microwave oven and receiver are on different branch circuits.

GROUNDING INSTRUCTIONS

UTENSILS
CAUTION
Electric Shock Hazard
Tightly-closed utensils could explode. Closed containers should be opened and plastic pouches should be pierced before cooking.
See the instructions on "Materials you can use in microwave oven or to be avoided in microwave oven.". There may be certain non-metallic utensils that are not safe to use for microwaving. If in doubt, you can test the utensil in question following the procedure below.

SAVE THESE INSTRUCTIONS
HOUSEHOLD INDOOR USE ONLY

UTENSIL TEST:
1. Fill a microwave-safe container with 1 cup of cold water (250ml) along with the utensil in question.
2. Cook on maximum power for 1 minute.
3. Carefully feel the utensil. If the empty utensil is warm, do not use it for microwave cooking.
4. Do not exceed 1 minute cooking time.

MATERIALS YOU CAN USE IN MICROWAVE OVEN

UTENSILS	REMARKS	
Browning dish	Follow manufacturer's instructions.The bottom of browning dish must be at least 3/16 inch (5mm) above the turntable. Incorrect usage may cause the turntable to break.	✓
Dinnerware	Microwave-safe only. Follow manufacturer's instructions.**Do not use cracked or chipped dishes.**	✓
Glass jars	Always remove lid. **Use only to heat food until just warm.** Most glass jars are not heat resistant and may break.	✓
Glassware	**Heat-resistant oven glassware only.** Make sure there is no metallic trim. **Do not use cracked or chipped dishes.**	✓
Oven cooking bags	Follow manufacturer's instructions. **Do not close with metal tie.** Make slits to allow steam to escape.	✓
Paper plates and cups	Use for **short–term cooking/warming only.** Do not leave oven unattended while cooking.	✓
Paper towels	Use to cover food for reheating and absorbing fat. Use with supervision for a **short-term cooking only.**	✓
Parchment paper	Use as a cover to prevent splattering or a wrap for steaming.	✓
Plastic	Microwave-safe only. Follow the manufacturer's instructions. Should be labeled "Microwave Safe". Some plastic containers soften, as the food inside gets hot. "Boiling bags" and tightly closed plastic bags should be slit, pierced or vented as directed by package.	✓
Plastic wrap	Microwave-safe only. Use to cover food during cooking to retain moisture. Do not allow plastic wrap to touch food.	✓
Thermometers	Microwave-safe only (meat and candy thermometers).	✓
Wax paper	Use as a cover to prevent splattering and retain moisture.	✓

MATERIALS TO BE AVOIDED IN MICROWAVE OVEN

UTENSILS	REMARKS	
Aluminum tray	May cause arcing. Transfer food into microwave-safe dish.	✕
Food carton with metal handle	May cause arcing. Transfer food into microwave-safe dish.	✕
Metal or metal-trimmed utensils	Metal shields the food from microwave energy. Metal trim may cause arcing.	✕
Metal twist ties	May cause arcing and could cause a fire in the oven.	✕
Paper bags	May cause a fire in the oven.	✕
Plastic foam	Plastic foam may melt or contaminate the liquid inside when exposed to high temperature.	✕
Wood	Wood will dry out when used in the microwave oven and may split or crack.	✕

SETTING UP YOUR OVEN

NAMES OF OVEN PARTS AND ACCESSORIES

Remove the oven and all materials from the carton and oven cavity.
Your oven comes with the following accessories:

Glass tray 1
Turntable ring assembly 1
Instruction Manual 1

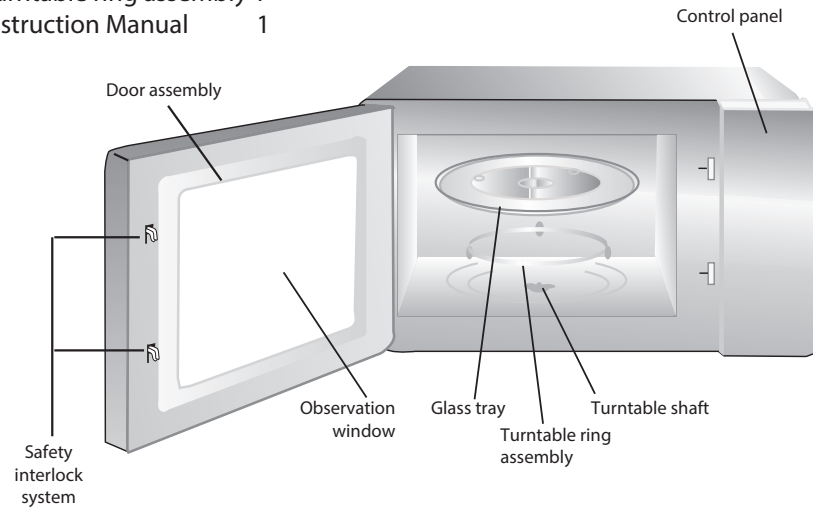

Turntable Installation

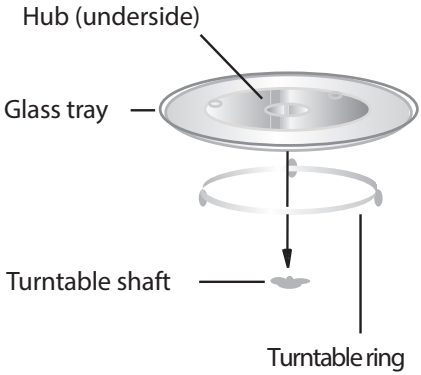

a. Never place the glass tray upside down. The glass tray should never be restricted.
b. Both glass tray and turntable ring must always be used during cooking.
c. All food and containers of food are always placed on the glass tray for cooking.

SETTING UP YOUR OVEN

COUNTERTOP INSTALLATION

Remove all packing material and accessories. Examine the oven for any damage such as dents or broken door. Do not install if oven is damaged.

Cabinet: Remove any protective film found on the microwave oven cabinet surface. Do not remove the light brown Mica cover that is attached to the oven cavity to protect the magnetron.

INSTALLATION

1. Select a level surface that provide enough open space for the intake and/or outlet vents.

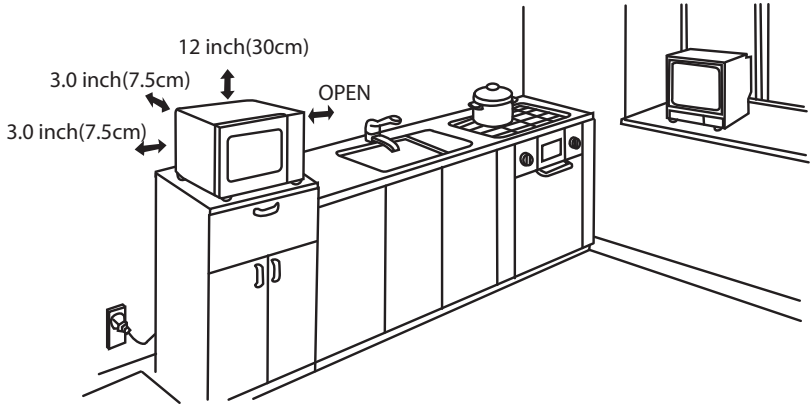

A minimum clearance of 3.0 inches (7.5cm) is required between the oven and any adjacent walls. One side must be open.

(1) Leave a minimum clearance of 12 inches (30cm) above the oven.

(2) Do not remove the legs from the bottom of the oven.

(3) Blocking the intake and/or outlet openings can damage the oven.

(4) Place the oven as far away from radios and TV as possible.
Operation of microwave oven may cause interference to your radio or TV reception.

SETTING UP YOUR OVEN

INSTALLATION

2. Plug your oven into a standard household outlet. Be sure the voltage and the frequency is the same as the voltage and the frequency on the rating label.

⚠ **WARNING**	Do not install oven over a range cooktop or other heat-producing appliance. If installed near or over a heat source, the oven could be damaged and the warranty would be void.

The accessible surface may be hot during operation.

OPERATION

COUNTERTOP INSTALLATION

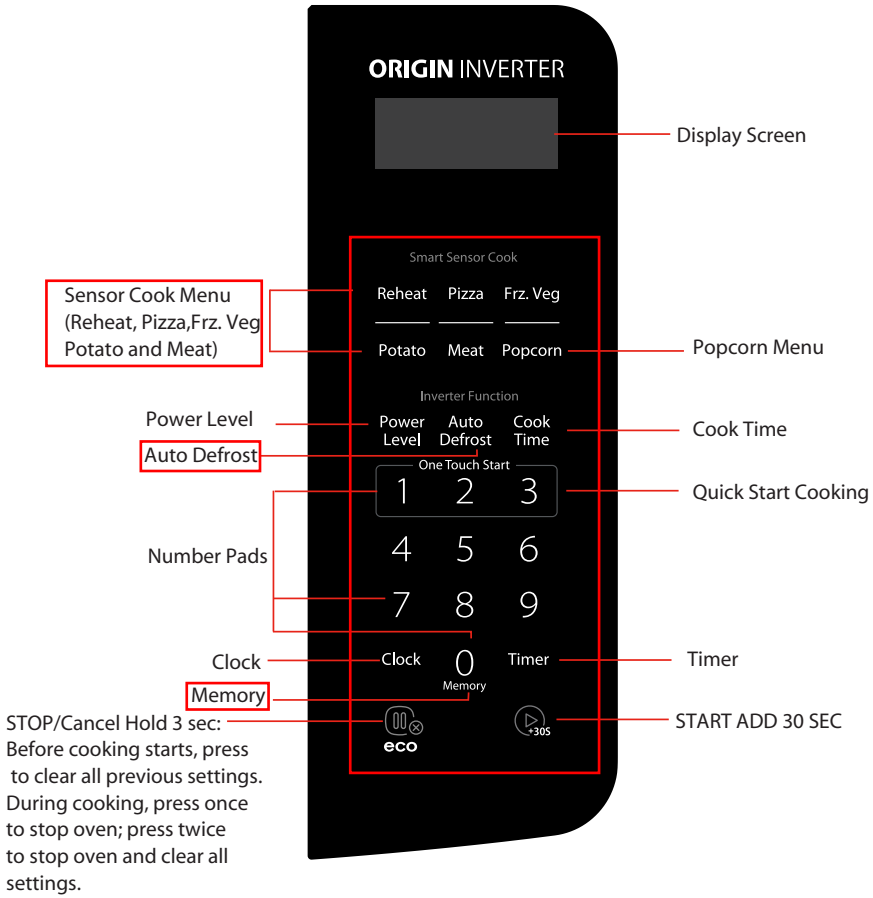

OPERATION

1. POWER LEVELS

Ten power levels are available.

Prior to cooking, press Power Level and "PL10" will display. Then press number pads to select a different power level. Please refer to page 16 "MICROWAVE COOK" for detailed power level setting.

Level	10	9	8	7	6	5	4	3	2	1
Power	100%	90%	80%	70%	60%	50%	40%	30%	20%	10%
Display	PL10	PL9	PL8	PL7	PL6	PL5	PL4	PL3	PL2	PL1

2. CLOCK SETTING

When the microwave oven is plugged into an outlet, "0:00" will display.

a. Press Clock once, "00:00" will appear in the display.
b. Press the number pads to enter the current clock time. For example, if the time is now 10:12, press " 1, 0, 1, 2 " in order.
c. Press Clock to finish clock setting, " : " will flash and the numbers will appear as a clock time in the display.

NOTE

- If the numbers entered are not within the range between 1:00 to 12:59, the setting will not be accepted until valid numbers are entered.
- In the process of setting clock, if the pad is pressed or if there is no operation within 1 minute, the display will automatically return to the previous clock setting.

3. KITCHEN TIMER

a. Press Timer once, "00:00" will appear in the display.
b. Press the number pads to enter the time amount. The maximum amount of time that can be entered is 99 minutes, 99 seconds.
c. Press +30S to confirm setting, and the timer will start to count down.
d. When the time arrives,the oven will beep 5 times.

OPERATION

NOTE	• The Kitchen Timer setting is different from the Clock setting; it is simply a timer. • During the Kitchen Timer function, no cooking function can be set into operation. • Kitchen Timer amount cannot be increased by pressing +30S . • Press will cancel the Timer countdown.

4. MICROWAVE COOK

a. Press Cook Time , "00:00" will appear in the display.

b. Press number pads to enter the cooking time. The maximum cooking time is 99 minutes,99 seconds.

c. Press Power Level, PL10 will flash. Press number pads 0 through 9 to select a different power level if desired. See the POWER LEVEL table above.

d. Press +30S to start cooking. The remaining cooking time will display.

Example : To cook the food with 50% microwave power for 15 minutes.

- Press Cook Time , "00:00" will display.
- Press "1, 5, 0, 0" in order for 15:00 to appear in the display.
- Press Power Level once , then press "5" to select 50% microwave power.
- Press +30S to start cooking. Buzzer sounds once. The remaining cooking time will display.

NOTE	In the process of setting, if the pad is pressed or if there is no operation within 1 minute, the oven will automatically return to display the clock.

5. ONE TOUCH START

a. Instant cooking at 100% power level and 1 to 3 minutes cooking time can be started by pressing number pads 1 to 3. Press +30S to increase the cooking time by 30 seconds with each press. The maximum cooking time is 99 minutes, 99 seconds.

b. Instant cooking at 100% power level and 30 seconds cooking time can be started by pressing +30S. Each repeated press will increase cooking time by 30 seconds. The maximum cooking time is 99 minutes, 99 seconds.

OPERATION

NOTE	• Time can also be added in 30 second increments by pressing (+30S) during Microwave Cooking, Time Defrost and Multi-stage Cooking. • Time cannot be added by pressing (+30S) during Weight Defrost and Kitchen Timer functions.

6. WEIGHT DEFROST FUNCTION

a. Press Auto Defrost once,"WEIGHT" will display.
b. Press number pads to input weight to be defrosted.
Input the weight range between 0.1 to 6.0 lbs.
c. If the weight input is not between 0.1 to 6.0lbs, the input will be invalid. A beep will sound and the unit will not work until valid numbers are entered.
d. Press (+30S) to start defrosting and the cooking time remaining will be displayed.

7. TIME DEFROST

a. Press Auto Defrost twice , "TIME" will appear in the display.
b. Press the number pads to input the defrost time. The time arrange is 00:01-99:99.
c. The default microwave power is power level 3.
d. Press (+30S) to start defro cooking. And the remaining defrost time will display.

8. POPCORN

a. Press Popcorn , "1.75" will appear in the display.
b. Press Popcorn two more times to choose the weight, "3.0" and "3.5" will display in order.
c. Press (+30S) to cook. The remaining time will display. Oven beeps 5 times when cooking finish.

OPERATION

9. Sensor Cooking

a. In waiting state, press the relevant menu key in the sensor cook, put the food in the oven. " REHEAT" ," PIZZA"," FRZ. VEG" POTATO" and "MEAT" will display twice in turn .The " " and the " " will be lighted.

b. Press " +30S " to start sensor reheat function and no need to set time. The " " and the " " will flash. If the sensor receive the humidity signal, the buzzer will sound 2 beeps, and the remaining time will display. Or the screen will show "S-01"、 "S-02"…"S-05".

NOTE

- When cooking or reheating food, you should do these in order to have the best effect.
  a. The room temperature cannot be over 35 degrees.
  b. The weight of food must be more than 110g (4 Oz).
  c. The cavity, glass tray and utensils must kept drying before putting the food in.
  d. The reheat food can be covered with the lid. But the lid must has vent hole in order to emanate the steam. Sealed utensil is forbidden.
  e. If the cavity is too hot, the sensor cook can not be started.
- During cooking process, following points must be done.
  a. Keep the door close when the remaining time is not displays or the buzzer does not sound twice.
  b. When the buzzer sound twice , the time will count down and display the rem ing time, you can open the door to mix the food up , turn over or replace the food. And then go on the next operation.
- Please leave the food alone for a while after cooking have been finished.
- During sensor cooking process, if the time not count down, please do not open the oven door or press " " key. Otherwise, the sensor will make mistakes.
- After 35 seconds sensor cooking, the buzzer sound 1 beep to start self-checking. If the sensor do not work, the oven will go back to waiting state after 40seconds.

OPERATION

Sensor Cook Chart

Menu	Weight	Inicial Temp.	Additional Instructions
S-01 Reheat	8~12 Oz	5 degrees	Reheat food is dinner plate. When sensor time finish, Cooking time counts down.Now you can mix it and then continue reheating.
S-02 Pizza	6~12 Oz (170~340g)	minus 18 degrees	If the weight is over 12 OZ,please set the additional cooking time manually.
S-03 Frz. Veg	4~16Oz (110~450g)	Room Temp.	All pieces should be the same size. Wash thoroughly, add 15ml water per 125g vegetables, and cover with a lid or vented plastic wrap. When cooking time counts down. Press " STOP/CANCEL " to pause and open the oven door to mix and then continue to cook.
S-04 Potato	1~4 Units (6~8Oz each one)	Room Temp.	Pierce each potato with a fork 6 times around it's surface. Place potatoes around the edge of a paper-towel-lined turntable. Do not cover. If additional time is needed, continue to cook manually. Please let stand for 5 minutes in the oven after finishing to avoid burning.
S-05 Meat	8~24 Oz (225~680g)	5 degrees	Break apart in glass bowl or colander. Cover with lid or vented plastic wrap. Juices should be clear when done, Drain.When cooking time counts down. Press "STOP/CANCEL" to pause and open the oven door to mix and then continue to cook.

Sensor Reheat Menu

a. In waiting states, and put the food into the microwave oven. Press "REHEAT" "S-01" is displayed.

b. Press " ▷ +30S " to start sensor reheat function and no need to set time.

c. The sensor will sound twice when the steaming was be emanated.The surplus time will displays, the buzzer will sound 5 beeps when finishing and the oven will turn back to the waiting states.

OPERATION

NOTE	• Food to be avoided in sensor reheating. a. Bread and other dry food, such as biscuit,cake. b. For raw or uncooked foods. c. Beverage and frozen food. • The oven cannot cook automatically when the temperature of the oven cavity is high. • The reheat food can be covered with the lid.And the lid must has venthole in order to emanate the steam. Sealed utensil is forbidden. • During sensor cooking process, please do not open the oven door or press " " key. Otherwise,the sensor will make mistakes. • The sensor reheat has different request for different food. Casseroles- Add 3 to 4 tablespoons of water, cover with lid or vented plastic wrap. Stir when time appears in the display window. Canned foods-Empty contents into casserole dish or serving bowl, cover dish with lid or vented plastic wrap. After reheating, let stand for a few minut Plate of food- Arranged food on plate; top with butter, gravy,etc. Cover with lid or vented plastic wrap. After reheating, let stand for a few minutes.

10. MEMORY FUNCTION

a. Press Memory to program and choose up to three cooking procedures.Each procedure will be indicated by 1, 2 or 3 in the display.

b. Press Memory until your desired procedure number appears in the display. Press +30S to begin it. A maximum of two cooking stages can be set for each procedure.

c. To program a procedure, follow the steps listed below. Example: Cook food at 80% Power Level for 3 minutes and 20 seconds; save as memory 2.

- Press Memory twice; screen displays 2.
- Press Cook Time , then press "3" , "2" and "0" in order.
- Press Power level once, then press "8" for "PL 8" to display.
- Press +30S to save the procedure. Oven beeps once.
  Or press +30S twice directly to save and start cooking.
- To choose the procedure from the memory list, press Memory twice. Screen will display "2". Press +30S to run procedure.

NOTE	Auto Menu cannot be set in Memory function.

OPERATION

11. Muti-Stage Cooking

At most 2 stages can be set for cooking. If one stage is Defrost, it will automatically set to be the first stage.

NOTE	Auto Menu cannot be set in Multi-stage Cooking.

EXAMPLE: 80% Power Level for 5 minutes followed by 60% Power Level for 10 minutes; saved as memory 3.

a. Press Memory 3 times, screen displays 3.
b. Press Cook Time, then press "5" , "0" and "0" to set first stage cook time.
c. Press Power Level once, then press "8" to choose 80% first stage cooking power.
d. Press Cook Time again, then press "1", "0", "0" and "0" to set second stage cook time.
e. Press Power Level again, then press "6" to choose 60% second stage cooking power.
f. Press +30S to immediately start multi-stage cooking.
g. To choose the procedure from the memory list, press Memory three times. Screen will display "3"; press +30S to run procedure.

NOTE	If you do not want to save a particular multi-stage program as a procedure, do not press Memory as the first step. Press +30S after programming both stages.

12. TURN ON/OFF THE BUZZER SOUND

It is default that the buzzer sounds is open.In waiting state, long pressing on number 8 for 3 seconds, it sounds a long beep, turns off the sound.
When the sounds turn on, long pressing on 8 f or 3 seconds, it sounds a long beep and the sound turn off. All the buttons has no beep when they are pressed, including the ending cooking sounds is turn off too.

NOTE	All mod els has mute function and energy-saved function. This function can work under lock function too.

OPERATION

13. ENERGY SAVER MODE

a. In standby mode, press the " " once (less than 3 seconds to avoid starting the child lock function) to enter the Energy Saver mode.
b. In child-locked mode, press the " " once (less than 3 seconds) and release to enter the Energy Saver Mode.
c. Above operation is the only way to start the Energy Saver mode.
d. The Energy Saver mode works only if the door is closed.

14. LOCK FUNCTION FOR CHILDREN

Lock: In waiting state, press " " for 3 seconds, there will be a long "beep" denoting the entering into the children-lock state; meanwhile, oven will display "LOCKED". 2 seconds later, the screen will display " L " and the current time, if the clock has been set.
Lock quitting: In locked state, press " " for 3 seconds, there will be a long "beep" denoting that lock is released.

15. INQUIRING FUNCTION

a. In cooking state, press " CLOCK ", the screen will display clock for three seconds, if the clock has been set.
b. In the microwave cooking state, press " POWER LEVEL " to inquire microwave power level, and the current microwave power will be displayed. After three seconds, the oven will turn back to the previous state. In multi-stage state, the inquiring way can be done by the same way as above.

16. COOKING END REMINDING FUNCTION

When the cooking is over, the buzzer will sound 5 "beep" to alert user the cooking is finished.
The screen displays " FINISH".

TROUBLESHOOTING

Check your problem by using the chart below and try the solutions for each problem.

TROUBLE	Possible Cause	Possible Remedy
Oven will not start	a. Electrical cord for oven is not plugged in. b. Door is open. c. Wrong operation is set.	a. Plug into the outlet. b. Close the door and try again. c. Check instructions
Arcing or sparking	a. Materials to be avoided in microwave oven were used. b. The oven is operated when empty. c. Spilled food remains in the cavity.	a. Use microwave-safe cookware only. b. Do not operate with oven empty. c. Clean cavity with wet towel.
Unevenly cooked foods	a. Materials to be avoided in microwave oven were used. b. Food is not defrosted completely. c. Cooking time, power level is not suitable. d. Food is not turned or stirred.	a. Use microwave-safe cookware only. b. Completely defrost food. c. Use correct cooking time, power level. d. Turn or stir food.
Overcooked foods	Cooking time, power level is not suitable.	Use correct cooking time, power level.
Undercooked foods	a. Materials to be avoided in microwave oven were used. b. Food is not defrosted completely. c. Oven ventilation ports are restricted. d. Cooking time, power level is not suitable.	a. Use microwave-safe cookware only. b. Completely defrost food. c. Check to see that oven venti-lation ports are not restricted. d. Use correct cooking time, power level.
Improper defrosting	a. Materials to be avoided inmicrowaveoven were used. b. Cooking time, power level is not suitable. c. Food is not turned or stirred.	a. Use microwave-safe cookware only. b. Use correct cooking time, power level. c. Turn or stir food
Sensor cooked foods not properly cooked	a. Cover or lid on food not vented. b. Door opened before sensor-detected cooking time appears in display.	a. Cover or lid over food must contain vent hole for escaping steam. b. Do not open door to stir orturn food before sensor-detected cooking time appears in display.

TROUBLESHOOTING

TROUBLE	Possible Cause	Possible Remedy
E-5	a. Frequency converter works abnormally. b. The Interlocking circuit works abnormally (the microswitch fails to be pressed in the right place). c. The magnetron is damaged. d. The signal line for communication between frequency converter and computer board becomes loose. e. The harness terminal of the microwave relay on the computer board becomes loose. To diagnose this fault, it's necessary to observe the microwave working for at least 1 minute.	Please contact the after-sale service, contact number: 855-204-5313.
E-6	Frequency converter or magnetron tube works abnormally.	Please contact the after-sale service, contact number: 855-204-5313.

ONE YEAR LIMITED WARRANTY

This product carries a warranty stating that it will be free from defects in material and workmanship for a period of one year from the date of purchase. This warranty is valid for the original retail purchaser from the date of initial retail purchase and is not transferable. Keep your original sales receipt.

IMPORTANT:

1. This warranty does not cover damages resulting from accident, misuse or abuse, lack of reasonable care, the affixing of any attachments not provided with the product, loss of parts, or subjecting the appliance to any but the specified voltage. (Read directions carefully.)
2. This warranty is void if this product is ever used for other than private household purposes.
3. This warranty is void if this product is ever used outside of United State.

If service is required during the warranty period, properly pack your unit. We recommend using the original carton and packing materials.
If additional assistance is needed, please contact customer assistance at:

customercare@us.toshiba-lifestyle.com
855-204-5313
Midea Am erica Corp
5 Sylvan Way,
Parsippany, NJ 07054

Midea America Corp. expressly disclaims all responsibility for consequential damages or incidental losses caused by use of the appliance. Some states do not allow this exclusion or limitation of incidental or conse quential losses so the foregoing disclaimer may not apply to you. This warranty gives you specific legal rights, and you may also have other rights which may vary from state to state.

The serial number can be found on the back cabinet. We suggest that you record the serial number of your unit in the space below for future reference

Model Number:_____

Serial Number:_____

SAVE THIS FOR YOUR RECORDS

Made in China

PN:16170000A81307

Customer Assistance: 855-204-5313
Midea America Corp
5 Sylvan Way, Parsippany, NJ 07054