Table Of Contents

Owner's Guide

Arming the System 3
Disarming the System 4
Emergency Override 4
System Armed & Activated 5
Panic 5
Sensor By-Pass 5
Auxiliary Channel 6
3rd Channel 6
Remote Controlled Anti-Carjack ... 6
Anti-Carjacking 7
Valet Mode 8
LED Status Indicator 8
Auxiliary Sensor & Prewarn 9

Installation Instructions

How To Program Remote Control 9
How To Program Features 10
Programmable Features ..... 10 - 12
Wiring Diagram 13
Door Lock/Unlocking Systems 14

This device complies with part 15 of the FCC Rules. Operation is subject to the following two conditions, (1) This device may not cause harmful interference and, (2) This device must accept any interference received, including interference that may cause undesired operation. The manufacturer is not responsible for any radio or TV interference caused by unauthorized modifications to this equipment. Such modifications could void the user's authority to operate the equipment.

Any Changes or modifications not expressly approved by the party responsible for compliance could void the user's authority to operate the equipment.

Arming: *P*ress & Release the "Lock" button

Silent Arming: *P*ress & Release the "3rd" button Twice in 3 sec.

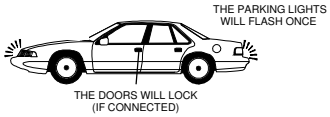

Disarming: *P*ress & Release the "Unlock" button

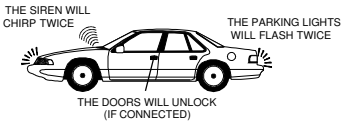

Silent Disarming: *P*ress & Release the "3rd" button Twice in 3 sec

Emergency Override:

Panic: *P*ress & Hold the "Lock" Button for 3 Sec's, with the ignition "Off"

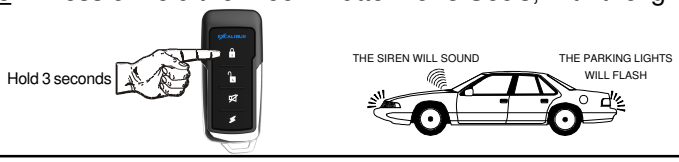

Shock Sensor & Prewarn Bypass:

1) *A*rm the alarm by, Pressing & Releasing the "Lock" button
2) *W*ithin 2 seconds Press & Release the "3rd" button.

To Activate the Auxiliary Channel: *P*ress & Hold The "3rd" Button for 3 Seconds

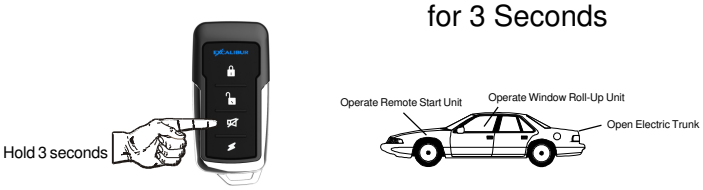

To Activate the 3rd Channel: *P*ress & Hold The "4th" Button for 3 Seconds

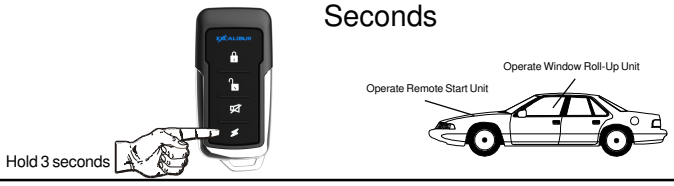

To Activate Remote Anti-Carjack:

*P*ress & Hold the "4th" button, for 3 Secs, with the ignition "On"

(programmable feature #10)

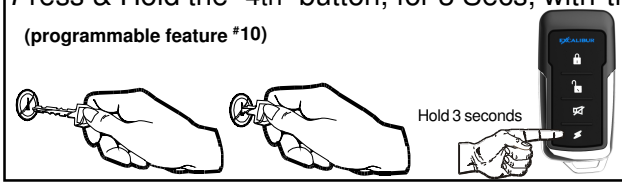

Arming the Alarm

The system may be "Armed" by any of 3 methods:

1) <u>Remote Control Arming</u>: Press & Release the "Lock" button

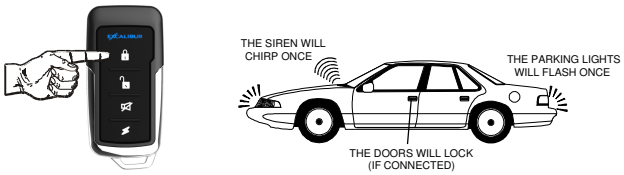

2) <u>SILENT Remote Control Arming</u>: Press & Release the "3rd" **button Twice within 3 seconds**

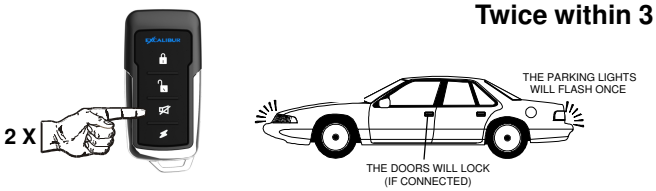

<u>Upon Arming</u>:
- The siren will chirp one time. (3 times if there is open zone)
- The parking lights will flash once.
- The doors will lock. (If an optional interface is connected)
- The starter interrupt will engage.
- The LED Status Indicator will begin to flash slowly.

- If a zone is open, (for example a car door), when arming, the alarm will still arm, but will bypass the open zone until the zone is secured (siren will chirp 3 times).

3) <u>To Passively Arm</u>: Turn Ignition "Off", Then Close all Doors.

Automatic "Last Door Arming" is a <u>programmable feature</u> which allows the alarm to arm itself and, if desired, lock the doors upon arming.

If on, anytime the ignition is turned off, and then a door is opened and closed:
- The Siren will chirp once to confirm arming countdown has begun.
- The LED Status Indicator will begin to flash rapidly.

<u>Thirty seconds later</u>:
- The siren will chirp & the lights will flash once.
- The LED Status Indicator will begin to flash slowly.
- The starter interrupt will engage.

- The alarm is now fully armed. The doors will lock at this time, if programmed to do so, and if the vehicle is equipped.

- The system can not *<u>Last Door Arm</u>* if a protected zone is open. Should a vehicle door be opened during the arming countdown, the countdown will stop and start over again when the door is closed.

AUTO REARM (programmable) allows the Alarm to Rearm itself, if it is Disarmed.

Disarming the Alarm

The system may be "Disarmed" by any of 3 methods:

1) <u>Remote Control Disarming</u>: Press & Release the "Unlock" button

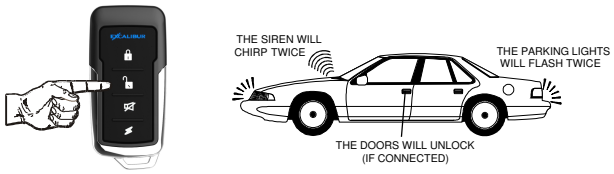

2) <u>SILENT Remote Control Disarming</u>: Press & Release the "3rd" button Twice within 3 sec

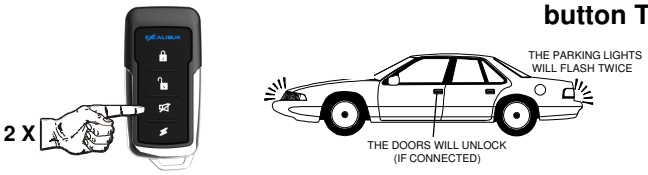

<u>Upon Disarm</u>:
- The siren will chirp twice. (4 chirps if alarm has activated & reset)
- The parking lights will flash twice. (4 times if alarm has activated)
- The doors will unlock. (If an optional interface is connected)
- The starter interrupt will disengage.
- The LED Status Indicator begins flashing rapidly for Automatic Rearming, until alarm Rearms or a vehicle door is opened.

2-STAGE DISARM: If Disarming the alarm while it is triggered (siren sounding), the first press of any remote control button will only silence the siren/horn. A second press of the "Unlock" button will Disarm the alarm.

IMMOBILIZER MODE: If this mode is programmed "On", the starter interrupt will remain engaged after the alarm is Disarmed, until the ignition is turned "On" and you Press & Release the Valet button. *(Refer to programmable feature # 5)*

<u>To Start Vehicle: .</u>

1. Disarm the alarm, then Turn "On" the vehicle's ignition

2. Press & Release the Valet Button.

Emergency Override

Step 1: With the system in the armed condition, enter the vehicle via the driver's door (be aware that the alarm will trigger when the door is opened).

Step 2: Using your key, turn the vehicle's ignition to the "On" position.

Step 3: <u>Within 10 seconds</u>, Press & Release the Valet/ Override Switch.

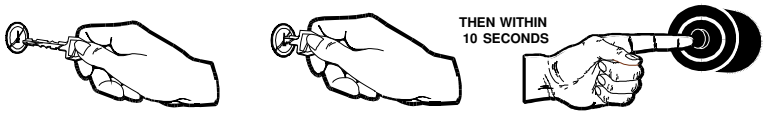

System Armed & Activated

Regardless of method used to Arm the alarm, once Armed, the alarm will monitor all protected zones, and if an intrusion attempt is detected it will activate, or "trigger".

A trigger consists of the following:

- The electronic siren, or optionally the vehicle's horn, will start sounding.
- The exterior parking lights will flash on and off repeatedly.

An activation has a 30 second duration unless the system is disarmed using the remote control or the Valet /Override switch. If all protected zones are secure at the end of the trigger, the system will stop and rearm itself to detect further entry attempts. If a protected zone is still open at the end of the trigger cycle, the alarm will continue to re-trigger itself for up to six activated cycles before it resets itself and ignores the violated zone.

Remote Panic Operation

Should it be needed in a threatening situation, or you feel the need to attract attention, the alarm can be triggered using the remote control. Your alarm features "Panic Mode", which allows you to activate "Panic" from the "Arm/Lock" button.

<u>To Activate Remote Panic</u>: Press & Hold the "Arm/Lock" Button, for 3 seconds, with the ignition "Off".

Sensor By-pass

The shock sensor & Prewarn zone can be by-passed using the remote control. This may be useful in stormy weather.

1) Arm the alarm by, Pressing & Releasing the "Lock" button.

2) Within 2 seconds, Press & Release the "3rd" **button.**

- The siren will chirp once to confirm sensor has been by-passed.
- Upon Disarming the alarm, the sensor zone will reset.

The Auxiliary Channel

The Auxiliary Channel may be used to operate an optional function. Possibilities include remote trunk release, remote car starting, or an on-demand remote window roll-up interface. Please see your Omega dealer for details on available options.

<u>To Activate the Auxiliary Channel</u>:

Press & Hold the "3rd" **Button for 3 Seconds.**

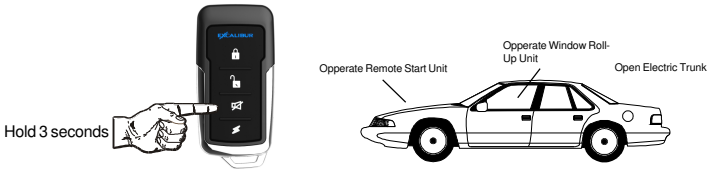

- The alarm will Disarm upon activating the Auxiliary channel.
- The Auxiliary Channel cannot be activated if the vehicle's ignition is "On".

The 3rd Channel Auxiliary Output

The programmable 3rd Channel may be used to operate an optional function, such as a remote start unit or an on-demand remote window roll-up interface. Please see your Omega dealer for details on available options.

<u>To Activate the 3rd Channel</u>:

Press & Hold the "4th" **button for 3 Seconds.**

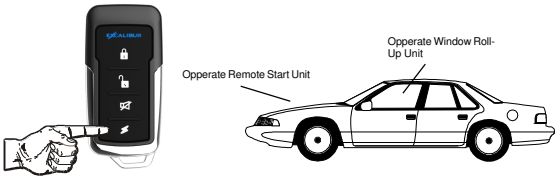

- The 3rd Channel can be programmed to Supply a (-) output when the alarm is Armed to operate a Window Roll-Up module (Programmable feature # 12).

Remote Anti-Carjack

The Anti-Carjacking mode can be activated using the remote control.

- *Refer to next page for sequence details.* (programmable feature # 10)

<u>To Activate Remote Anti-Carjack</u>:

Press & Hold The "4th" **Button, For 3 Seconds, With The Ignition "On".**

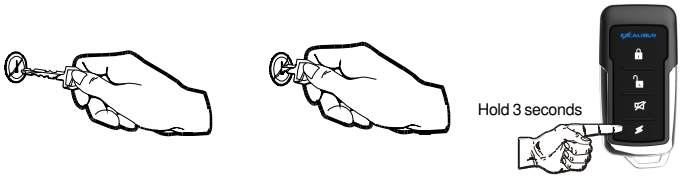

Programmable Anti-Carjacking Protection

The Anti-Carjacking sequence may be activated by any of 3 methods:

1) Using the remote control, by holding down the Small "4th" Button for 3 seconds while the ignition is "On". *(programmable feature # 10)*
2) When a door is *Opened* while the ignition is "On" *(programmable feature # 10)*
3) Every time the ignition is turned "On". *(Programmable feature # 9)*

1) Anti-Carjacking activated using the transmitter: (programmable feature #10)
The Anti Car-Jacking operation may be activated by pressing and holding the remote control's Small "4th" button for 3 seconds while the ignition is "On".

2) Anti-Carjacking activated by an Open door: (programmable feature #10)
If programmable feature #10 is "On", the system will initiate the Anti-Carjacking sequence every time a vehicle door is opened while the ignition is "On".

3) Anti-Carjacking activated by the ignition: (programmable feature #9)
If programmable feature #9 is "On", the system will initiate the Anti-Carjacking sequence every time the vehicle's ignition is turned "On".

IMMOBILIZER MODE: If the "Immobilizer mode" is programmed "On", the ignition activated anti-carjacking sequence will be cancelled and the "Immobilizer mode" disarmed by: *first turning "On" the vehicle's ignition, then Pressing & Releasing the valet button.* *(Refer to programmable feature # 5)*

Once the Anti-Carjacking sequence has begun, the user has 59 seconds to press the Valet/Override Switch in order to cancel the sequence.

ORDER OF ANTI-CARJACKING SEQUENCE:
- For first 20 seconds after the sequence has begun there are no signs.
- From 21-30 seconds, the LED will blink slowly.
- From 31-45 seconds, the LED will blink fast and the siren/horn will chirp once every 2 seconds.
- From 46-60 seconds, the LED will blink fast and the siren/horn will chirp once per second.
- If not cancelled yet, at 61 seconds the alarm will trigger.

In the triggered condition:
- The siren/horn will sound & The parking lights will flash.
- The starter interrupt will engage.

NOTE: Once the Anti-Carjack mode is triggered, the remote control will NOT stop the operation, nor will the system reset automatically. **Once it is triggered, the Anti-Carjacking operation can only be deactivated by:**

1) Turning the vehicle's ignition "Off".

2) Turning the vehicle's ignition back "On".

3) Within 10 seconds, Press & Release the Valet button.

Valet Mode

Valet Mode can only be entered into while the alarm is Disarmed.

Valet Mode turns off all of the alarm's security features, (including Anti-Carjack). Valet Mode is designed for situations in which it is not convenient for the security portion of the alarm to be operational; for example during extended stopovers for vehicle servicing, loaning others your vehicle, maintenance, valet parking, washing, etc. The convenience features such as keyless entry will still operate.

To Enter Valet Mode (Alarm MUST be Disarmed):

Press & Hold the Valet Switch for 3 Seconds.

- The LED Status Indicator will light solid and the siren will emit a long chirp to confirm entry into Valet Mode. Now the system cannot become Armed.

- The vehicle's ignition may be "On" or "Off" when entering Valet Mode.

- *To remind you its in Valet Mode ,The siren will chirp every time the vehicle's ignition is turned "Off"*

To Exit Valet Mode: **Simply Press & Release the Valet Switch.**

- The LED will turn off and the siren will emit a long chirp to confirm that the system has exited Valet Mode. Normal arming operations may be resumed.

- The vehicle's ignition may be "On" or "Off" when exiting Valet Mode.

The LED Status Indicator

The LED Status Indicator visually shows the status of the alarm and also provides a high level of visual deterrence. The LED Status Indicator Light is normally mounted where it can be seen by the driver, as well as from outside.

Security System Status: The primary function of the LED Status Indicator Light is to indicate the normal operating status of the security system:

Off = The system is disarmed and not performing any automatic functions.
On Constant = The system is in the Valet Mode.
Flashing Slow = The system is fully Armed.
Flashing Fast (while Disarmed) = Last Door Arming or Automatic Rearming.

Zone Violation: Once alarm is Disarmed, LED will show which zone triggered alarm until the ignition is turned "On" (this clears unit's memory).

2 flash & pause = Pin-Switch zone triggered alarm.
3 flash & pause = Door zone triggered alarm.
4 flash & pause = Sensor zone triggered alarm.

Automatic Transmitter Verification: For the first 10 seconds after the vehicle's ignition is turned "On", the LED Status Indicator will flash a number of times equal to the number of remote control transmitters which are programmed to operate the alarm. This indication can be from 1 Flash /pause up to 4 Flashes /pause, as the system can be operated by just one, or as many as 4 remote transmitters.

Auxiliary Sensor & Prewarning

Auxiliary Sensor: This security system is equipped with a plug-in port for an optional sensor to increase the effectiveness of the system. The comprehensive line of optional sensors offered is comprised of impact sensors, glass tampering sensors, and microwave/radar sensors which can detect motion inside and outside the vehicle.

Prewarning Detection: This circuit requires connection to a dual zone sensor or detection device. When the sensor's prewarn zone is triggered the siren will emit a series of chirps.

How to Program Remote Controls to the Alarm

To program remote controls to operate the alarm:

Step 1: Turn "On" the vehicle's ignition.

Step 2: Within 7 seconds press the Valet/Override Switch 5 times. The alarm will wolf the siren once to confirm entry into Remote Control Programming Mode.

Step 3: Within 10 seconds, press any Button on each remote to be programmed. The siren will chirp to confirm each time a remote has been programed.

If 10 seconds expire without any programming activity, or if the vehicle's ignition is turned "Off", the system will automatically exit Remote Control Programming Mode. The siren will emit 2 long chirps to confirm exit.

NOTE: Up to 4 remote controls can be programed to operate the alarm. Whenever a remote control, new or existing, is programmed to the alarm, all existing codes are erased for security. So all remote controls which are to operate the alarm, must be programmed in at the same time.

Immobilizer Mode: Immobilizer mode must be disarmed before entering remote control programming mode. *(refer to programmable feature # 5)*

1. Turn "On" ignition
2. Press & Release the Valet/Override button, (siren will chirp twice)
3. Press valet/override button 5 times to enter remote control programming mode.

ATV: The LED Status Indicator will show the number of programmed remote control transmitters for 10 seconds after the vehicle's ignition is turned On.

As the instructions above show, programming extra transmitters to any vehicle security system is easy; the exclusive patented ATV feature protects against someone programming their own transmitter to operate your system.

How to Program Features

To access Features Programming Mode:

Step 1: Turn the vehicle's ignition "On" then "Off".

Step 2: Within 7 seconds of turning the ignition "Off", press the Valet Switch 5 times. The siren will wolf once confirming entry to Features Programming Mode.

Step 3: Within 10 seconds of entering Features Programming Mode, press the Valet Switch the number of times equal to the number of the feature to be programmed. The siren will repeat the feature number with chirps to confirm.

Step 4: After the system acknowledges the feature to be programmed:

- press the “Lock” button on the remote to turn the feature “ON” (the siren will chirp once), or,

- press the “Unlock” Button to turn feature “OFF” (siren will chirp twice).

Note: Once the feature to be programed is selected, you can toggle the feature between its settings by pressing the “Lock” & “Unlock” buttons on the remote control.

- To program more features, simply repeat Steps 3 and 4.
- If 10 seconds expire without any programming activity, or if the vehicle’s ignition is turned “On”, the alarm will automatically exit Features Programming Mode. The siren will confirm exit.

Programmable Features

The alarm has 15 programmable features which allow it to be customized to suite many individual needs. The following pages provide a brief explanation for each feature, and notes its factory default setting.

• = Default Factory Setting

1. Auto-Rearm: (•On = 1 siren chirp / Off = 2 chirps)
- Allows the Alarm to Rearm itself, if it is Disarmed.

2. Last Door Arming: (•On = 1 siren chirp / Off =2 chirps)
- Configures the alarm to automatically arm itself 30 seconds after the last door is closed with the ignition “Off”.

3. Doors Lock w/ Last Door Arming: (•On = 1 siren chirp /Off = 2 chirps)
- Adds the automatic locking of the vehicle's doors to the previous feature.

4. Double Pulse Unlock: (2 pulses = 1 siren chirp / • 1 pulse = 2 chirps)
- Sets alarm to give 2 unlock pulses upon Disarm for cars that require it.

5. Immobilizer Mode: (On = 1 siren chirp / •Off = 2 chirps)
- If this mode is programmed "On", the starter interrupt will remain engaged after the alarm is Disarmed, until the vehicle's ignition is turned "On" and you Press & Release the Valet button.

- Anti-Carjack: Upon disarming the "Immobilizer mode", *ignition activated anti-carjacking* will be automatically cancelled, (if programmed "On").

- Remote Control Programming Mode: Immobilizer mode must be disarmed before entering remote control programming mode.

6. Siren & Horn or Horn: (•Siren & Horn = 1 siren chirp / Horn = 2 chirps)
- This feature configures the alarm's Brown/White Horn-Honk output wire. This wire can be configured to honk the horn in addition to the Brown wire operating the siren, **or take over all of the Siren's functions SO THAT NO SIREN IS NECESSARY.**

- If Siren & Horn are selected: The horn will honk in addition to siren sounding only when the door, pin-switch, or ignition zones are violated. (The horn will not honk if alarm is triggered by the sensor zone, or during confirmation "chirps")

- If Only Horn is selected: The car horn will replace the siren and perform all of its functions. **NOTE:** Brown Siren wire will still be fully active & operational.

7. Shock Sensor False-Alarm Bypass: (On = 1 siren chirp / •Off = 2 chirps)
- This feature will temporarily turn "Off" the shock sensor & pre-warn zone if:

a. The pre-warn is triggered 10 times while the alarm is Armed.
b. The instant trigger zone is triggered 5 times while the alarm is Armed.

- The by-passed zones will be reinstated the next time the alarm is Armed.

8. Dome-Light Delay Bypass: (On = 1 siren chirp / •Off = 2 chirps)
- This feature will turn "Off" the 3-chirp open zone warning when Arming the alarm with the remote control. This is for use in vehicles that keep the dome-light illuminated after the doors have been closed.

9. Ignition Activated Anti-Carjacking: (On = 1 siren chirp / •Off = 2 chirps)
- This feature turns the alarm's Ignition Anti-Carjacking feature "On" or "Off".

10. Remote & Door Activated Anti-Carjacking: (On = 1 chirp / •Off = 2 chirps)
- This feature turns both the alarm's Remote Control and Open Door activated Anti-Carjacking features "On" or "Off".

11. <u>Dome-Light or Window Roll-Up</u>: (•Dome-Light = 1 siren chirp / Window Roll-UP = 2 chirps)

- Configures the alarm's "Black/White" wire to operate the:

a. <u>Dome-Light</u>: Supply a (-) output when the alarm is Disarmed to illuminate the vehicle's Dome-Light for 30 seconds through the use of a relay, or

b. <u>Window Roll-Up or accessory</u>: Supply a (-) output for 30 seconds when the alarm is Armed to operate a Window Roll-Up module or other accessory.

12. <u>3rd Channel Output</u>: (•Momentary = 1 siren chirp / Window Roll-UP = 2 chirps)

- Configures the alarm's "Pink" wire to operate an:

a. <u>Accessory</u> : Supply a (-) output as long as the "4th" button on the remote control, is pressed & held while the vehicle's ignition is "Off", (max 30 seconds).

b. <u>Window Roll-Up or accessory</u>: Supply a (-) output for 30 seconds when the alarm is Armed to operate a Window Roll-Up module or other accessory.

13. <u>Ignition Door Lock/Unlock</u>: (•On = 1 siren chirp / Off = 2 chirps)
- Configures the alarm to Lock the vehicle's doors when the ignition is turned "On" and Unlock the vehicle's doors when the ignition is turned "Off".

14. <u>"RFID" Add-On to Anti-Hijacking</u>: (On = 1 siren chirp / •Off = 2 chirps)
- Adds an "RFID" layer to both the <u>Ignition</u> & <u>Open Door</u> activated Anti-Hijacking features. (Note: Special RFID remote control required)

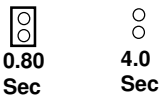

<u>JUMPER ON SIDE OF ALARM BRAIN:</u>

<u>Lock Pulse Time</u>: (• .80 seconds = Jumper "In" / 4 seconds = Jumper "Out")
- Determines the length of the alarm's door lock/unlock pulse output.

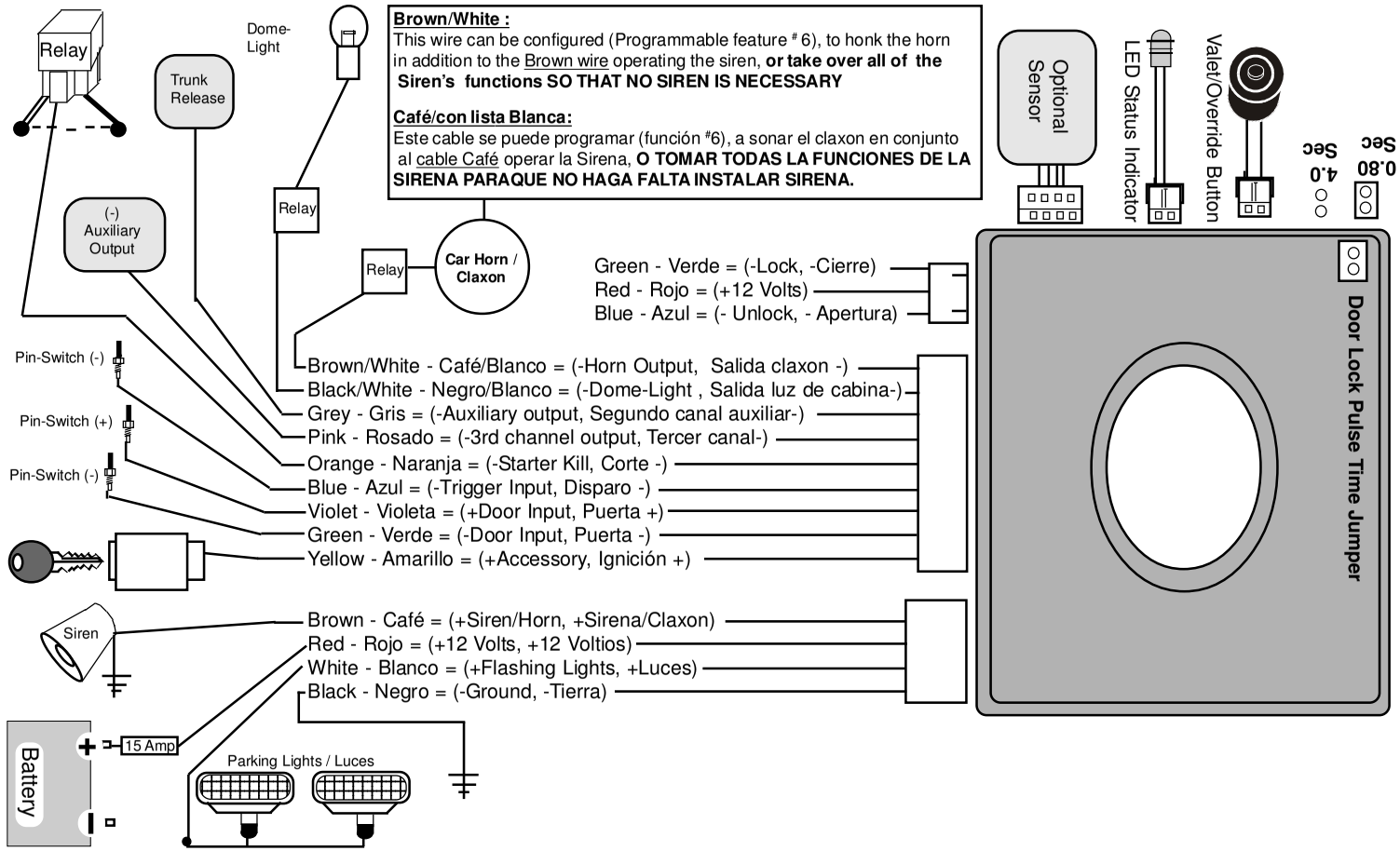
Door Lock Pulse Time Jumper
0.80 Sec
4.0 Sec
Valet/Override Button
LED Status Indicator
Optional Sensor
Brown/White :
This wire can be configured (Programmable feature # 6), to honk the horn in addition to the Brown wire operating the siren, or take over all of the Siren's functions SO THAT NO SIREN IS NECESSARY
Café/con lista Blanca:
Este cable se puede programar (función #6), a sonar el claxon en conjunto al cable Café operar la Sirena, O TOMAR TODAS LA FUNCIONES DE LA SIRENA PARAQUE NO HAGA FALTA INSTALAR SIRENA.
Green - Verde = (-Lock, -Cierre)
Red - Rojo = (+12 Volts)
Blue - Azul = (- Unlock, - Apertura)
Car Horn / Claxon
Relay
Relay
Dome-Light
Trunk Release
Relay
(-) Auxiliary Output
Pin-Switch (-)
Pin-Switch (+)
Pin-Switch (-)
Brown/White - Café/Blanco = (-Horn Output, Salida claxon -)
Black/White - Negro/Blanco = (-Dome-Light , Salida luz de cabina-)
Grey - Gris = (-Auxiliary output, Segundo canal auxiliar-)
Pink - Rosado = (-3rd channel output, Tercer canal-)
Orange - Naranja = (-Starter Kill, Corte -)
Blue - Azul = (-Trigger Input, Disparo -)
Violet - Violeta = (+Door Input, Puerta +)
Green - Verde = (-Door Input, Puerta -)
Yellow - Amarillo = (+Accessory, Ignición +)
Siren
Brown - Café = (+Siren/Horn, +Sirena/Claxon)
Red - Rojo = (+12 Volts, +12 Voltios)
White - Blanco = (+Flashing Lights, +Luces)
Black - Negro = (-Ground, -Tierra)
Battery
+
-
15 Amp
Parking Lights / Luces

Door Locking Systems / Sistemas De Cierre

Negative Trigger System / Sistema Negativo:

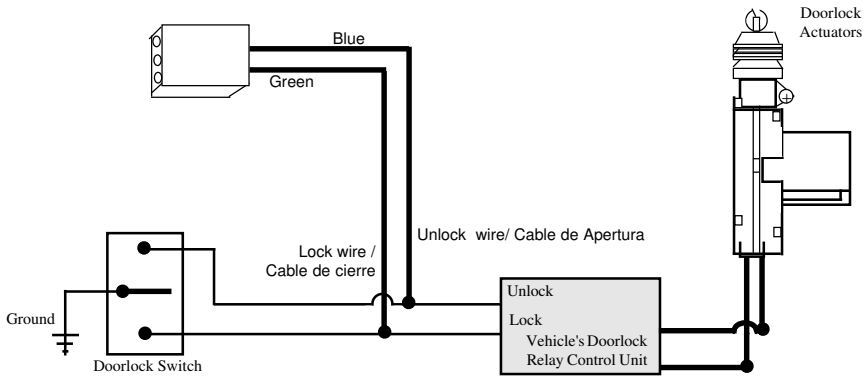

Positive Trigger System / Sistema Positivo:

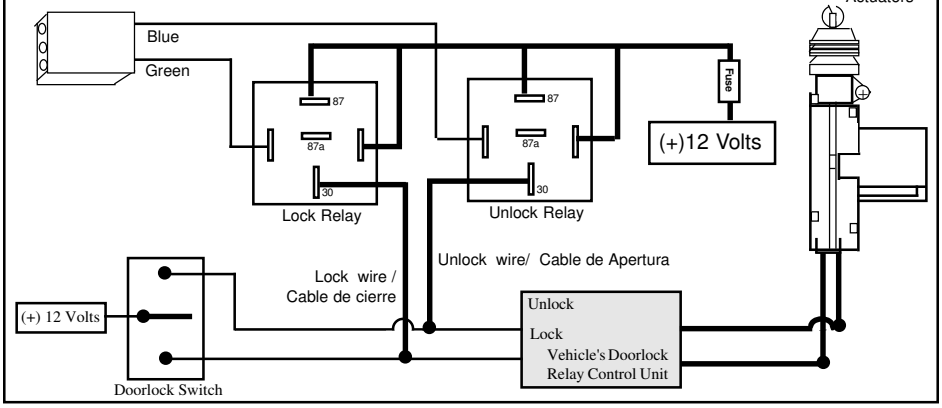
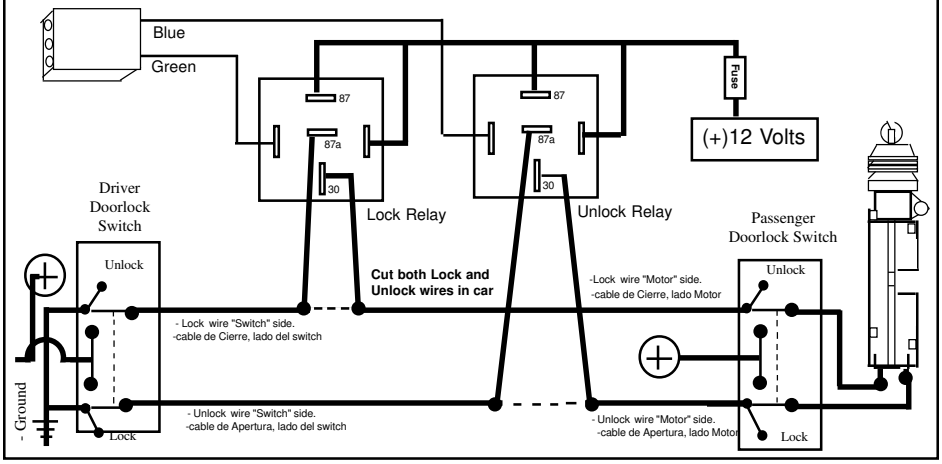
5 Wire Reversal (Rest at ground): Cambio de Polaridad: