INSTUDIO BLUETOOTH SPEAKER

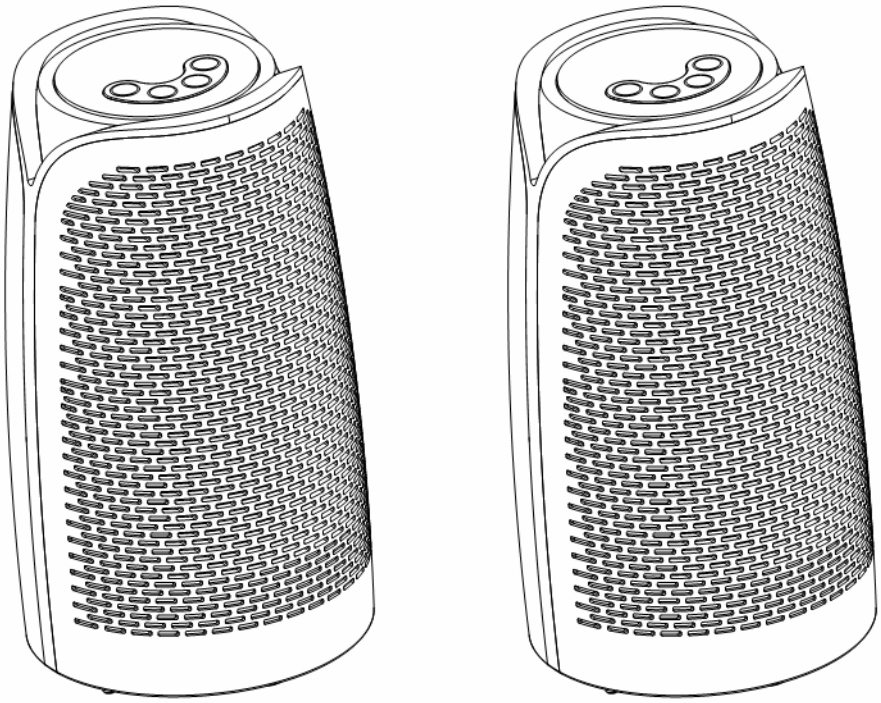

Instruction Manual

A. **INTRODUCTION**

This Bluetooth wireless speaker system applies the latest BT 2.1 wireless technology platform that enables you to enjoy music, video everywhere you want.

B. **FEATURES**

1. Bluetooth 2.1 Platform
2. Operating distance up to 10 meters / 33 feet (open area)
3. Powered by 6x “C”Size alkaline batteries (not included) or Power adapter
4. IPX 3 Water-proof feature
5. 3.5mm line in jack

C. **PACKAGING**

2 X Bluetooth speakers
2 X 3.5 to 3.5mm audio cable
1 X User manual
2 X AC/DC adapter

D. COMPONENT IDENTIFICATION

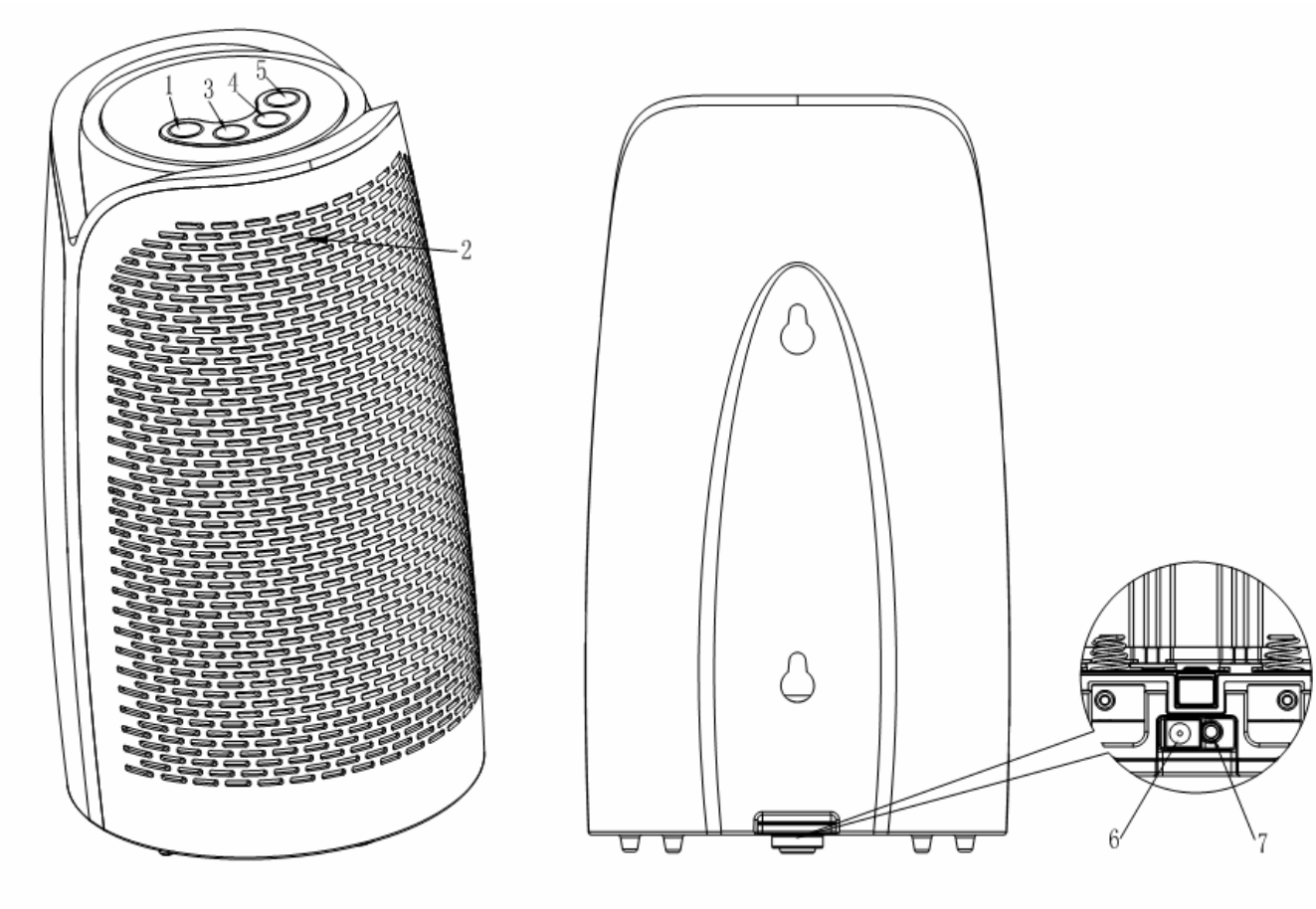

1. Power ON/OFF
2. Power LED Indicator(Red, Blue, Green)
3. Pair
4. Volume -
5. Volume+
6. Power adapter jack
7. 3.5mm audio jack

E. General operation:

Power on:
Press POWER button for 2 seconds. Blue LED will flash quickly two times.

Power off:
Press POWER button for 2 seconds. Blue LED will flash quickly three times.

Switch between Bluetooth and Line in
Quick press Power key once, SOLID GREEN LED lights up.

Maximum volume :
When maximum volume is reached,Red and Blue LED flash.

F. <u>PAIRING (Stereo, play music with two speakers)</u>

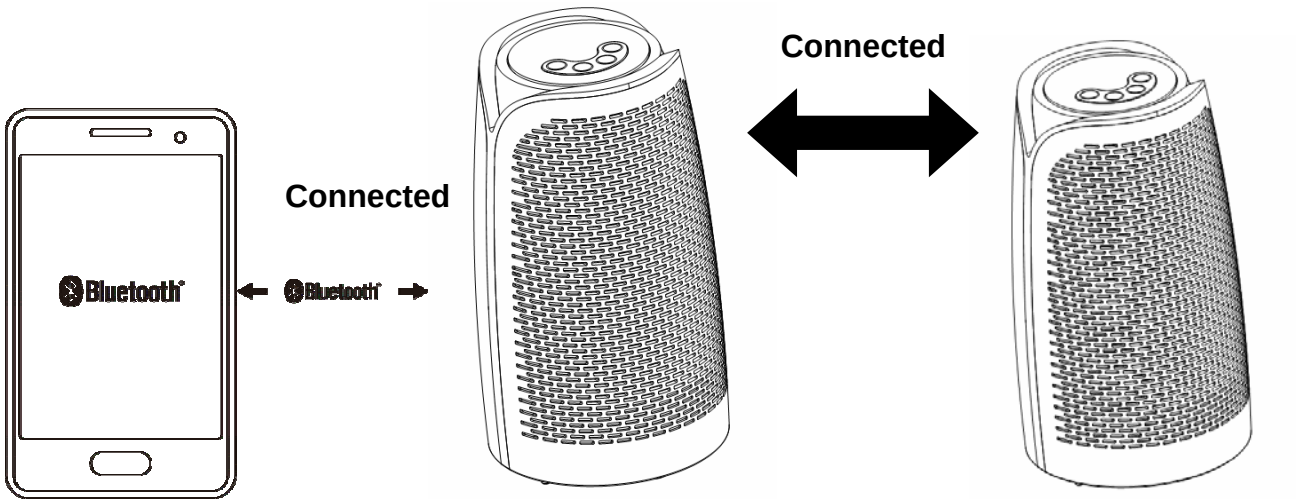

Bluetooth Device

Step 1. Pairing between two speakers

1. Make sure two speakers are powered off.

2. Press and hold the POWER button (approx. 4 seconds) for the first speaker until RED LED flashes.

3. Press and hold the POWER button (approx. 8 seconds) of the second speaker until RED and BLUE LED flash alternatively.

4. Solid RED LED lights up when two speakers are connected. (approx. 12 seconds)

Step 2. **Pairing between speakers and bluetooth device (eg. Mobile phone)**

1. Make sure two speakers are connected.

2. Enable your Bluetooth device such as cell phones, tablets or other Bluetooth media, and make sure it is in searching mode.

3. Choose either one of the speakers and press and hold the PAIR key for 4 seconds to enter the pairing mode, this speaker will be the MASTER speaker (Left Channel)(BLUE LED flashes quickly), the other speaker will be the SLAVE speaker (Right Channel) (BLUE LED flashes slowly) .

4. Select “inStudio 8016810” in the list shown in the Bluetooth device.

5. Enter “0000” if password is required.

6. When connected, BLUE LED will flash slowly for the MASTER speaker(Left Channel). RED LED will light up for SLAVE speaker(Right Channel).

7. When playing music, for MASTER speaker(Left Channel) SOLID BLUE LED lights up, for SLAVE speaker (Right Channel) SOLID RED LED lights up.

Important Note: When two speakers are connected to the user's bluetooth device, if user tries to search the third bluetooth device around, there will be interference and sound interruption.

G. Pairing (Mono, play music with one speaker only)

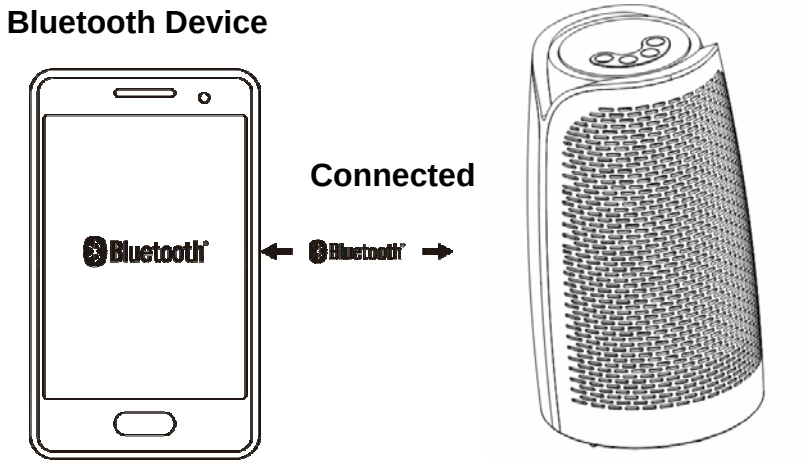

1. Swith the speaker (ONE Speaker only) on. Press the PAIR button and hold for 4 seconds to enter pairing mode. The BLUE LED flashes quickly.

2. Enable your Bluetooth device such as cell phones, tablets or other Bluetooth media, and make sure it is in searching mode.

3. Select “inStudio 8016810” from the list of discovered Bluetooth devices on your cell phones, tablets or other Bluetooth media. Wait for the connection to be completed.

4. Enter “0000” if password is required.

5. When Bluetooth connection is made, SOLID BLUE LED lights up.

6. You can now enjoy your music.

H. Auto Pairing

Once pairing is made the first time, auto pairing will start next time when you swith on the speakers. Bluetooth of your bluetooth device must be enabled BEFORE swithcing on the speakers.

I. <u>Line in</u>

1. Connect the speaker with your audio device directly by the supplied 3.5mm cable
2. Quick press POWER button once to swith to line in mode.
3. Green LED lights up.

Important note: Line in function only supports MONO mode with one speaker.

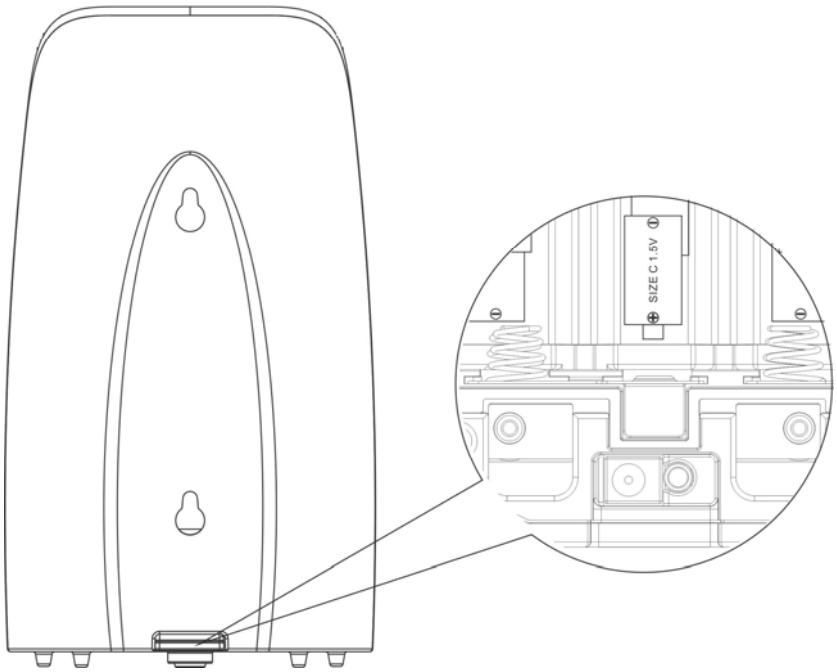

Battery Installation:

1. Turn the speaker over; on the bottom of the speaker you will see the battery door.
2. Open the battery door by pinching the two tabs and pulling towards you.
3. Install 6 (six) C size batteries following the battery markings inside the compartment.
4. Close the battery door until the door snaps shut.

Battery compartment

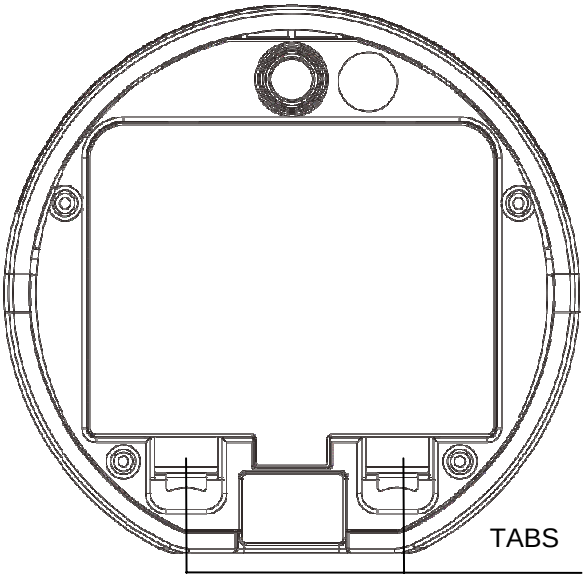

Bottom portion of the speaker

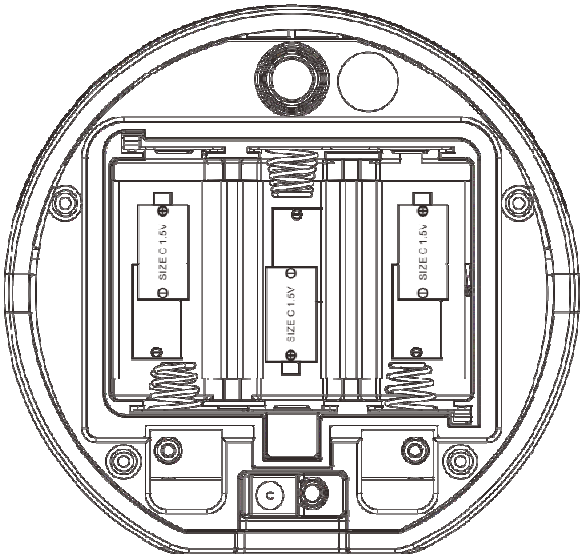

Insert batteries correct direction

J. TECHNICAL SPECIFICATIONS

Carrier Frequency : Bluetooth 2.1
Power Requirements : By 6x C size alkaline batteries (not included)
Or power adapter
Audio Frequency Response : 30Hz – 18KHz
Distortion : <1%
S/N Ratio : 65dB (typical)
Channel Separation : 60dB (Typical)
Operation Distance : Up to 10 meters / 33 feet (open area)
Audio Output Power : 5W

NOTES:

This speaker is in compliance with the specified Bluetooth version. It does not guarantee compatibility of all functions on every Bluetooth enabled device. Please check with your mobile phone's user manual for compatibility and functionality.

Volume control of MASTER speaker (Left Channel) and SLAVE(Right Channel) are controlled independently.

When maximum volume is reached, RED and BLUE LED will flash for three times.

When there is no bluetooth connection for 15 minutes, speakers will be auto power off.

When battery is low, RED, BLUE, GREEN LED will flash alternatively for 60 seconds and power will be off.

K. TROUBLE SHOOTING

NO SOUND
- The speaker’s battery charge is too low. Replace with the new batteries.
- Ensure the speaker is ON.
- Ensure Bluetooth device is ON.

- The volume of speaker is too low; adjust the volume to an appropriate level.
- Unable to connect with BlueTooth device, RESET the speaker by pressing and holding the Pair/Battery Check button for 12 seconds.
- The speaker may be too far away from the Bluetooth device, move closer to it.

THE FCC WANTS YOU TO KNOW

Warning! This device complies with Part 15 of the FCC rules. Operation is subject to the following two conditions:
(1) This device may not cause harmful interference and
(2) this device must accept any interference received, including interference that might cause undesired operation.

Changes or modifications to this unit not expressly approved by the party responsible for compliance could void the user's authority to operate the equipment.

This equipment has been tested and found to comply with the limits for a Class B digital device, pursuant to Part 15 of the FCC rules. These limits are designed to provide reasonable protection against harmful interference in a residential installation. This equipment generates, uses and can radiate radio frequency energy and if not installed and used in accordance with the instructions, may cause harmful interference to radio communications. However, there is no guarantee that interference will not occur in a particular installation. If this equipment does cause harmful interference to radio or television reception, which can be determined by turning the equipment off and on, the user is encouraged to try correct the interference by one or more of the following measures:
- Reorient the receiving antenna.
- Increase the separation between the equipment and receiver.
- Connect the equipment into and outlet on a circuit different from that to which the receiver is connected.
- Consult the dealer or an experienced radio/TV technician for help.

Industry Canada Notice

This device complies with Industry Canada licence-exempt RSS standard(s). Operation is subject to the following two conditions: (1) this device may not cause interference, and (2) this device must accept any interference, including interference that may cause undesired operation of the device. This digital apparatus does not exceed the Class B limits for radio noise emissions from digital apparatus set out in the Radio Interference Regulations of Industry Canada.

Le présent appareil est conforme aux CNR d'Industrie Canada applicables aux appareils radio exempts de licence. L'exploitation est autorisée aux deux conditions suivantes : (1) l'appareil ne doit pas produire de brouillage, et (2) l'utilisateur de l'appareil doit accepter tout brouillage radioélectrique subi, même si le brouillage est susceptible d'en compromettre le fonctionnement.