BURLEIGH

BlueAnt
ACTIVE AUDIO | Product Manual

This device complies with Part 15 of the F
harmful interference, and (2) this device m

FCC Caution:

Changes or modifications not expressly a
equipment.

FCC Statement:

"This equipment has been tested and fou
limits are designed to provide reasonable
and can radiate radio frequency energy a
radio communications. However, there is
harmful interference to radio or television
o correct the interference by one or more

—Reorient or relocate the receiving anten
—Increase the separation between the e
—Connect the equipment into an outlet o
—Consult the dealer or an experienced r

IMPORT CUSTOMER NAME: ***
IMPORT CUSTOMER ADDRESS:***

FCC Rules. Operation is subject to the following two conditions: (1) this device may not cause
must accept any interference received, including interference that may cause undesired operation.

pproved by the part responsible for compliance could void the user's authority to operate the

nd to comply with the limits for a Class B digital device, pursuant to part 15 of the FCC Rules. These
protection against harmful interference in a residential installation. This equipment generates, uses
nd, if not installed and used in accordance with the instructions, may cause harmful interference to
no guarantee that interference will not occur in a particular installation. If this equipment does cause
reception, which can be determined by turning the equipment off and on, the user is encouraged to try t
of the following measures:

nna.
quipment and receiver.
n a circuit different from that to which the receiver is connected.
adio/TV technician for help

Welcom

The BlueA
loud audio
better than

Buttons

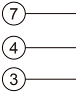

e to the BlueAnt Burleigh Powerful Bluetooth speaker

nt Burleigh speaker is a powerful portable Bluetooth speaker designed to output great sounding and super . Featuring multiple input options and different EQ settings to match your mood, your music with sound ever before.To learn how to get the most out of your BlueAnt Burleigh please read through this manual.

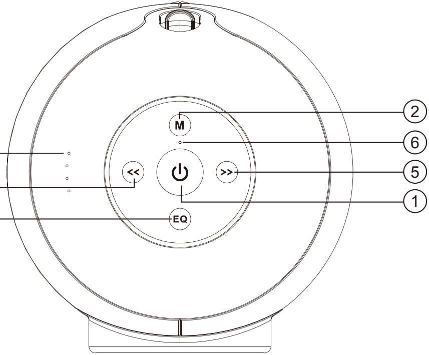

Item	Button	Function
1	⏻	Power button - short press to power on/off
2	**M**	Mode button - click to change modes
3	**EQ**	EQ Button - Click to change EQ
4	**>>**	Skip forward button - Click to skip
5	**<<**	Skip backward button - Click to skip
6	◦	Indicator light
7	◦ ◦ ◦ ◦	Battery Indicator

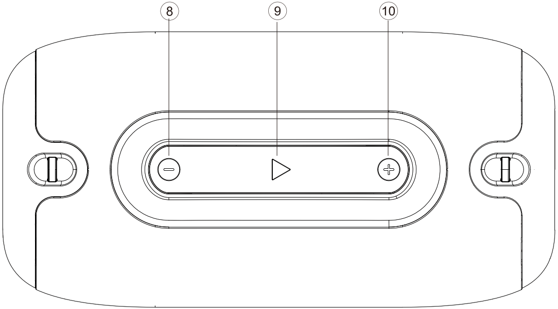

Item	Button	Function
8	−	Volume down - Single click or hold
9	▷	Play/Pause button-Click to play/pause, Double Click for SIRI/GOOGLE.Click to answer/end, Double Click to reject call.
10	+	Volume up - Single click or hold

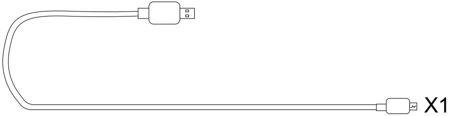
USB Cable

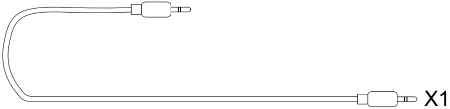
AUX In Cable

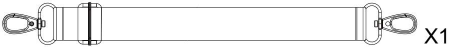
Carry Strap

Behind the port cover

Item	Button	Function
11	▯ ψ	MicroUSB Charge slot – please use supplied AC charger and USB cable, charge time upto 3.5 hours. The Burleigh also features an iPhone battery meter.
12	▯ ▪	Micro SD card slot – upto 32GB card supported MP3, WMA, WAV, APE,FLAC audio formats, card sold separately
13	◎ AUX	Aux in Jack 3.5mm – Aux in cable supplied
14	∩	Carry strap hooks for use with supplied carry strap.

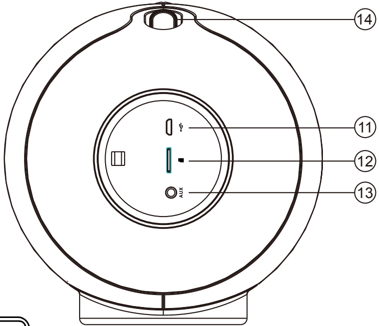

AC Charger

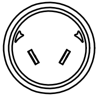
AU

US

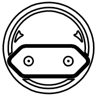
EU

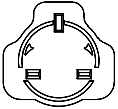
UK

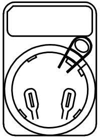
BODY

Getting started

Power on/off

Short press ⏻ button to power on/off the speaker.
The indicator light will flash blue. The speaker has a memory function and when powered will enter the same mode as prior to power off. Each time the speaker powers on it will reset to 25% volume.
After 10 mins with no activity/connection the Burleigh will automatically power off to conserve battery.

Modes

Bluetooth Mode

A) Pairing

Power on the speaker and enter Bluetooth mode. The light indicator will flash. On your smartphone search Bluetooth devices for the “BlueAnt Burleigh”. Once connected the speaker will announce it is “connected” and the indicator light will cease flashing.

B) Music

▷	Click to play/pause
<<	Click for previous track
>>	Click for next track
−	Click to decrease volume
+	Click to increase volume

C) Calls

▷	Click to answer an incoming call
▷	Click to end the active call
▷	Double click to reject an incoming call

D) SIRI/GOOGLE

▷	Double click to activate/cancel Siri/Google voice dialing.

E) Disconnect

▷	Press and hold to disconnect the current Bluetooth connection. The Burleigh will prompt “disconnected”. Then other Bluetooth devices can find and pair with the Burleigh.

Micro SD Card Mode

When you insert a Micro SD Card into the Burleigh it will switch to Micro SD card playback and announce memory card playback Please press the play button to commence playing music from the card.

Please note the Burleigh supports Micro SD cards upto 32GB, FAT32 format and MP3, WMA, WAV,APE,FLAC audio formats:

If you wish to switch modes please press the **M** button.

▷	Click to play/pause
<<	Click for previous track
>>	Click for next track
−	Click to decrease volume
+	Click to increase volume

Aux in Mode

Use the 3.5mm audio cable included to connect the speaker to an audio source (PC, MP3/MP4, mobile ph
Short press the **M** button to enter “AUX IN” mode (the speaker will prompt “Aux in” mode).
The speaker will play the music from the audio source.

▷	Click to mute play back
−	Click to decrease volume
+	Click to increase volume

To change or control tracks please use your music source when in Aux in mode.

EQ

The Burleigh features three different EQs: Standard, Bass Boost, Movies.
EQ Click to change EQ settings.
The default EQ is Standard EQ. This is for use when music is already very Bass heavy and you need to
back a bit. Standard EQ is the loudest option. Bass Boost EQ will enhance the level of bass.Movie EQ e
using the Burleigh as a soundbar with low latency playback and the ability to hear the dialogue and all th
without compromise.

one).

pull it
nables
e action

LEGALS

Please protect your ears. BlueAnt devices can reach volumes above 100 decibels. Prolonged use at hig
volumes may affect your hearing capacity and may result in noise induced hearing loss (NIHL). Please r
enclosed safety card for information about the safe use of BlueAnt products. The Bluetooth® word mark
are registered trademarks owned by Bluetooth SIG, Inc. and any use of such marks by BlueAnt Wireless
license. Google Now is a trademark of Google Inc., Siri is a trademark of Apple Inc., registered in the U.S.
countries. BlueAnt and other trademarks are trademarks of BlueAnt and other organizations and may n
without permission. The BlueAnt logo is registered in the U.S. Patent and Trademark Office and globally
World Intellectual Property Organization under the Madrid protocol.

SUPPORT

SPLASHPROOFThe BlueAnt Burleigh features an IPX4 rating making it splashproof.
For help and support visit: **support.blueantwireless.com**
Register your Burleigh for updates**register.blueantwireless.com**
By using this product you agree to the terms and
conditions listed on the BlueAnt website: **www.blueantwireless.com**

gh
ead the
and logos
is under
and other
ot be used
with the

SAFETY INFORMATION AND WARRANTY TERMS

Important Safety Information

PLEASE READ THIS ENTIRE DOCUMENT CAREFULLY, BECAUSE IT CONTAINS IMPORTANT INFORMATION ABOUT T BLUEANT DEVICES

WARNING - PROTECT YOUR HEARING

BLUEANT DEVICES CAN REACH VOLUMES ABOVE 100 DECIBELS.

PROLONGED USE AT HIGH VOLUMES MAY AFFECT YOUR HEARING CAPACITY AND MAY RESULT IN NOISE INDUCED HEARING LOSS (NIHL). TURN OFF THE POWER TO YOUR DEVICE WHEN NOT IN USE.

Please ensure that the device an
associated components such as
chargers are stored safely and th
packaging or unwanted contents
of thoughtfully. Do not place the
floor or leave it in a place where
could access it, or someone coul

Using Ear Gels

Your BlueAnt headset will come with
that are designed to provide a secur
providing high quality audio.

Ear gels and tips are designed to sit
ear and should not be forced into yo

THE SAFE USE OF

nd any
ear gels or
hat any
s are disposed
product on the
young children
ld trip over it.

n ear gels or foam tips
e fit in your ear while

comfortably in your
ur ear at any time. If

you have trouble fitting the ear gel or foam please refer to the owner's manual for correct insertion and usage information.

Always make sure that the ear gel or foam is fitted securely to your device before placing it in your ear.

WARNING

NOTE THAT NON- COMPLIANCE, MISUSE OR FORCING THE EAR GEL OR FOAM MAY CAUSE DAMAGE TO YOUR EAR CANAL OR EARDRUM, OR MAY OTHERWISE CAUSE BODILY HARM

Smart Practices While Driving

Check the laws and regulations on the use of mobile devices and accessories such as your BlueAnt device in the areas where you drive. Always obey them. **DO NOT**

USE MOBILE DEVICES AND A
AREAS WHERE THEIR USE IS
ENSURE THAT YOUR USE CO
RESTRICTIONS.

- Your BlueAnt device lets you comm
wireless service is available and sa
When driving a car, driving is your f
- If you choose to use your Bluetooth
remember the following tips:
- Get to know your BlueAnt device an
as speed dial and redial. These feat
your call without taking your attent
- If you receive an incoming call at a
let your voice mail answer it for you
- Let the person you are speaking to
driving; if necessary, suspend the c
hazardous weather conditions. Rai
heavy traffic can be hazardous.
- Do not take notes or look up phone
driving. Remember that your prima
driving safely.

CCESSORIES IN
PROHIBITED.
MPLIES WITH ANY

unicate by voice when
fe conditions allow.
irst responsibility.

device while driving,

d its features such
tures help you to place
ion off the road.

n inconvenient time,
u.

know you are
all in heavy traffic or
n, sleet, snow, ice, and

numbers while
ry responsibility is

- Do not engage in stressful or emotional conversations that may be distracting.
  Make people you are talking to aware you are driving and suspend conversations that can divert your attention away from the road.
- In the case of fire, traffic accidents, medical or other serious emergencies, dial the local emergency number.
- Call roadside assistance or a special non-emergency wireless assistance number when necessary.

Care and Handling

Your BlueAnt Bluetooth device is a precision engineered instrument.To ensure its ongoing performance, you should look after it as you would any quality consumer electronic product, and use it in accordance with the instructions. BlueAnt recommends that you take the following precautions.

Avoid leaving your device in direct sunlight, such as on the dashboard

- or console of a car or truck. Do not leave your device unattended in your vehicle.
- Do not leave your device, or use your device, in any area where the temperature may exceed 60 degrees Centigrade (140 degrees Fahrenheit), such as
  Remember that on a hot day the ter
  be significantly higher than the outs
- Do not leave your device, or use your
  temperature is likely to drop below O
  Fahrenheit).
- Do not leave your device, or use your
  humidity, dust, soot, other foreign ob
  cause your device to malfunction.
- Do not use any household or industri
  to clean your device. If your device b
  instances a wipe with a dry or slightl
  to clean it.
- Do not leave your Bluetooth device p
  long periods after it is fully charged.
  periods of continued charging.
- Before charging your BlueAnt device
  adaptor and cable are not damaged.
  seek advice from a qualified profess
- If traveling internationally, ensure th
  adapter is approved for use in the co
  hat the adapter voltage is suited to t

inside a closed car on a hot day. mperature inside a closed car may side air temperature.

r device, in any area where the degrees Centigrade (32 degrees

r device, in any area exposed to jects, smoke, or steam as this may

ial grade detergents or cleaners ecomes dirty or smeared, in most y damp cloth should be sufficient

lugged into a wall or carcharger for BlueAnt does not recommend long

e, make sure that the AC outlet, If you notice any abnormalities, ional.

at your BlueAnt wall or car power ountry where you plan to use it and he local power supply.

- Should a fault develop with your BlueAnt product, contact BlueAnt for advice on how to proceed. Do not attempt to repair or alter any BlueAnt product yourself.

Approved Accessories

The use of accessories not approved by BlueAnt, including but not limited to batteries, antennas, wall adapters, car chargers, ear gels and foam tips and convertible covers, may cause your BlueAnt device to malfunction or in the case of non-approved electrical accessories may cause the device to exceed RF energy exposure guidelines.

Use of non approved accessories will void your device's warranty. For a list of approved BlueAnt accessories, visit our website at: **www.blueantwireless.com**

Electromagnetic Interference

Nearly every electronic device is susceptible to electromagnetic interference (EMI) if inadequately shielded, electromagnetic configured for electromagnetic compatibility. Similar to a mobile phone, your BlueAnt device is a low power transmitter / receiver and is covered by

regulations pertaining to such de

in any facility where posted notic facilities may include hospitals or using equipment that is sensitive

- When instructed to do so, turn o board an aircraft. Any use of a r with applicable laws, regulation
- Some Bluetooth devices may in event of such interference, you manufacturer or physician to di
- If you use any other personal m the manufacturer of your devic adequately shielded from RF en physician may be able to assist information.
- If you are in doubt about whethe be safely turned on or used, ple the location you want to use you person is available or you remai that you turn off your Bluetooth they are required in an emerger

vices. Turn off your BlueAnt device
es instruct you to do so. These
r health care facilities that may be
e to external RF energy.

off your BlueAnt device when on
mobile device must be in accordance
s and airline crew instructions.

nterfere with some hearing aids. In the
may want to consult your hearing aid
iscuss alternatives.

nedical device, consult
e to determine if it is
nergy. Your doctor or
you in obtaining this

er your BlueAnt device
ase consult an authorized person in
ur BlueAnt device. If no authorized
n uncertain, BlueAnt recommends
device and any mobile phones unless
ncy situation.

Recycling Bluetooth Accessories

Do not dispose of Bluetooth accessories, such as chargers or headsets, with your househol
collection systems are set up to handle electrical and electronic waste items, and may proh
Check he laws and regulations for your areas to determine how to properly dispose of such
more details. If collection systems are not available, please return unwanted accessories to
region.

BlueAnt Limited Global Warranty

This product is covered by BlueAnt's limited global warranty for one (1) year from the date
purchaser of the Product. Please refer to **warranty.blueantwireless.com** for full terms and

THANK YOU FOR CHOOSING A BLUEANT PRODUCT.

AUSTRALIAN CONSUMER LAW

Our goods come with guarantees that cannot be excluded under the Australian Consumer L
for a major failure and compensation for any other reasonably foreseeable loss or damage.
repaired or replaced if goods fail to be of acceptable quality and the failure does not amoun

For warranty and technical support please visit
www.blueantwireless.com
or call 1300 669 049

BlueAnt Wireless,
1-7 Weston St, Brunswick, Victoria, 3056, Australia

d waste. In some countries or regions,
ibit or restrict how such items are disposed of.
items. Contact your regional authorities for
any BlueAnt Approved Service Center for your

of purchase by the first consumer
conditions.

aw. You are entitled to a replacement or refund
You are also entitled to have the goods
t to a major failure.

BC

BlueAnt