SINGSATION™

CENTER STAGE FREESTYLE

ALL-IN-ONE KARAOKE SYSTEM

QUICK START GUIDE

FPO

For Video Setup Instructions, Scan Here!

Instructions en français 10
Instrucciones en español 19

Step 1: Unpack

Make sure the following items came in this package:

Center Stage base

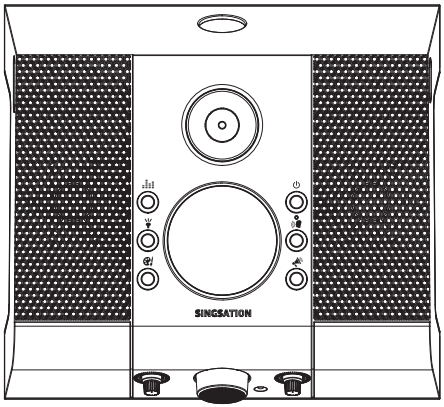

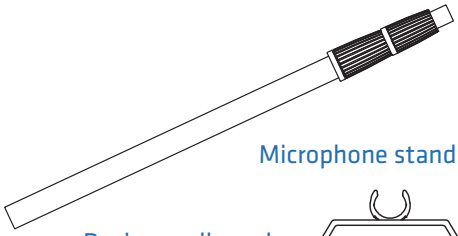

Microphone stand

Device cradle and locking knob

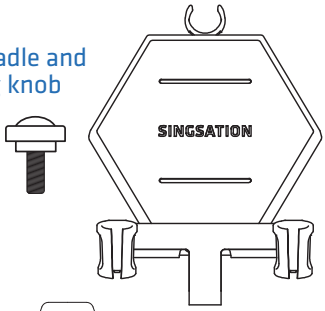

AC power adapter

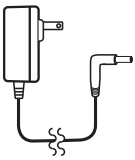

Remote control with pre-installed battery

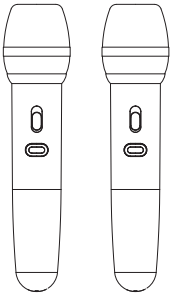

2 Wireless Microphones

Step 2: Remove the remote battery tab

Pull the battery tab out of the bottom of the remote. The battery will start powering the remote so you can use it.

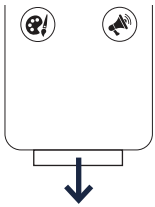

Step 3: Put it together

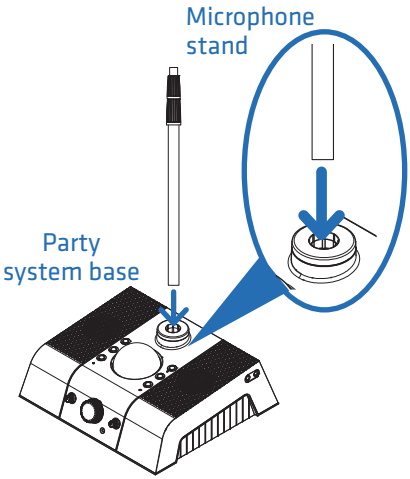

Insert the microphone stand into the center of the Center Stage base as shown here.

Screw the microphone stand clockwise into the base until it's fastened tight.

IMPORTANT: Make sure the microphone stand is tightened as much as it can be before proceeding.

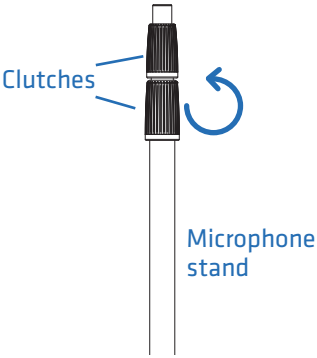

Adjust the height of the stand by turning each clutch counterclockwise and lifting the pole to the desired length.

Make sure to tighten each clutch (turn clockwise) before you proceed.

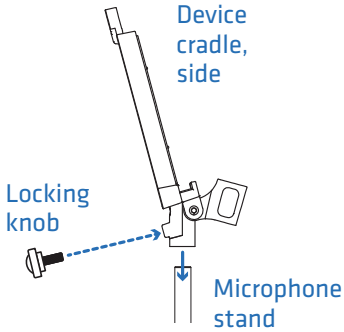

Attach the device cradle to the stand using the locking knob. Place the cradle on the top of the stand. Then insert the locking knob in the hole on the back of the device cradle and tighten it until the cradle feels secure. Do not overtighten!

Step 4: Plug in

Attach one end of the AC adapter to the DC jack on the left side of the Center Stage base.

Plug the other end of the adapter into a working outlet or surge protector.

Step 5: Turn on

Press and hold the ⏻ button on the top of the Center Stage base (or on the remote) to turn it on. The Center Stage plays its startup sound and the indicator below the ⏻ button starts blinking slowly.

After 15–30 seconds, the Center Stage announces "Pairing" and goes to Bluetooth pairing mode to set up with your Bluetooth device. The indicator below the ⏻ button starts blinking faster.

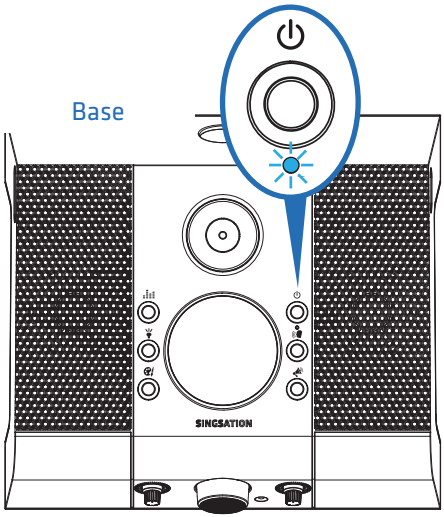

Step 6: Pair + Connect

Enable Bluetooth on your smartphone or other Bluetooth device.

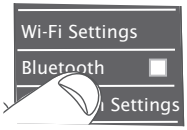

Make sure the indicator below the ⏻ button on the top of the Center Stage is blinking rapidly. (If it isn't, give a short double-press on the ⏻ button. The Center Stage announces "Pairing.")

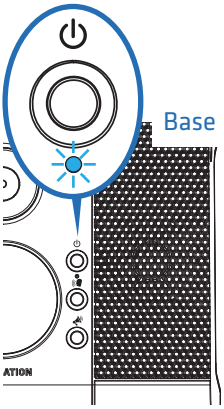

If you've previously paired your phone or other Bluetooth device with the Center Stage, it will automatically attempt to reconnect to that device when you switch it on. If you want to pair to a new device, give a short double-press to the ⏻ button. The Center Stage announces "Pairing" and the indicator below the ⏻ button starts blinking.

Choose **SINGSATION CENTER STAGE** from the pairing options on your Bluetooth device. (If it's not in the list, choose "Scan" from your device's Bluetooth menu.)

The Center Stage announces "Device Connected" when it's finished pairing and connecting to your Bluetooth device. The indicator below the ⏻ button turns solid blue.

Note: The process of enabling Bluetooth and connecting varies from device to device. See your device's owners manual for more information and specific instructions.

Bluetooth Wireless Connection Tips

- Make sure the Bluetooth capability of your device is turned on.
- Make sure there's nothing plugged into the Center Stage's (line in) jack when you're trying to use Bluetooth.
- The Bluetooth wireless connection works up to a range of roughly 33 feet (10 meters). This range may vary, however, based on other factors, such as room layout, wall material, obstacles, your device's Bluetooth performance, etc. If you're having problems connecting to the speaker, move closer to it.
- If your device asks you for a password to connect, use "0000".

Step 7: Install wireless mic batteries

The Center Stage comes with 2 wireless microphones you can use to sing along or make announcements! **Each microphone requires 2 AA batteries (not included).**

To install batteries in each microphone: Open the battery door on the back of the microphone by sliding it down. Insert 2 AA batteries in the battery compartment (make sure you follow the + and – diagrams in the compartment). Then slide the battery door back up until it clicks back into place.

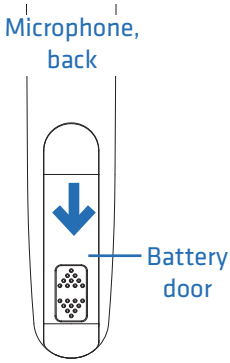

Step 8: Sing along!

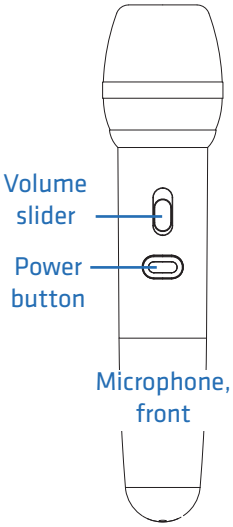

Center Stage, Front

To turn on a mic: Press the power button on its front. The mic automatically connects wirelessly to the Center Stage and its power button illuminates. (These buttons illuminate in different colors for each mic when you turn them on.) **IMPORTANT: Make sure the mic's volume slider is all the way up!**

To adjust the volume of your mic: Slide your mic's volume slider up or down.

To adjust the volume of both mics: Use the – + dial on the front of the Center Stage.

To adjust the volume of your music: Use the volume controls on your Bluetooth device.

To adjust the volume of everything: Use the **– +** knob on the front of the Center Stage, or press **+** or **–** on the remote.

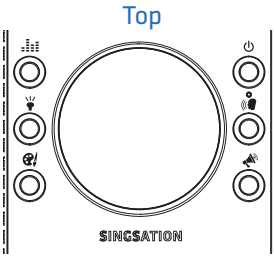

Using Voice/Sound Effects and EQ

To change voice effects: Press the button on the Center Stage or remote. Keep pressing to try all the effects!

To add/adjust voice echo: Use the − + dial on the front of the Center Stage

To use sound effects: Press the button on the Center Stage or remote. A single press plays the same effect again. Press and hold to change effects.

To adjust sound EQ: Press the button on the Center Stage or remote to cycle through the EQ settings (rock, vocals, and flat).

Using Dynamic Lighting

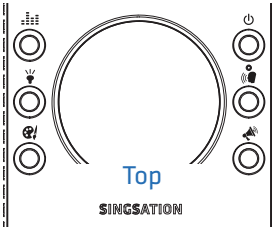

The (lighting) and (color) buttons on top of the Center Stage give you control over the built-in dynamic lighting, as do the same buttons on the remote. Press the button to cycle through the multiple lighting modes.

continues on the next page...

Tour of the Center Stage

Performer Center Stage Base

Top

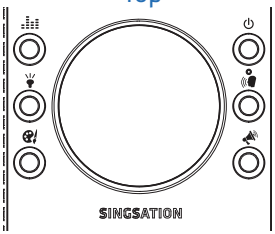

button cycles through the different EQ settings for the Center Stage (rock, vocals, and flat).

button turns the Center Stage on/off (press and hold) and puts it into pairing mode (short double-press when the Center Stage is on).

indicator illuminates when the Center Stage is on and shows the Bluetooth status of the Center Stage (solid is connected; fast flashing means pairing, and slow flashing means not connected). This indicator turns solid white when something is connected to the Center Stage's jack (line in).

button controls the speaker's multi-mode lighting. Press to cycle through the light modes. Press and hold to turn lighting off.

button cycles through the available voice effects.

button changes the color of the light in light modes where you can select color.

button plays one of the available sound effects. Press once to play the current effect. Press and hold to change effects.

Front

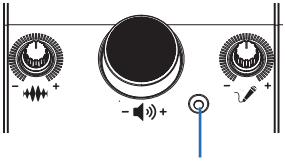

Remote control sensor

– + **dial** adjusts the amount of voice echo effect.

– + **dial** adjusts the Center Stage's volume.

Remote control sensor receives the commands from the remote control.

– + **dial** adjusts the volume of the microphone(s).

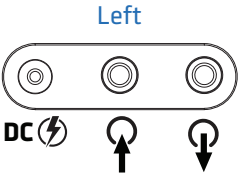

DC jack connects to the included power adapter to power the Center Stage.

jack lets you connect to an external audio device with a 3.5mm audio cable. The speaker switches automatically to this input when you insert the cable.

jack lets you connect to an external amplified speaker.

Remote

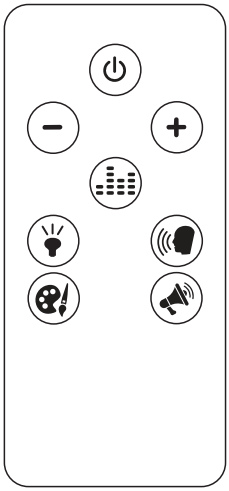

button turns the Singsation Center Stage on/off (press and hold) and puts it into pairing mode (short double-press when the Singsation Center Stage is on).

+ and – buttons increase/decrease the master volume.

button cycles through the different EQ settings for the Center Stage (rock, vocals, and flat).

button changes light effects.

button changes voice effects.

button changes light colors.

button plays one of the available sound effects. Press once to play the current effect. Press and hold to change effects.

Wireless Microphone

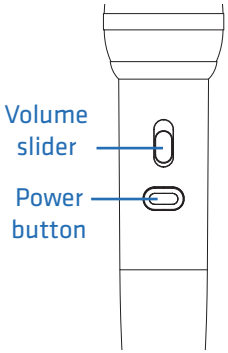

Volume slider adjusts the volume of each microphone.

Power button turns the wireless microphone on and connects it wirelessly with the Center Stage. This button illuminates when the mic is on.

If you have any questions about this product, visit SingsationKaraoke.com

Pour toute question concernant ce produit, visiter le site SingsationKaraoke

Si tiene preguntas sobre este producto, visite SingsationKaraoke.com

© 2023 Voxx Accessories Corp.
3502 Woodview Trace, Suite 220
Indianapolis, IN 46268