BreadCrumb® ES1 Version 11 User Guide

Model: BreadCrumb ES1
User Guide Version: 11.21 Rev A
Firmware Version: 11.21.0
Document Part Number: 03-100158-001

Corporate Headquarters:

Rajant Corporation
200 Chesterfield Pkwy
Malvern, PA 19355
Tel: (484) 595-0233
Fax: (484) 595-0244
http://www.rajant.com

Table of Contents

- Document Revision History
- Copyright Statement
- FCC, CE and Other Certification Statements
  - Antennas
  - Safety
  - Modifications
  - Professional Installation Attestation
  - Maximum Certified Power
- GNU General Public License Statement
- Preface
- 1. Introduction to BreadCrumbs
  - 1.1 What is a BreadCrumb?
  - 1.2 The Mesh Network
- 2. Description of a BreadCrumb ES1
  - 2.1 Radios
  - 2.2 Enclosure
  - 2.3 Antenna Connectors
  - 2.4 Power and Ethernet
  - 2.5 M8 Connector
  - 2.6 Status LED
  - 2.7 LED Configuration / Zeroize Keys and Restore Factory Defaults (Reset) Switch
- 3. Using BC|Commander
- 4. Deploying a BreadCrumb Mesh Network
  - 4.1 Addressing
  - 4.2 Channel Assignments
  - 4.3 Physical Placement and other Considerations
  - 4.4 Deployment Guidelines and Methodology
- 5. Firmware Upgrade and Zeroize
  - 5.1 Firmware Upgrade
  - 5.2 Zeroize
- 6. Troubleshooting
  - 6.1 Sporadic Network Connectivity
  - 6.2 BreadCrumb Device Cannot Connect to Mesh
  - 6.3 BreadCrumb Power and Start-Up Issues
- 7. Appendices
- Appendix A: Radio Channels and Frequencies
  - A.1 Radio: 2.4 GHz 802.11n
  - A.2 Radio: 5 GHz 802.11n
  - A.3 DFS and TPC
- Appendix B: Error and Warning Codes
- Appendix C: Ports and Protocols
- Appendix D: Installation Guidelines
  - D.1 Professional Installation Is Required
  - D.2 Safety
  - D.3 Modifications
  - D.4 Attaching Antenna Cables and Antennas
  - D.5 Grounding and Surge Protection
  - D.6 Waterproofing

D.7 Connecting Power
D.8 Configuration
D.9 Placement
Appendix E: Sealed RJ45 Assembly
E.1 Parts of the Male Sealed RJ45 Ethernet Connector
E.2 Choose the Correct Soft Plug
E.3 Pre-thread Before Termination
E.4 Terminate Cable with the Metal-Shielded RJ45 Plug
E.5 Test the Ethernet Cable
E.6 Preparation After Termination
E.7 Mate Inner and Outer Shells
E.8 Connect RJ45 to Female WAPV RJ45
E.9 Mate and Then Cap the WAPV
Appendix F: Mounting Instructions
F.1 Pole Mounting Bracket
F.2 DIN Rail Mounting Bracket
Appendix G: Technical Bulletins
G.1 Rajant Best Practices: Grounding and Surge Protection
G.2 Waterproofing Rajant BreadCrumb RF Connections
G.3 Waterproofing BreadCrumb Cable Connections
G.4 BreadCrumb Models Support Only Passive PoE
G.5 Never Apply Power to the Data Input Port of a Rajant Mid-Span Power over Ethernet (POE) Power Supply
G.6 Installation Constraints for Rajant AC Powered Accessory POE Power Supplies
Appendix H: Rajant End User License Agreement
Appendix I: GNU General Public License

Document Revision History

Revision	Date	Changes
11.21 Rev A	04/17/2019	Initial Document

Copyright Statement

Rajant, the Rajant logo, BreadCrumb, InstaMesh, BC|Commander, and Bring Your Network with You! are registered trademarks of Rajant Corp. in the United States and certain other countries.

Rajant's patented InstaMesh® networking software enables the network to quickly adapt to rapidly-deployed and moving network elements. U.S. Patents 9,001,645, US 9,001,645 B2, US 9,319,922 B2 and US 9,979,635 B2.

BreadCrumb® ES1 Version 11 User Guide

Copyright © 2009–2019 Rajant Corp. All rights reserved.

FCC, CE and Other Certification Statements

FCC ID (VJA-ES12450R)**:**

This equipment has been tested and found to comply with the limits for a Class A digital device, pursuant to Part 15 of the FCC Rules. These limits are designed to provide reasonable protection against harmful interference when the device is operated in a commercial environment. This device generates, uses, and can radiate radio frequency energy and, if not installed and used in accordance with this instruction manual, may cause harmful interference to radio communications. Operation of this device in a residential area is likely to cause harmful interference in which case the user will be required to correct the interference at their own expense.

Industry Canada (IC: 7382A-ES12450R):

This device complies with ISED licence-exempt RSS standard(s).

Operation is subject to the following two conditions:
1) This device may not cause interference
2) This device must accept any interference, including interference that may cause undesired operation of the device.

This product meets the applicable Innovation, Science and Economic Development Canada technical specifications. CAN ICES-3 (A)/NMB-3(A)

This device complies with Industry Canada license-exempt RSSs. Operation is subject to the following two conditions:
1) This device may not cause interference, and
2) This device must accept any interference, including interference that may cause undesired operation of the device.

Le présent appareil est conforme aux CNR d'Industrie Canada applicables aux appareils radio exempts de licence. L'exploitation est autorisée aux deux conditions suivantes:
1) l'appareil ne doit pas produire de brouillage;
2) l'utilisateur de l'appareil doit accepter tout brouillage radioélectrique subi, meme si le brouillage est susceptible d'en compromettre le fonctionnement.

Radiation Exposure Statement:
This equipment complies with IC radiation exposure limits set forth for an uncontrolled environment. This equipment should be installed and operated with minimum distance 20cm between the radiator & your body.

Déclaration d'exposition aux radiations:
Cet équipement est conforme aux limites d'exposition aux rayonnements IC établies pour un environnement non contrôlé. Cet équipement doit être installé et utilisé avec un minimum de 20 cm de distance entre la source de rayonnement et votre corps.

CE:

CE Declaration of Conformity may be requested from Rajant.

NOTE
Please refer to the product spec sheet at http://www.rajant.com for a list of certified model numbers.

Antennas

Antenna Installation WARNING
The installer should configure the conducted output power level according to country regulations and the applicable EIRP limit. Professional installation of equipment is required to ensure compliance with health and safety issues.

Required Antenna Separation

The antennas from any transceiver of the BreadCrumb ES1 may not be co-located with the antennas of any other transceiver. The co-location restriction is satisfied by maintaining 20 cm separation between the antennas of different tranceivers. There is no restriction for the separation between the antennas from the same transceiver, but testing at installation is recommended to verify the system performance that is achieved with a specific antenna deployment.

⚠ Warning
Because the BreadCrumb ES1 case is plastic, antennas should not be direct attached and should be attached only using antenna cables. This is to avoid stressing the plastic and compromising the IP67 ingress rating. Low loss cable such as LMR-400 is recommended for externally attached antennas.

⚠ Warning
For all BreadCrumb models, for installations that will experience vibration or shock, all antennas should be externally mounted and attached using cables. Low loss RF cable such as LMR-400 is recommended for cable attached antennas.

⚠ Warning
If a radio port is not required for a given application, the port should be disabled in software using BC|Commander, and a 50 Ohm terminator should be installed.

Figure: Incorrect Antenna Placement

⚠ IMPORTANT: Exposure to Radio Frequency Radiation
To satisfy FCC RF exposure requirements a minimum safe distance of 20 cm must be maintained between this device including antennas and all persons while the device is operating.

➔ DFS Additional Antenna Separation
For 5 GHz transceivers using channels that require DFS radar detection, it is recommended to mount each antenna for a DFS channel at least 2 feet from any other 5 GHz transceiver's antenna.

Safety

⚠ Warning
The BreadCrumb ES1 is not user serviceable. Repairs must be performed at a Rajant designated service center by trained personnel.

⚠ Warning
To protect the user against the risk of electric shock during high voltage transient events which may occur when this equipment is installed outdoors, protective earth grounding of the POE power supply is required. Case ground connections are provided on all Rajant supplied POE power supplies. The case

ground connections must be used and must be connected to a protective earth ground. Protective earth grounding operations must be performed by trained personnel, and according to local electrical codes and industry best practices, as well as Rajant's own recommendations.

Modifications

⚠ CAUTION
Changes or modifications not expressly approved by Rajant Corp. could void the user's authority to operate the equipment.

Rajant Products are compliant and warranted against manufacturing defects only so long as Rajant-authorized accessories are used in deployment of Rajant Breadcrumbs. It is the responsibility of the operator and the installer to ensure the system as installed operates within regional requirements.

Professional Installation Attestation

Rajant Corporation addresses the following items to ensure that the above referenced equipment is professionally installed:

The device will only be sold by Rajant Corporation or one of its authorized dealers. Rajant Corporation and its authorized dealers will be under strict marketing control and will only market and sell the device to professionals.

Professional installation is required for this device and will be performed only by someone knowledgeable of its use. Rajant Corporation will ensure that the device is only marketed and sold to professionals.

The device is not sold to the general public and is sold only for industrial or commercial use by professional installers.

⚠ CAUTION
To reduce potential radio interference to other users, the antenna type and its gain should be chosen so that the equivalent isotropically radiated power (EIRP) is not more than that permitted for successful communication.

Maximum Certified Power

ISM band radio modules may be operated at full certified power when configured with the granted antenna type. Operation of a radio at power levels that exceed the equivalent EIRP of the granted configuration is prohibited. See the tables below.

Table: Maximum Certified Power: FCC (United States), **IC** (Canada)

⚠ IMPORTANT
In Canada, a license is required to use channels in the frequency range 5150-5250 MHz (on models that offer these channels). The license may restrict transmit power. Licensing information may be found at http://www.ic.gc.ca/eic/site/smt-gst.nsf/eng/sf11294.html

BreadCrumb Model	Frequency Range (MHz)	Maximum Certified Total Conducted Channel Power (dBm)	Antenna Type	Antenna Gain (dBi)	Maximum Certified EIRP (dBm)
ES1-2450R	2412-2462	26 (Average)	Omni-directional	5	31
ES1-2450R	5180-5240	23 (Average)	Omni-directional	7	30
ES1-2450R	5745-5825	25 (Average)	Omni-directional	6	31

Table: Maximum Certified Power: CE (Austria, Belgium, Bulgaria, Croatia, Cyprus, Czech Republic, Denmark, Estonia, Finland, France, Germany, Greece, Hungary, Iceland, Ireland, Italy, Latvia, Liechtenstein, Lithuania, Luxembourg, Malta, Netherlands, Norway, Poland, Portugal, Romania, Slovakia, Slovenia, Spain, Sweden, Switzerland, Turkey, United Kingdom)

⚠ IMPORTANT: Regarding indoor-only frequencies
In regions where radio frequencies are regulated by ETSI (CE), the frequency range 5170-5350 MHz is restricted to indoor use only. Check local regulations before using these channels.

⚠ IMPORTANT
In many regions where radio frequencies are regulated by ETSI (CE), a license is required to use channels in the frequency range 5735-5835 MHz (on models that offer these channels). Check local regulations before using these channels.

BreadCrumb Model	Frequency Range (MHz)	Maximum Certified Total Conducted Channel Power (dBm)	Antenna Type	Antenna Gain (dBi)	Maximum Certified EIRP (dBm)
ES1-2450R	2412-2472	15 (Peak burst)	Omni-directional	5	20
ES1-2450R	5500-5700	24 (Average)	Omni-directional	6	30
ES1-2450R	5725-5875	26 (Average)	Omni-directional	6	32

- Electrostatic discharge (ESD) immunity testing compliant to EN 61000-4-2
- Electrical fast transient (EFT) / burst immunity testing compliant to EN 61000-4-4
- Surge immunity testing compliant to EN 61000-4-5

GNU General Public License Statement

Certain components of the Rajant BreadCrumb firmware are subject to the GNU General Public License Version 2, or other so-called open source licenses ("Open Source Software"). In compliance with the terms of certain Open Source Software licenses like the GNU General Public License Version 2 ("GPLv2"), Rajant makes certain modifications to Open Source Software that Rajant uses, modifies and distributes pursuant to such licenses available to customers in source code form upon request. You are free to use, modify and distribute Open Source Software so long as you comply with the terms of the relevant Open Source Software license. In particular, the GPLv2 is available in the appendix of this manual or at http://www.gnu.org/copyleft/gpl.html.

Preface

Purpose and Scope

This manual provides information and guidance to all personnel who are involved with and use Rajant Corporation's BreadCrumb ES1.

This manual begins with an introduction to the BreadCrumb Kinetic Mesh Network. It then characterizes the features of the BreadCrumb ES1. Finally, it describes common deployment scenarios and provides concise step-by-step instructions for each scenario.

> **Note**
> Throughout this document, unless otherwise stated, the terms ES1 and BreadCrumb are used to refer to Rajant BreadCrumb ES1.

How to Use This Guide

This User Guide is an HTML document and is read using a web browser. The browser's right scroll bar, mouse scroll wheel, up/down cursor keys or Page Up/Page Down keys may be used to navigate sequentially forward or backward through the guide. In most browsers, CTRL-F can be used to search the guide and navigate to matching text. The Table of Contents at the left (or top for small windows) contains links to the starts of chapters and appendices. After a web link or cross-reference is clicked in the guide, the browser's back arrow should return to the previous page location.

Feedback Welcome

The user of this manual is encouraged to submit comments and recommended changes to improve this manual and all Rajant products. Please send your feedback to feedback@rajant.com. Please be sure to include the version and revision number of the manual or product you are using as well as the relevant document section numbers if appropriate.

Related Documentation

For additional information, refer to these documents:

- BC|Commander® Version 11 User Guide: This document contains information on the BC|Commander management application, which is used to configure BreadCrumbs before or during a deployment.
- BreadCrumb® Video Guide
- Range Troubleshooting Guide
- BreadCrumb RF Guide
- BreadCrumb® Security Technical Brief

These documents are available in the support section of Rajant's website at http://www.rajant.com.

Note About Shared Guide Content

Rajant BreadCrumb models have some differences in hardware and software features. Rajant hardware and software product guides include some general content that is shared between guides and may include features or settings not found in every model. The following table summarizes the main differences between several standard BreadCrumb models.

Table: BreadCrumb Model Matrix

Features	LX5	ME4/KM3	ES1	JR2	JR3	SlipStream
Wireless Transceivers	3-4	2	2	1	1	0
Ethernet	2x 1000	1x 1000, 1x 100	1x 1000	1x 100	1x 100	2x 1000

Features	LX5	ME4/KM3	ES1	JR2	JR3	SlipStream
Input Voltage	18-48 VDC	8-48 VDC (ME4)/20-48 VDC (KM3)	9-30 VDC	8-30 VDC	9-30 VDC	12 VDC
Min. Recommended PoE	24-48 VDC, 26-33 W @ 24 V (3-4 radios, unheated)	24-48 VDC, 23 W @ 24 V	24 VDC, 19 W	24 VDC, 19 W	24 VDC, 19 W	(AC adapter)
USB	2	1	1	0	0	4
Serial	yes	yes(ME4)/no (KM3)	no	no	no	yes
Realtime Clock	yes	yes	no	no	no	yes
Case	metal	metal	plastic	metal	plastic	metal
Environment	IP67	IP67(ME4)/Indoor(KM3)	IP67	IP67	Weather Resistant	Indoor
Encryption	HW,SW	HW,SW	SW	SW	SW	SW (fast)
TRoIP	yes	yes	yes	no	no	yes
Modbus	yes	yes	yes	no	no	yes
SNMP	yes	yes	yes	yes	no	yes
Packet Capture	yes	yes	yes	yes	no	yes
Gateway Mode	yes	yes	yes	yes	no	yes
Performance Test	yes	yes	yes	no	no	yes
Max Peers per Transceiver	250+	250+	250+	150	50	0

Notes:

- Ethernet ports also adapt to standard slower speeds.
- Unless stated otherwise, all PoE wattages are @ 24 V.
- Add 2 W per heated radio and 2.5 W per powered USB peripheral.
- JR2 included TRoIP settings but no USB port for using TRoIP.
- Performance Test is a version 11.19+ feature
- KM3 is an indoor version of ME4.
- KM3 does not have a serial port.

1. Introduction to BreadCrumbs

Rajant Corporation's (http://www.rajant.com) BreadCrumbs utilize the 802.11 wireless networking standards to form a wireless mesh network. The network is mobile, self-integrating, self-meshing, self-healing, and secure. The focus is on flexibility, adaptability, and simplicity.

The BreadCrumb Kinetic Mesh Network is intended for rapid deployment of a broadband wireless network into a situation or "hot zone." The network can be deployed as a stand-alone wireless network, or bridged to another network (such as the Internet) utilizing available reach-back communication links (such as a DSL, cable, or satellite modem).

BreadCrumbs provide high bandwidth for applications to stream video, audio and data over large distances. The network traffic can be secured by using different security features available on the BreadCrumb. This makes the network optimal for tactical deployments as well as emergency response situations since it offers robustness, stability and ease of setup in mission critical activities.

1.1 What is a BreadCrumb?

A BreadCrumb is an IEEE 802.11 (Wi-Fi) and Ethernet compatible networking device with the ability to connect to other BreadCrumbs or networking devices to form a BreadCrumb network. The BreadCrumb is specifically designed for the following scenarios:

- **Temporary Wireless Networks:** Networks that must be established quickly and with minimal effort for short-term use (e.g., a network established to provide a temporary network in a tactical situation).
- **Mobile Wireless Networks:** Networks in which the network infrastructure itself is mobile, in addition to client devices (e.g., a convoy viewing a video stream from a UAV).
- **Wireless Network Extension:** Networks in which a wireless network must be quickly extended around or through obstacles that block wireless communications (e.g., urban canyon networks, tunnels/caves, etc.)
- **Wired Network Extension:** Networks in which two or more wired LANs at different locations must be connected wirelessly (e.g., to securely connect combat service support computers with logistics bases)
- **Any Combination of the Above:** Most BreadCrumb deployments include elements from more than one of the above scenarios.

In many cases, BreadCrumbs will perform all of these tasks as shipped with no configuration necessary at all, providing an instant TAN (Tactical Area Network). Moreover, because BreadCrumbs use industry-standard 802.11 communications, client devices such as laptops, or cell phones require no special hardware, software, and little or no configuration to access a BreadCrumb network.

> **Note**
> Although all BreadCrumbs can be access points, most access points do not provide mesh capability. Traditional access points simply allow wireless devices within range to connect to a wired network; they do not extend range through other access points.

1.2 The Mesh Network

The key component of a BreadCrumb Mesh network is the ability for BreadCrumbs to connect, or mesh with each other. While this is generally handled automatically by BreadCrumbs, complex deployment scenarios require a basic understanding of how BreadCrumbs establish and maintain a mesh.

1.2.1 Mesh – A Definition

A mesh is a collection of BreadCrumbs (or other network devices), each of which is linked to one or more other BreadCrumbs. Data can move between BreadCrumbs via these links, possibly passing through several intermediate BreadCrumbs before arriving at its final destination.

The intelligence of a BreadCrumb network is in how it adapts rapidly to the creation or destruction of the links in the mesh as devices are moved, switched OFF or ON, blocked by obstructions, interfered with by other devices, or otherwise affected. This adaptation takes place automatically and immediately as needed.

1.2.2 BreadCrumb Mesh Connections

In order for two BreadCrumbs to establish a mesh link to each other, they must be set to the same radio channel and have the same Network ID. The Network ID is computed from:

- Network Name (simply a configurable name for the network, default is “Rajant Mesh Network”)
- Network Key (a passphrase or key used for establishing mesh connections and obfuscating unencrypted network management traffic)
- Packet cipher setting
- MAC cipher setting
- Per-hop verification setting
- Key Sequence Number (defaults to 0)

To modify these settings via BC|Commander, the administrator must be logged in using the Crypto Officer credentials.

1.2.3 Compatibility with v10

It is possible to have a mesh with both v10 and v11 BreadCrumbs. This is useful while upgrading a network from v10 to v11. The following settings must be configured on the v11 BreadCrumbs in order to establish mesh links with v10 BreadCrumbs:

- Access Point: Enable Access Point must be checked, and Access Point: ESSID must match the primary ESSID of the v10 BreadCrumb on at least one radio of the same frequency. Version 10 firmware uses the BreadCrumb’s primary ESSID instead of the Network Name.
- Security: Version 10 Network Authentication Key and Security: Version 10 Network Encryption Key must match the NAK and NEK of the v10 BreadCrumb. Both v10 and v11 have the same default values.
- InstaMesh: Enable v10 Compatibility must be checked.

Note
Because the crypto settings between v10 and v11 are different, the v10 Compatibility mode will only work if ALL crypto settings are disabled on both the v10 and v11 BreadCrumbs.

2. Description of a BreadCrumb ES1

BreadCrumb ES1 is a portable, wireless device for use in indoor, protected and outdoor locations. It is light in weight, supports up to 4 external antennas and is designed to be completely mobile. The BreadCrumb ES1 must be powered by an external passive PoE (Power Over Ethernet) source.

2.1 Radios

The BreadCrumb ES1 contains two radios. There are different models of ES1, each with a different combination of radios. See Appendix Radio Channels and Frequencies for a list of the channels and frequencies supported by each of the radios.

2.2 Enclosure

The ES1 enclosure has been designed for IP67 ingress protection against ingress of dust and water when installed with the approved mating connectors.

For information on the approved BreadCrumb ES1 sealed male Ethernet connector and cables, see Ethernet Connector.

For information on the approved BreadCrumb ES1 sealed protective cap and male M8 cables, see M8 Connector.

The ES1 enclosure is made of plastic (ASA UL94-HB).

> **⚠ Notice**
> Must be installed with the approved mating connectors. Ingress protection rating may be adversely affected due to exposure to direct sunlight for extended periods. Excessive shock and vibration, temperature extremes or fluctuations may void the manufacturer's warranty.

2.2.1 Enclosure Dimensions

The dimensions of the ES1 are 155 mm x 149 mm x 41 mm (6.079 inches x 5.830 inches x 1.575 inches) including all built-in features of the enclosure. This measurement does not include any antennas, cables or mating sealed Ethernet connector. The weight of the ES1 is 437 g +/- 10 g (15.4 oz +/- 0.4 oz) (weight depends on transceiver configuration).

Figure: BreadCrumb ES1 Measurements in Inches (1 in = 2.54 cm)

Note: The BreadCrumb ES1 is shown with a mating sealed Ethernet connector attached.

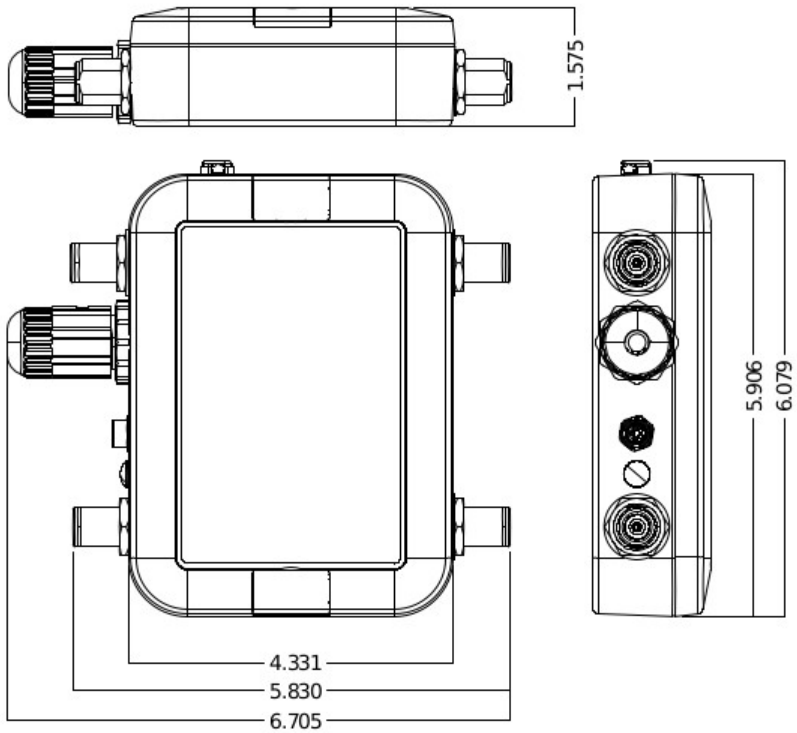

2.2.2 Enclosure Front

The external features of the ES1 enclosure are shown in the following images.

The following figure shows a four-antenna ES1 model. A model that needs only three antennas will have three antenna connectors instead of four.

Figure: BreadCrumb ES1 Enclosure Front

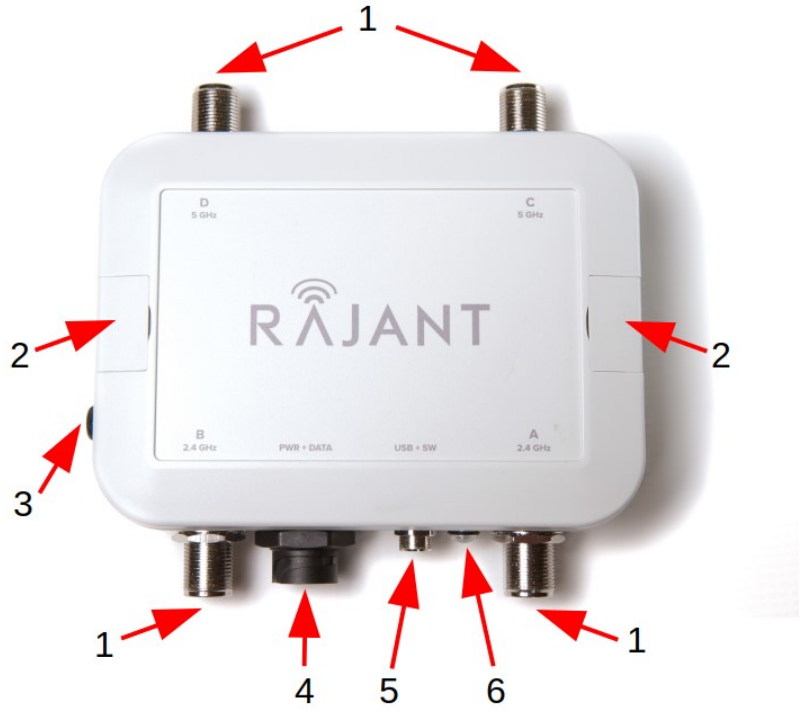

(1) Up to four type N female antenna connectors

(2) Two flip-open accesses to mounting holes

(3) Protective vent

(4) ETH0 RJ45 female, receives power via Ethernet Passive PoE

(5) 5-pin female M8 connector for USB (and optionally reset) adapter cables

(6) Status LED

2.2.3 Enclosure Bottom

The bottom of the BreadCrumb ES1 enclosure contains most of the features.

Figure: BreadCrumb ES1 Enclosure Features (Bottom)

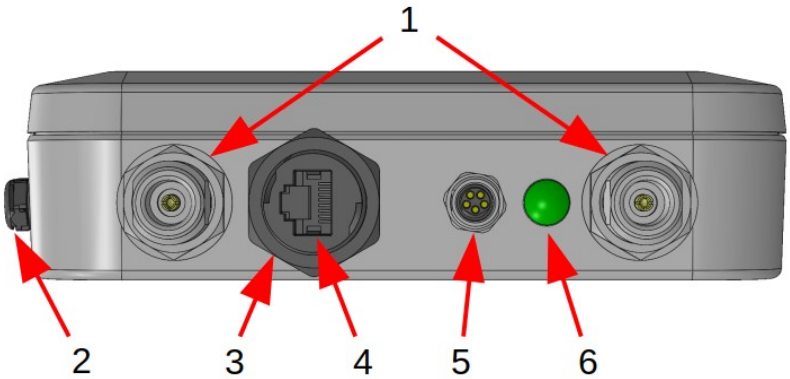

(1) Two (of up to four) type N female antenna connectors

(2) Protective vent

(3) Built-in half of sealed Ethernet connector

(4) ETH0 RJ45 female, receives power via Ethernet Passive PoE

(5) 5-pin female M8 connector for USB (and optionally reset) adapter cables

(6) Status LED

2.3 Antenna Connectors

The BreadCrumb ES1 provides up to four Type N female antenna connectors. Two antenna connectors are located on the top of the enclosure and two on the bottom of the enclosure (see the *Enclosure Features (Front)* figure above). Many BreadCrumb radios offer antenna diversity or Multiple-Input and Multiple-Output (MIMO) features, in which case two antenna ports per radio are utilized. Some radios only utilize one antenna port. Each antenna connector will be labeled with a unique letter (A, B, C or D) and the frequency of its corresponding radio.

Required Antenna Separation

The antennas from any transceiver of the BreadCrumb ES1 may not be co-located with the antennas of any other transceiver. The co-location restriction is satisfied by maintaining 20 cm separation between the antennas of different tranceivers. There is no restriction for the separation between the antennas from the same transceiver, but testing at installation is recommended to verify the system performance that is achieved with a specific antenna deployment.

⚠ Warning

Because the BreadCrumb ES1 case is plastic, antennas should not be direct attached and should be attached only using antenna cables. This is to avoid stressing the plastic and compromising the IP67 ingress rating. Low loss cable such as LMR-400 is recommended for externally attached antennas.

⚠ Warning
For all BreadCrumb models, for installations that will experience vibration or shock, all antennas should be externally mounted and attached using cables. Low loss RF cable such as LMR-400 is recommended for cable attached antennas.

⚠ Warning
If a radio port is not required for a given application, the port should be disabled in software using BC|Commander, and a 50 Ohm terminator should be installed.

➲ DFS Additional Antenna Separation
For 5 GHz transceivers using channels that require DFS radar detection, it is recommended to mount each antenna for a DFS channel at least 2 feet from any other 5 GHz transceiver's antenna.

Figure: Incorrect Antenna Placement

Most of Rajant's standard antennas are characterized by high-gain and therefore small vertical beamwidth. Antennas in fixed locations should be installed plumb and at the same elevation so that BreadCrumbs using these antennas will see each other without a significant loss of signal strength.

⚠ Warning
To avoid possible damage to the BreadCrumb radio(s), always connect or disconnect external antennas with the power to the BreadCrumb turned off.

The following table lists the radio band and antenna port(s) for each wlan of current and recent BreadCrumb ES1 models. This information is also available in the Details panel of BC|Commander.

Table: BreadCrumb ES1 Radios and Antenna Ports

Model Number	wlan0	wlan1
ES1-2450R	2.4 GHz: A+B	5 GHz: C+D

2.4 Power and Ethernet

The BreadCrumb ES1 has one RJ45 Ethernet port. The Ethernet port (ETH0) on the BreadCrumb ES1 supports 10 Base-T, 100 Base-TX or 1000 Base-T configuration. The port supports Auto MDI/MDIX allowing the use of either straight-through or crossover data cables for connections. The data interface includes

electrostatic discharge, and electrical fast transient/burst immunity compliant to the IEC 61000-4-2, and IEC 61000-4-4-EFT standards, respectively.

For more information on the BreadCrumb ES1 sealed Ethernet connector, see Ethernet Connector.

2.4.1 Power Requirements

The BreadCrumb ES1 ETH0 port supports Passive Power over Ethernet (Passive PoE), and therefore acts as a dual function Ethernet and DC power input port for the BreadCrumb ES1. An external inline passive PoE injector is used to merge DC power for the BreadCrumb ES1 with data from a LAN port or a wired client.

The average idle power consumption of a BreadCrumb ES1 is 2.8 W at 24 V. The maximum peak power consumption of BreadCrumb ES1 is 15 W at 24 V. Up to 2.5 W of additional power will be needed if a peripheral is being powered by USB (500 mA at 5 V is available at the USB port).

To ensure proper operation of the BreadCrumb ES1, the inline injector must output a DC voltage between 9 VDC to 30 VDC. Rajant recommends a minimum power supply of 19 W @ 24 VDC. Using a higher output voltage facilitates longer cable runs between the inline injector and the ETH0 port on the BreadCrumb ES1. For details on Rajant's VHDC-Series power accessories, please refer to the VHDC-Series spec sheet.

Table: BreadCrumb ES1 Power Requirements (Passive PoE)

Input Voltage	Avg Idle Usage @ 24 V	Max Peak Usage @ 24 V
9 - 30 VDC	2.8 W + USB usage	15 W + USB usage

Table: BreadCrumb ES1 Power Supply Options

Model	Rajant Part Number	Type	Output Voltage (V)	Max. Output Current (A)	Ethernet Link Speed (Mbps)	Environmental
TP-POE-24G	25-100168-001	AC to DC	24	0.8	10/100/1000	Non-sealed
TP-POE-HP-24G	25-100168-002	AC to DC	24	1.5	10/100/1000	Non-sealed
VHDC-24V-50W	01-000029-01	DC to DC	24	2.08	10/100	Sealed (IP67: dust-tight, waterproof)
VHDC-24V-50W-GbE	01-000037-002	DC to DC	24	2.08	10/100/1000	Sealed (IP66: dust-tight, water-resistant)
VHDC-24V-50W-LC	01-000033-01	DC to DC	24	2.08	10/100	Non-sealed

⚠ Warning
The BreadCrumb ES1 cannot be powered with a 48 V PoE power supply. Using a PoE of higher voltage than the stated ES1 voltage range may damage the ES1 and void the warranty.

Additional information about Rajant power supply accessories can be found in the Power Accessories product spec sheet at www.rajant.com.

2.4.2 PoE Power Supply Usage

The laptop in these diagrams could instead be a non-PoE switch port connecting the BreadCrumb to a LAN.

Figure: BreadCrumb ES1 Ethernet and Passive PoE AC Connections

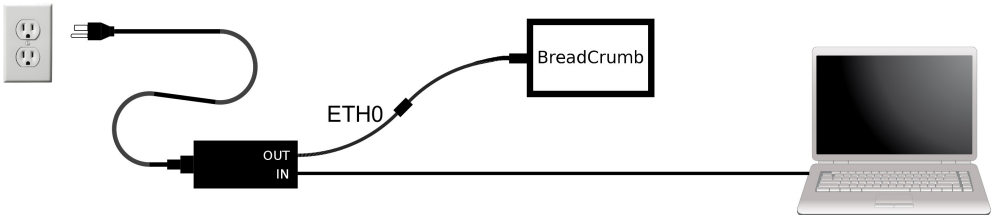

Figure: BreadCrumb ES1 Ethernet and Passive PoE DC Connections

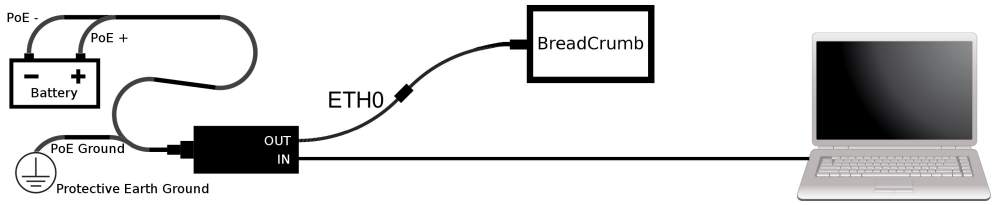

Proper Use of PoE Power Supply

1. Disconnect power from PoE power supply
2. Connect PoE *Out* to BreadCrumb using shielded Ethernet cable
3. (Optional) Connect PoE *In* (aka *Data*) to a computer or a non-powered LAN Ethernet port
4. Reconnect power to PoE power supply

⚠ Warnings: Regarding PoE Power Supply Connections

Unlike active PoE methods such as IEEE 802.3af/at, passive PoE does not include any kind of handshaking or voltage checking.

- Only connect the passive PoE power supply Output to the BreadCrumb. The output power over Ethernet can damage other devices and may damage the PoE power supply.

- Never connect the passive PoE power supply Output to an Ethernet port that supplies PoE power. This can damage equipment and may cause a fire. The Output should only be connected to the BreadCrumb.

- Never connect the passive PoE power supply Input to an Ethernet port that supplies PoE power. Applying power to the PoE Input can damage the PoE power supply. For more information see the *Technical Bulletins* Appendix document: Never Apply Power to the Data Input Port of a Rajant Mid-Span Power over Ethernet (POE) Power Supply.

- If you choose to connect a Rajant passive PoE-supporting BreadCrumb to an active PoE switch, you must first turn off the PoE capability of that switch port. For more information see the *Technical Bulletins* Appendix document: BreadCrumb Models Support Only Passive PoE.

- Unsealed PoE power supplies are for indoor use only.

Please note that Rajant warranty protection does not cover any damage caused by misuse of power supplies or by use of third-party power supplies.

⚠ Warning
In order to avoid sparking and possible damage to the unit, connect the powered Ethernet Output cable to the BreadCrumb before applying power to the power supply.

⚠ Warning
To protect the user and the equipment against the risk of electric shock during high voltage transient events which may occur when this equipment or its antennas are installed outdoors, protective earth grounding of the POE power supply is required. Case ground connections are provided on all Rajant supplied POE power supplies. The case ground connections must be used and must be connected to a protective earth ground. Protective earth grounding operations must be performed by trained personnel, and according to local electrical codes and industry best practices, as well as Rajant's own recommendations.

For more information on physical installation, grounding, waterproofing connections, see Installation Guidelines and the Appendix Technical Bulletins.

2.4.3 Ethernet Connector

The Ethernet port on the BreadCrumb ES1 enclosure is the female part of a Genesis Technology sealed Ethernet connector. In a protected enviroment such as indoors or inside a 3rd party enclosure, a standard RJ45 male shielded cable may be connected to this port. Elsewhere, the correct sealed mating connector must be used. The mating (male) part is Genesis Technology WAPV-100-AKY0T.

Figure: WAPV-1X00-AKY0T Sealed Ethernet Connector

Instructions for assembling the male sealed RJ45 connector on an unterminated shielded CAT5e or CAT6 Ethernet cable are found in the following Appendix:
Sealed RJ45 Assembly.

Note: Premade Ethernet Cables
Ethernet cables prebuilt with this connector may be purchased from Rajant (P/N: 06-1000068-030, ES1 cable, Ethernet, Cat5e shielded, Outdoor gland, 30ft).

2.5 M8 Connector

The BreadCrumb ES1 includes a 5-pin female M8 connector which provides pins to support one USB 2.0 interface and a physical Reset button (e.g. an LED Configuration / Zeroize Keys and Restore Factory Defaults Switch).

The ES1 M8 connector is normally covered by a screw-in plastic protective cap. To remove the plastic M8 protective cap, unscrew it counter-clockwise. To re-install the M8 protective cap, screw it in clockwise.

Note

Do not lose the M8 plastic screw-in protective cap. The ES1 M8 connector is only protected from water if the protective cap is screwed in or if a Rajant ES1 M8 adapter cable is properly installed. The protective cap is Finecables Enterprise Co. Ltd. part number PCNM8x1.0-2.

A custom ES1 M8 male to USB 2.0 female adapter cable (shown below) provides a female USB A 2.0 port (Rajant p/n 06-100069-001).

Figure: ES1 M8 Male to USB 2.0 Female Adapter Cable

A custom ES1 adapter cable (shown below) from M8 male to both a female USB A 2.0 port and a Reset button is also available from Rajant (Rajant p/n 06-100069-002).

Figure: ES1 M8 Male to USB 2.0 Female and Reset Button Adapter Cable

2.5.1 M8 Connector Diagrams

In the following three diagrams, the M8 connector on the bottom of the BreadCrumb ES1 enclosure is viewed with the front of the ES1 up and the bottom of the ES1 facing the user.

Figure: M8 5-pin Female (ES1 Enclosure Bottom)

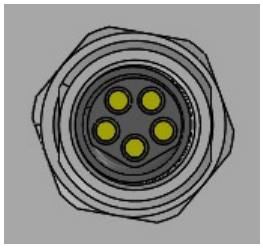

Figure: M8 5-pin Female w/ Recessed Key Highlighted (ES1 Enclosure Bottom)

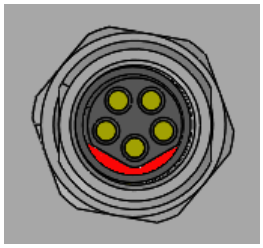

The male M8 connector of the ES1 M8 5-pin male to USB 2.0 female adapter cable has the matching angular key, shown at the top of the connector in the photo below:

Figure: M8 5-pin Male (ES1 Adapter Cable)

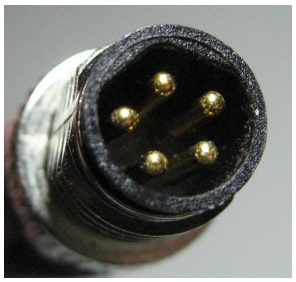

Rajant ES1 M8 adapter cables use a connector similar to this molded straight shielded 5-pin male connector from Finecables Enterprise Co. Ltd., for example MA08MSBF05STXXYB25, where XX is cable length and Y is “C” for PVC or “R” for PUR cable jacket.

2.5.2 Connecting ES1 M8 Adapter Cable

Use the following steps to connect an ES1 M8 adapter cable:

- Turn off power to the BreadCrumb ES1’s power supply.
- It is difficult to visually line up the M8 keys, so instead do it by feel. Gently press the cable’s M8 male connector against the enclosure’s M8 female connector and rotate the male connector until you feel it move slightly into the female connector.
- While pressing the M8 male connector toward the female connector, turn the M8 male connector’s threaded metal collar clockwise to catch the first thread. Once the threads have been engaged, the connection should be more stable.
- Repeat these two steps until fully connected:
  - Turn the M8 male connector’s threaded metal collar clockwise to thread it further into the enclosure’s female connector.
  - Press the M8 male connector further into the female connector.
- When the adapter cable is fully connected, power may be reapplied to the ES1 power supply.

Tip
The optional USB and Reset adapter cable has thicker molded plastic and a threaded collar that is harder to turn. You may need to remove an antenna or antenna cable to get a good grip on the collar and install this cable.

Figure: ES1 M8 to USB Adapter Cable - Connected

Important
The male M8 connector of the adapter cables is a sealed connector when properly installed. Taping is still recommended for outdoor installations. The USB 2.0 connector of the adapter cable is not sealed and therefore any USB connection must be taped against water ingress. The reset button of the available USB/reset adapter cable is not sealed. When the M8 port is not being used, replace the M8 protective cap by screwing it in clockwise.

2.5.3 Enclosure M8 Pinout

The following details the pinout of the M8 5-pin female connector on the bottom of the ES1 enclosure.

Figure and Table: BreadCrumb ES1 M8 5-pin Female Pinout

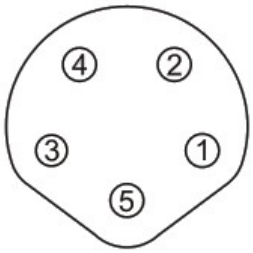

Pin	Signal
1	USB 5 V +
2	USB DATA -
3	GND
4	USB DATA +
5	Reset Switch

2.5.4 USB

The BreadCrumb ES1 contains one USB 2.0 interface on the pins of its 5-pin M8 connector.

The port is compliant to the Enhanced Host Controller Interface (EHCI) and USB Transceiver 2.0 Macrocell Interface (UTMI+) Level 2 specifications. The port supports all three standard data transfer rates of low speed (1.5Mbps), full speed (12Mbps), and high speed (480Mbps). The power switch for the port includes over current protection, thermal protection, in-rush current limiting, and hot-plug noise filtering.

The USB port can be used to perform BreadCrumb firmware upgrades and USB-based zeroize (or alternately, these actions can be accomplished via software using BC|Commander). The USB port can also interface to an optional GPS receiver accessory available from Rajant.

2.6 Status LED

The Status LED is capable of displaying warning and error codes, and link states. The LED Mode can be configured in BC|Commander to be ON (switchable), ALERTS ONLY (switchable), OFF (non-switchable), or OFF (switchable). When the LED Mode is ON, the BreadCrumb LED alternates between displaying the link state and any warnings or errors. When the LED Mode is OFF, the BreadCrumb LED does not display any warnings, errors, or the link state. When the LED Mode is set for ALERTS ONLY, the BreadCrumb LED alternates between displaying the link state and any warnings or errors only if there are warnings or errors to report. If there are no warnings or errors, the LED displays nothing.

The Status LED combines the three base colors of red, green and blue to display a broader spectrum of colors which indicate the current status of a BreadCrumb. The meanings of the color code indicators are given in the following table.

Table: Status LED Color Codes

Color	Status
White (red, green and blue LEDs together; may appear pale blue or pale green)	Powered on; start of boot process
Red-Blue-Green scrolling in succession	End of successful boot process
Solid Blue	Ready, but no connected Mesh peers (unit may have Ethernet peers)

Color	Status
Blinking Green	At least one connected Mesh peer; all peers are connected at less than 24 Mbps
Solid Green	At least one connected Mesh peer; one or more peers are connected at 24 Mbps or faster
Blinking Yellow (with short and long pauses between blinks)	Numeric warning code
Blinking Red (with short and long pauses between blinks)	Numeric error code
Blinking Yellow (blinking at an increasing rate)	BreadCrumb is in the process of installing firmware
All LED colors scrolling in rapid succession (with a short pause between every cycle)	Successful firmware installation; ready to reboot
All LED colors scrolling in rapid succession (with no pause)	Identify mode is ON

Note: If the BreadCrumb configuration setting *InstaMesh.. Advanced.. Enable Live Trace to Gateway* is set, then the connectivity-related behavior of the blue and green LEDs is modified as follows:

- Solid Blue: No path to gateway, or there is no gateway configured
- Solid Green: Low InstaMesh cost to gateway
- Blinking Green: High InstaMesh cost to gateway

For more information on BreadCrumb Status LED numeric codes see Appendix Error and Warning Codes.

2.7 LED Configuration / Zeroize Keys and Restore Factory Defaults (Reset) Switch

⚠ Important
The BreadCrumb ES1 Zeroize aka Reset switch is available via a Rajant adapter cable for the ES1 M8 port. On a running BreadCrumb, the features of this switch are also available over the air using the BC|Commander application BreadCrumb menu and BreadCrumb configuration settings.

The LED Configuration / Zeroize Keys and Restore Factory Defaults Switch (see the *Enclosure Right* figure) has two modes of operation. The modes are set by the length of time the switch is asserted. The modes are:

- LED Configuration
- Zeroize Keys and Restore Factory Defaults (Reset)

2.7.1 LED Configuration

This mode is used to control the display states of the Status LED. The LED Configuration function is accessed by pressing the switch and releasing it after a two second hold. The configured display state of the Status LED is dictated by the LED Mode setting that is configured from BC|Commander (please refer to the *BC|Commander Version 11 User Guide* for a more detailed description of the LED Mode setting). The user can toggle between the configured state and an alternate state of the Status LED by pressing the switch and activating the LED Configuration function.

The following table lists the possible configured and corresponding alternate display states of the Status LED.

Table: Configured and Alternate Display States of the Status LED

Configured State	Alternate State

Configured State	Alternate State
On	Off
Off	N/A
Alerts Only	On
Off (switchable)	On

Note that state changes can occur only between options in the same rows of the table above. For example, it is possible to toggle the state back and forth between Alerts Only and On, but not between Alerts Only and Off. Transitioning from Alerts Only to Off would require changing the LED mode setting in BC|Commander.

The default LED Mode for the BreadCrumb ES1 is On.

Note
There are two different configurable Off states: Off (switchable), which toggles to On, and Off (non-switchable), which has no alternate state. If the LED Mode is set to Off (non-switchable), the Configuration Switch will NOT turn it on.

2.7.2 Zeroize Keys and Restore Factory Defaults (Reset)

Note
The BreadCrumb Zeroize aka Reset switch defaults to a quicker “Reset Config” that clears all configuration but retains logs. The type of Zeroize operation performed by the button is controlled by a configuration setting in the BreadCrumb (in General… Physical Buttons).

This mode is used to erase the security protocol keys of a BreadCrumb and to restore its software configuration to the factory default state. To operate this switch follow these procedures:

- Ensure that the BreadCrumb is powered on, has fully booted-up and its Status LED color is green or blue.
- Press and hold the switch until the Status LED changes to blinking yellow (approximately 10 seconds), then release the switch.
- On a full Zeroize operation, the Status LED will flash the yellow warning code “321” (BreadCrumb is being zeroized) then flash rapidly yellow. This indicates that the Zeroize Keys and Restore Factory Defaults operation has been initiated and is in progress.
- On a full Zeroize operation, the Status LED should flash the red error code “32” (BreadCrumb has been zeroized). This error code will flash for up to 30 seconds.
- The BreadCrumb will then automatically reboot using the factory default configuration.

See Appendix Error and Warning Codes for a description of blinking LED numeric codes.

Warning
Do NOT turn off or reboot a BreadCrumb that is being zeroized. An interruption to power during the zeroization process can result in the BreadCrumb being unable to boot properly.

Tip
The process of zeroizing keys and restoring factory defaults can also be performed remotely with the BC|Commander management software or with a properly prepared USB drive. For more information, refer to the *BC|Commander Version 11 User Guide*.

For a list of error and warning codes refer to Appendix Error and Warning Codes.

3. Using BC|Commander

BC|Commander is Rajant's BreadCrumb administration software package used for monitoring the status of BreadCrumbs and mesh links. BC|Commander is also used for configuring BreadCrumbs, upgrading BreadCrumb firmware, and graphically displaying the network topology.

BC|Commander can be run on any computer that has access to the BreadCrumb network. Versions of the software package are available for Microsoft Windows® or Linux.

BC|Commander includes an option called v10 Compatibility Mode. This allows a user to run a mixture of BreadCrumbs with both version 10 and version 11 firmware within the same mesh network. This is very useful when BreadCrumbs in a very large network are being upgraded from version 10 to version 11 firmware.

Rajant periodically releases updated BC|Commander software. The updated software must be obtained from Rajant. Refer to Rajant's most recent BC|Commander Version 11 User Guide for instructions on how to install the latest version of BC|Commander on your computer and how to use BC|Commander with Rajant's BreadCrumbs.

⚠ Important
It is recommended that the BC|Commander version used be equal to or greater than the firmware version running on any administered BreadCrumbs in order to administer all BreadCrumb firmware features covered in Rajant's BC|Commander Version 11 User Guide.

➔ Note
Some portions of the BC|Commander Version 11 User Guide assume a working knowledge of TCP/IP networking, including DHCP, NAT and DNS. While the network lay person may be able to perform some mesh network management tasks, it is recommended that network configuration be performed by experienced network administrators.

4. Deploying a BreadCrumb Mesh Network

There are many factors which need to be taken into account when deploying a BreadCrumb mesh network. This chapter describes the addressing scheme of the mesh, channel assignments and some of the most commonly occurring environmental factors that will have a major impact on the performance of the mesh. The final section details guidelines and methodology needed to follow when deploying the mesh.

For information on physical installation, grounding waterproofing connections, see Installation Guidelines and the Appendix Technical Bulletins.

4.1 Addressing

When in gateway mode or when using its own embedded DHCP servers, the BreadCrumb mesh requires that wireless devices use IPv4 addresses in the Class A network 10.0.0.0/8 (that is, any address that begins with '10.'). If you are not connected to another network, or if you are bridging to one rather than routing to it, your wireless client devices may have any address whatsoever.

> **Note**
> Any computers running the BC|Commander management application must have an address in the same range as the BreadCrumbs they manage. Refer to the BC|Commander Version 11 User Guide document for the details of the BreadCrumb IP address configuration.

4.1.1 BreadCrumb Device Addresses

Each BreadCrumb radio has one IPv4 address in the Class A network 10.0.0.0/8. Rajant ensures during manufacturing that the default addresses are not duplicated between any two BreadCrumb devices. Addresses assigned to BreadCrumb devices can be viewed using BC|Commander. They can be configured manually, or set to DHCP.

4.1.2 DHCP

Each BreadCrumb device includes an embedded DHCP server. You may safely enable the DHCP servers of multiple BreadCrumb devices simultaneously. Address conflicts among DHCP clients are prevented by using the unique BreadCrumb device addresses assigned at the factory as a base.

A BreadCrumb device determines its DHCP range as follows:

- Start with the first three bytes of the BreadCrumb's IPv4 address.
- Add a low-byte range of 10 to 210.

4.2 Channel Assignments

BreadCrumb radios have default channels assigned, based on the frequency and type of the radio. See the following table for a list of radio frequencies and their default channel assignments. When more than one radio of the same frequency is present, there may be default channels for the additional radio(s). This table includes radios that may be found in different BreadCrumb models, not one specific model.

Table: Default Channel Assignments

Radio Card Frequency and Type	Default Channel	Second Default	Third Default
900 MHz 802.11g	5		
2.4 GHz 802.11n	11	1	
2.4 GHz 802.11g	11	1	
4.8 GHz 802.11a	164	184	174

Radio Card Frequency and Type	Default Channel	Second Default	Third Default
4.9 GHz 802.11a	20		
5 GHz 802.11a	153	161	
5 GHz 802.11n	FCC:157, CE:136	FCC:149, CE:100	
Dual band 2.4/5 GHz 802.11n	11 (2.4 GHz)		

In some cases, it may be necessary to manually set the radios to specific channels to provide critical links within a mesh. This can be especially important when using single-radio BreadCrumb devices. Refer to the BC|Commander Version 11 User Guide for the details of BreadCrumb channel configuration.

4.3 Physical Placement and other Considerations

Commonly occurring environmental factors have a significant impact on performance and behavior of the BreadCrumb Wireless Network. Line-of-sight (LOS) obstructions, distance, weather, and device placement should all be considered when deploying a wireless network.

IEEE 802.11 wireless operation degrades gradually as distance increases between nodes or as interference becomes prominent. This manifests as a data rate reduction between nodes.

The goal in planning and deploying a BreadCrumb mesh network is to maximize both coverage and the data transfer rate between devices. These can be maximized by taking into consideration all of the contributing factors described in this section.

4.3.1 Line-of-Sight

Unobstructed line-of-sight (LOS) is critical for optimal performance of the mesh. Partial LOS obstruction results in noticeable network performance degradation. Total LOS obstruction can result in complete loss of network connectivity.

Elevating the device and external antenna will assist in providing better LOS. This can allow the radio waves to propagate over some possible obstructions.

Unobstructed LOS is not necessary from every BreadCrumb device and wireless client to every other BreadCrumb device and wireless client. However, each device must have unobstructed LOS to the previous and subsequent device.

Client connectivity will degrade and drop if LOS to a BreadCrumb device can not be maintained.

Fresnel Radius

The *Fresnel Radius* column in the *Peers* tab of *BC|Commander* (11.9 or later) can be helpful in determining where antennas must be placed for the wireless signal to sufficiently clear any obstacles between two BreadCrumbs. Obstacles include buildings, trees, vehicles and the ground. The “r” in the figure below represents the radius of the first Fresnel Zone at a point halfway between the two BreadCrumbs. When the configuration settings of two peered BreadCrumbs include their correct latitude and longitude, the *Fresnel Radius* column will contain the value of “r” for those two peers. The greater the distance between BreadCrumbs, the larger the value of “r” will be. Rajant recommends that antennas are placed to achieve at least 60% and ideally 80% first Fresnel Zone clearance in all directions. For obstacles that are closer to one BreadCrumb than its peer, or BreadCrumb antennas with unmatched elevations, or placements affected by the curvature of the Earth, use a Fresnel Zone calculator that includes obstacle distance and other factors.

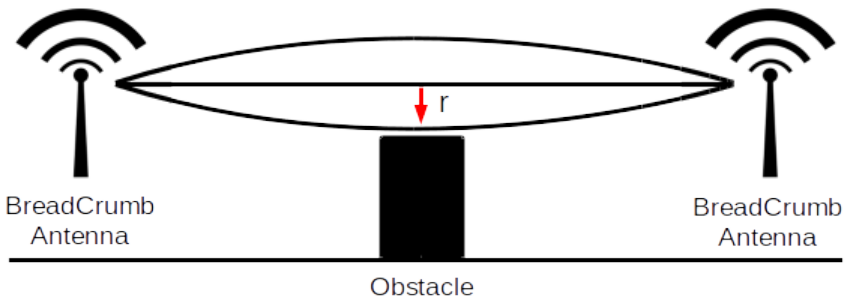

Antenna Tuning

BC|Commander version 11.9 and higher, when viewing the Live Mesh, has the ability to monitor the quality of a single wireless connection between two BreadCrumbs for the purpose of antenna tuning aka antenna peaking. The “Antenna Tune” option is available from the context menu in the Peer table.

Before attempting antenna tuning, verify that BC|Commander is viewing the Live Mesh. If BC|Commander is currently viewing the mesh through a *BC|Connector*, switch to a Live Mesh view with the menu selection *Mesh… Live Mesh*. For more information on *BC|Connectors*, see BC|Connectors.

Steps to bring up the Antenna Tuning window:

- Select a BreadCrumb in the BreadCrumb table.
- The Peers tab now displays the peers of this BreadCrumb and the network device of each peer connection.
- Right-click the row of a peer connection in the Peers tab and select “Antenna Tune” from the context menu. This context menu option will only be enabled for wireless connections.
- The Antenna Tune dialog will appear and begin to graph SNR, Signal and Cost as reported by the BreadCrumb and the selected peer, over the wlan link stated in the peer row.

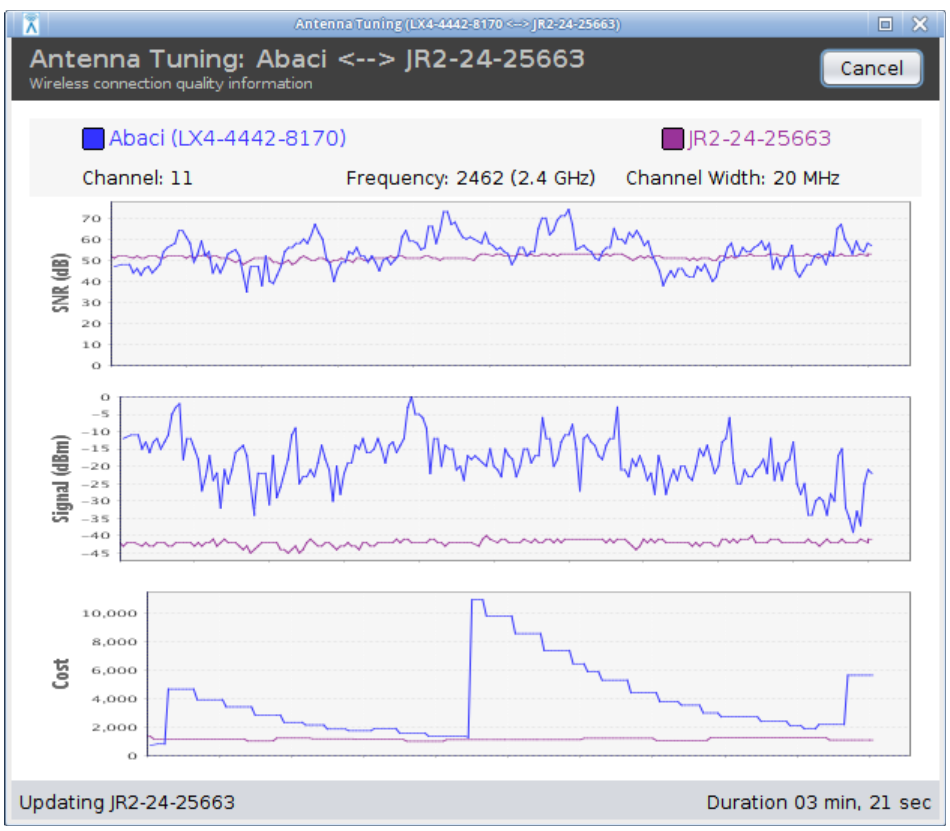

The BreadCrumbs being monitored will be instructed to send BC|Commander wireless connection information at 1 second intervals (regardless of the BreadCrumb configuration setting *BCAPI: General Update Interval*). These accelerated updates will continue until the Antenna Tuning dialog is closed. If either BreadCrumb were to lose the connection to its peer, graphing will flatline or pause until the connection is restored. If BC|Commander were to lose connection to one of the BreadCrumbs, graphing will pause until the connection is reestablished.

The graphs are a sliding window view of the collected information and will begin to discard/age-out older data after 4 minutes of usage. Historical data is not maintained.

> **Note**
> This feature is unlikely to work well with BreadCrumbs running firmware earlier than Version 11.8. Version 11.8 firmware added on-demand fast updates of cost, signal and SNR for the purpose of antenna tuning.

> **Caution:**
> While multiple Antenna Tuning dialogs may be open at any given time, each additional dialog will add additional traffic on the mesh and use additional resources in the computer running BC|Commander. Reconfiguring a BreadCrumb during Antenna Tuning may lead to unexpected anomalies in BC|Commander and is strongly discouraged.

To use the Antenna Tuning feature, the computer running BC|Commander must be on the same network/subnet as the BreadCrumbs being monitored and must be able to directly connect to them.

4.3.2 Distance

Many factors determine acceptable distances between BreadCrumb devices when deploying a mesh:

- If many devices are placed too closely together, it is possible that interference will degrade the performance of the system.
- Devices placed too far away or in RF “shadows” may experience total loss of connection.
- RF transmit power and receive sensitivity are important in determining the distances over which the device will be effective.
- When placing a BreadCrumb device, check the connection status to the nearest available device using either the BreadCrumb device’s status LED (described in section Status LED), or the BC|Commander management application. If the connection is poor or non-existent, attempt to relocate the BreadCrumb device closer to another device until an acceptable connection is obtained. If a poor connection or no connection is made at even relatively close distances, you should refer to the chapter Troubleshooting.
- When the connection quality is found to be acceptable from BC|Commander, the distance of the BreadCrumb device from the network can be increased until an optimal balance between distance, connectivity and tactical placement is achieved.

4.3.3 Weather

Precipitation and fog also act as obstructions blocking the propagation of the wireless network’s radio waves.

Light fog or precipitation may result in noticeable degradation of wireless network performance. Heavy precipitation or fog may result in severe performance degradation and possible loss of network connectivity.

If the performance of a well functioning network is degraded by worsening weather conditions, it may be advisable to add BreadCrumb devices into the network to act as short haul repeaters to counteract the effects of the weather. An alternative is to move the devices closer together.

4.3.4 Interference

RF interference can degrade network performance and can come from many different sources, including:

- Other BreadCrumb devices that are placed too closely together.
- Other RF devices such as microwave devices, cordless phone base stations, radio transmitters, other wireless networks, jamming devices, etc.
- Metal surfaces such as fences and building can cause radio waves to be reflected, causing multipath interference.

> **⚠ Caution**
> Plan the BreadCrumb Wireless Network to minimize the effects of RF interference.

4.3.5 Placement of Mesh Components

The placement of BreadCrumb devices has a major impact on maximum effective range, and therefore network performance. The components must be elevated above the surrounding terrain to allow for adequate wave propagation. A device placed directly on the ground has a significantly reduced effective range. Elevating a device above the ground dramatically increases the maximum effective range. Rajant recommends elevating the components a minimum of 6 ft. above the surrounding surface.

4.4 Deployment Guidelines and Methodology

This section addresses the actual on-site deployment of the mesh. While by no means an exhaustive treatise, it is intended as a good source of guidelines and methodology for the successful deployment of a mesh in the field.

4.4.1 Deployment Guidelines

Follow these guidelines when deploying the mesh:

1. Placement of BreadCrumbs
    a. Elevate the BreadCrumbs whenever possible.
        1. Directly on the ground, the maximum distance between any two BreadCrumbs is approximately 300 ft. Also, the maximum distance between a wireless client and the nearest BreadCrumb is approximately 300 ft.
        2. Rajant recommends elevating each BreadCrumb a minimum of 6 ft. above the surrounding terrain for maximum range. Elevating the BreadCrumbs, as little as 14 inches, has proven to increase the range out to approximately 600 ft.
2. Distance
    a. If you cannot elevate the BreadCrumbs, they can only be approximately 300 ft. apart. Also, any wireless clients can be no farther than approximately 300 ft. from a BreadCrumb.
3. Line of sight
    a. Obstructions to line-of-sight block/absorb/deflect the wireless network's radio waves, resulting in poor network performance or total loss of network connectivity.
    b. When placing the BreadCrumbs, scan the area for LOS obstructions. Envision the BreadCrumb's radio waves as a light beam. Look for obstructions that would result in shadows in the light beam, they will most likely weaken or block the BreadCrumb's radio waves.
4. Weather
    a. Light precipitation will reduce the range and performance of the BreadCrumb and wireless clients.
    b. Heavy precipitation or fog will most likely result in extremely reduced range and frequent or total loss of network connectivity.

4.4.2 Deployment Methodology

The steps detailed in this section should assist you in successfully deploying the mesh.

1. Scan the terrain on which the mesh will be deployed.
    a. Determine the initial distances between BreadCrumb devices. Refer to Rajant Troubleshooting Range User Guide for more information.

   b. Note any LOS obstructions, and plan BreadCrumb placement to work around them.
2. Identify the PC on which BC|Commander will be run.
   a. This PC should have a wireless NIC, as you will need to carry it with you as you deploy the mesh.
   b. Alternatively, the BC|Commander PC can be stationary with one person monitoring BC|Commander while another deploys the BreadCrumbs. This method requires some form of communication (radio, cell phone, etc.) between the two persons.
3. Determine the location for the first BreadCrumb.
4. Power ON the device.
5. Wait approximately 90 seconds for the device to boot.
6. Power ON the BC|Commander PC.
7. Start BC|Commander.
8. The BC|Commander console should display the first BreadCrumb.
9. Determine the approximate location for the next BreadCrumb.
10. Proceed to the location for this BreadCrumb, observing the network in BC|Commander as you progress.
    a. If the BreadCrumb loses network connectivity before you reach its destination, backtrack until network connectivity is restored. The point at which network connectivity for this BreadCrumb is restored is most likely the farthest point in this direction at which you will be able to place this BreadCrumb.
    b. If you reach the destination without losing connectivity you can place it there.
       1. At this point, you may choose to proceed farther in an attempt to make optimal use of the available BreadCrumbs.
       2. If so, proceed until network connectivity is lost and then backtrack until network connectivity is restored for this BreadCrumb. The point at which network connectivity is restored for this BreadCrumb is most likely the farthest point in this direction at which you will be able to place this BreadCrumb.
11. Repeat steps 9 and 10 for any remaining BreadCrumbs.

5. Firmware Upgrade and Zeroize

Each BreadCrumb relies on low-level software known as firmware for proper execution. For a BreadCrumb to communicate with other BreadCrumb devices or a BC|Commander client, the firmware version of the device must be compatible with the firmware versions of all other devices within the network, and with the version of BC|Commander running on the client computer.

> **Note**
> For procedures to install and upgrade the BC|Commander management application, refer to the latest BC|Commander Version 11 User Guide. Also note that any USB features described below only apply to BreadCrumb models that have a USB port.

The firmware is routinely updated by Rajant Corporation to add new product features, support new applications, and to fix reported problems. To upgrade the firmware on a BreadCrumb, you must obtain the appropriate firmware file for your BreadCrumb model from Rajant. Save the file on a computer on which the BC|Commander management application has been installed.

5.1 Firmware Upgrade

> **CAUTION**
> Do NOT turn off or reboot a BreadCrumb while it is installing new firmware. An interruption to power during the firmware installation process can result in the BreadCrumb being unable to boot properly.

5.1.1 Over The Air Firmware Upgrade

One method of upgrading the firmware is a process called “Over-the-Air (OTA) firmware upgrade” which is an over-the-mesh-network upgrade, whether wired or wireless. This is a remote process, controlled and initiated by a system administrator using BC|Commander. Follow the instructions in the BC|Commander Version 11 User Guide (Administrative Tasks – Over-the-Air (OTA) firmware upgrade) to perform the firmware upgrade process.

5.1.2 USB Firmware Upgrade

Version 11 firmware supports USB firmware upgrade. This process takes place at the BreadCrumb’s location and requires a properly prepared USB storage device. To perform the firmware upgrade process, follow these procedures:

1. Prepare a USB storage device with the appropriate firmware file using BC|Commander. Follow the instructions in the *BC|Commander Version 11 User Guide* (Administrative Tasks – USB Firmware Upgrade).
2. Connect the USB storage device to the BreadCrumb’s USB port (and if the BreadCrumb is powered off, turn on the BreadCrumb at this time).

   > **Note**
   > With version 11, the USB drive can be connected to a live BreadCrumb and the upgrade process will begin automatically.

3. The firmware upgrade process will take several minutes. Observe the BreadCrumb’s Status LED to monitor progress.
   a. When the USB firmware upgrade begins, the Status LED will start blinking yellow, which indicates progress. When the process nears completion, the blink rate will increase from once per second to several times per second.
   b. If the firmware upgrade completes successfully, the Status LED will rapidly rotate between red, green, blue, cyan, magenta, yellow and white colors.
   c. If an error condition is encountered, the Status LED will start repeating a particular sequence of long and short blinks in red, indicating the error code. Take note of the error code (see Appendix Error and Warning Codes) for an explanation of error codes). Leaving the USB storage device

connected, turn power to the BreadCrumb OFF and then ON again. Observe the Status LED to monitor progress. If, during this second firmware upgrade attempt, another error occurs, take note of the new error code and then apply for technical support.

4. When complete, turn power to the BreadCrumb OFF, disconnect the USB storage device, then turn power to the BreadCrumb back ON.

5.2 Zeroize

⚠ CAUTION
Do NOT turn off or reboot a BreadCrumb while it is being zeroized. An interruption to power during the zeroization process can result in the BreadCrumb being unable to boot properly.

5.2.1 Over the Air Zeroize

If it is necessary to erase all settings of a BreadCrumb, the BC|Commander Zeroize feature can be used. This feature is found in the BreadCrumb menu and in the right mouse contextual menu of a selected BreadCrumb. This is an over-the-mesh-network operation, whether wired or wireless. Note that a Zeroize (or Config Reset) will likely make that BreadCrumb unable to connect to your mesh due to incompatible settings so it is best to use this feature only on BreadCrumbs that can be physically accessed.

With firmware version 11.17.7 and higher, the BC|Commander Zeroize dialog will offer a choice or a full Zeroize or a Config Reset that retains logs.

An Over the Air Zeroize (or Config Reset) will automatically reboot the BreadCrumb when it completes.

⚠ Important: Regarding Physical Access
Physical access to the device will likely be required for re-configuration.

5.2.2 USB-Based Zeroize

Version 11 firmware includes a USB-based zeroize feature. This feature does not upgrade or in any other way affect the firmware version running on the BreadCrumb. This process takes place at the BreadCrumb's location and requires a properly prepared USB storage device. To perform the zeroize process, follow these procedures:

1. Prepare a USB storage device using BC|Commander by selecting the "Zeroize (Do Not Upgrade)" option in the USB Flash Manager. Please see the BC|Commander Version 11 User Guide (Administrative Tasks – USB-Based Zeroize) for more detailed instructions on how to properly prepare the USB storage device.
2. Connect the USB storage device to the BreadCrumb's USB port (and if the BreadCrumb is powered off, turn on the BreadCrumb at this time).

   Note
   With version 11, the USB drive can be connected to a live BreadCrumb and the zeroize process will begin automatically.

3. The USB-based zeroize process will take less than a minute. Observe the BreadCrumb's Status LED to monitor progress. Wait for the LED to flash error code 32 "BreadCrumb has been zeroized."
4. Turn power to the BreadCrumb OFF, disconnect the USB storage device, then turn power to the BreadCrumb back ON.

6. Troubleshooting

> **Note**
> Battery tips apply to any BreadCrumb that is powered by batteries, solar power or any power source that may become irregular or weak.

> **DFS and Troubleshooting**
> When troubleshooting problems with a BreadCrumb radio on a 5 GHz DFS channel, remember that radio must listen for radar and not transmit (or mesh) for typically 1 minute after is it fully booted. Channels in the frequencies 5600-5650 MHz, if available, may have a 10 minute wait. In addition, if a radar-like noise pattern is detected on the channel, the radio will shut down for 30 minutes. For more information including some potential causes of false radar detections, see this section: DFS and TPC.

6.1 Sporadic Network Connectivity

a. If a BreadCrumb is powered by a battery, as the battery approaches exhaustion, network connectivity will become sporadic for the BreadCrumb device and its associated wireless clients.
   - Monitor battery usage and charge or replace batteries as necessary.
b. Light precipitation or fog beginning after initial deployment of the mesh can result in sudden sporadic network connectivity for BreadCrumb devices and their associated wireless clients.
   - Increase the density of the network by adding more BreadCrumb devices or by moving existing BreadCrumbs closer together.
c. As a mobile wireless client moves around through the coverage area, LOS (line of sight) to the BreadCrumb device can become obstructed resulting in sporadic network connectivity for this wireless client.
   - Train mobile wireless client users to maintain LOS to known BreadCrumb device locations. Place BreadCrumb devices strategically to ensure coverage of areas through which users are expected to move.
d. A mobile wireless client that moves beyond the range of the mesh will experience sporadic, and eventually complete, loss of network connectivity.
   - Drop more BreadCrumb devices as necessary to increase range.
e. A wireless client cannot join the network.
   - Ensure that BreadCrumb devices are powered on.
   - Ensure that the BreadCrumb configuration has Enable Access Point checked. This is off by default.
   - Ensure that the wireless card in the client device (laptop) is enabled. This is usually indicated with a blinking light on the card.
   - Ensure that the client's wireless card is in "Infrastructure" or "Access Point" mode, and not in "Ad Hoc" mode. Scan for the default ESSID "rajant" (or the ESSID that you set for the network) using the software accompanying your wireless card.
   - Ensure that the wireless client's IP address settings are configured properly.
   - Ensure that the security settings on the client device and BreadCrumb devices match.
   - Ensure that the client device is not prevented from connecting by an ACL (Access Control List).
   - Ensure that the VLAN settings for the BreadCrumb allow clients of the ESSID being used to communicate to the Local Port of the BreadCrumb. See the VLAN section of the BC|Commander Version 11 User Guide for more information.

6.2 BreadCrumb Device Cannot Connect to Mesh

a. A new BreadCrumb or a BreadCrumb reset to factory defaults is running with settings which do not match those of the network to be joined.
   - Configure the BreadCrumb settings to match those of the network to be joined.
b. Discharged batteries can cause the BreadCrumb device to appear to power up, but not be able to establish connectivity to the mesh.
   - When deploying any battery-powered BreadCrumbs to the mesh, ensure that the batteries are fully charged.

c. When using external antennas, faulty cable connections or crimped cables can result in difficulty establishing and maintaining network connectivity.
    - Check antenna cables and their connections to the BreadCrumb device.

6.3 BreadCrumb Power and Start-Up Issues

a. Discharged external batteries can cause a BreadCrumb to appear to power up("PWR" LED is lit), but fail to start-up.
    - Monitor battery usage and charge/replace batteries as necessary.
b. Electrostatic Discharge can cause a BreadCrumb to appear to power up (Status LED indicates power is on with a white light, which can sometimes appear pale blue or pale green), but fail to start-up.
    - Manually reboot the device by turning off or disconnecting power to the device and turning power back on.

> **⚠ Caution**
> In order to avoid sparking and possible damage to the device, be sure to connect the power cable to the BreadCrumb before applying power to the power supply.

7. Appendices

Appendix A: Radio Channels and Frequencies

Rajant BreadCrumbs contain from one to four radios, depending on the model. 802.11g radios are used in the 900 MHz and 2.4 GHz bands. 802.11a radios are used in the 4.8 GHz, 4.9 GHz and 5 GHz bands. 802.11n radios are used in the 2.4 GHz and 5 GHz bands. Each BreadCrumb model supports its own specified radio or combinations of radios.

The radios support the channels and frequencies listed in the following tables. Which channels are available for use depends on country and regulatory agency.

Note
Not all channels are allowed for use everywhere around the world. Check with the corresponding wireless spectrum regulatory body to determine the subset of channels authorized for use in your country.

Caution
Since the radios operate at different frequencies, you must be careful to use the correct type of antenna with each radio. As an example, a 2.4 GHz antenna will not work with a 5 GHz radio and vice versa.

A.1 Radio: 2.4 GHz 802.11n

Table: 2.4 GHz 802.11n Radio Channels and Frequencies

Channel Number	Center Frequency (MHz)	HT40 Capability
1	**2412**	HT40 +
2	2417	HT40 +
3	2422	HT40 +
4	2427	HT40 +
5	2432	HT40 +, HT40 -
6	2437	HT40 +, HT40 -
7	2442	HT40 +, HT40 -
8	2447	HT40 +, HT40 -
9	2452	HT40 +, HT40 -
10	2457	HT40 -
11	**2462**	HT40 -
12	2467	HT40 -
13	2472	HT40 -
14	2484	HT20 only

The default channel and channel mode for a BreadCrumb 2.4 GHz 802.11n radio is 11 (2462 MHz) and HT20. If a second 2.4 GHz 802.11n radio is present, its default channel and channel mode is 1 (2412 MHz) and HT20.

2.4 GHz channels support HT40 mode. In this mode, the radio binds two standard 20 MHz channels to obtain a wider bandwidth 40 MHz channel. The + or - designation describes if the second channel is above or below the base channel. Plus (+) indicates that the additional 20 MHz occurs above (at a higher fre-

quency than) the first 20 MHz while minus (-) indicates that the additional 20 MHz occurs below (at a lower frequency than) the first 20 MHz.

> **Note**
> Note, the frequency noted is the center frequency of the base 20 MHz channel. HT40 operation (+ or -) is compatible with 802.11b and 802.11g 20 MHz, and 802.11n HT20 modes.

A.2 Radio: 5 GHz 802.11n

Table: 5 GHz 802.11n Radio Channels and Frequencies

Channel Number	Center Frequency (MHz)	HT40 Capability
36	5180	HT40 +
40	5200	HT40 -
44	5220	HT40 +
48	5240	HT40 -
52	5260	HT40 +
56	5280	HT40 -
60	5300	HT40 +
64	5320	HT40 -
100	5500	HT40 +
104	5520	HT40 -
108	5540	HT40 +
112	5560	HT40 -
116	5580	HT40 +
120	5600	HT40 -
124	5620	HT40 +
128	5640	HT40 -
132	5660	HT40 +
136	5680	HT40 -
140	5700	HT20 only
149	**5745**	**HT40 +**
153	5765	HT40 -
157	**5785**	**HT40 +**
161	5805	HT40 -
165	5825	HT20 only

The default channel and channel mode for a BreadCrumb 5 GHz 802.11n radio in the US and Canada is 157 (5785 MHz) and HT40+. If a second 5 GHz 802.11n radio is present, its default channel and channel mode is 149 (5745 MHz) and HT40+. In most European countries, the default channel and mode is 136

(5680 MHz) and HT40-, and if a second radio is present, its default channel and mode is 100 (5500 MHz) and HT40+. In other countries the default channels may differ based on local regulations.

> **Note**
> If the default channels aren't available, the default will instead be the first valid channel (in order of channel number) with the largest bandwidth (up to 20 MHz) that doesn't conflict with other radios. If that fails, meshing will be disabled on that radio.

Some 5 GHz channels support HT40 mode. In this mode, the radio binds two standard 20 MHz channels to obtain a wider bandwidth 40 MHz channel. The + or - designation describes if the second channel is above or below the base channel. Plus (+) indicates that the additional 20 MHz occurs above (at a higher frequency than) the first 20 MHz while minus (-) indicates that the additional 20 MHz occurs below (at a lower frequency than) the first 20 MHz.

> **Note**
> The 802.11n frequency noted is the center frequency of the base 20 MHz channel. This is different from 802.11a turbo mode where the frequency was the center of a single 40 MHz wide channel. HT40 operation (+ or -) is compatible with 802.11a 20 MHz and 802.11n HT20 modes. HT40 operation is NOT compatible with 802.11a turbo mode.

> **Caution**
> Most 5 GHz antennas only support a subset of the 802.11n 5 GHz frequency channels the Rajant radio is capable of operating at. Before changing the channel of a 5 GHz radio, verify that the channel is supported by the connected antenna.

> **IMPORTANT: Regarding indoor-only frequencies**
> In regions where radio frequencies are regulated by ETSI (CE), the frequency range 5170-5350 MHz is restricted to indoor use only. Check local regulations before using these channels.

> **IMPORTANT**
> In many regions where radio frequencies are regulated by ETSI (CE), a license is required to use channels in the frequency range 5735-5835 MHz (on models that offer these channels). Check local regulations before using these channels.

> **IMPORTANT**
> In Canada, a license is required to use channels in the frequency range 5150-5250 MHz (on models that offer these channels). The license may restrict transmit power. Licensing information may be found at http://www.ic.gc.ca/eic/site/smt-gst.nsf/eng/sf11294.html

A.3 DFS and TPC

DFS and TPC for 5 GHz Channels

Many channels in the 5 GHz band are subject to regulations that require active avoidance of interference with weather radar and other radars (Dynamic Frequency Selection aka DFS). In many countries, regulations also require lower transmit power for nearby wireless connections (Transmit Power Control aka TPC) on the same channels. These DFS channels may be available for use in some countries on BreadCrumbs with 5 GHz radios that provide hardware support for radar detection.

The list of 5 GHz channels that are subject to DFS and TPC depends on the regulatory domain of the region of operation. In many regions any available channels from 5260-5700 MHz require DFS, or DFS and TPC. In some regions, additional channels require DFS and TPC.

DFS channels will not be available immediately upon startup and will become non-operational for a fixed period of time after radar or any radar-like pulse of noise is detected.

BreadCrumb DFS Behavior

- **After power-on or restart, all transmits on a DFS channel will be disabled for 1 minute** (typical) while the radio pre-checks for radar on that channel (the Channel Availability Check aka CAC). If the

1 minute completes without detecting radar, the radio can then start normal operation on the channel while still continuously checking for radar. Note: Channels from 5600 MHz to 5650 MHz, if available, may have a 10 minute CAC period.

- **If radar detection is triggered on a DFS channel, that radio will stop transmitting for 30 minutes** (the Non-Occupancy period aka NOP). Warning code 382 “Radar detection paused radio: wlanN (wlanN …)” will be displayed in BC|Commander if the affected unit was able to report its warning status over another radio or over ethernet.
- **When the 30 minute NOP period of not transmitting completes, before reusing the DFS channel, the radio must not transmit for 1 additional minute** (may be 10 minutes for 5600-5650 MHz) while pre-checking for radar (a CAC period). If no radar is detected during the CAC period, normal radio operation is resumed with continuous checking for radar.
- **When resuming normal operation after a radar detection,** the radar detection warning 382 will be removed from the radio and a warning 383 “Radio resumed from radar pause: wlanN (wlanN, …)” will be added. This 383 “unpaused” warning will remain up for 12 hours so that personnel will know what radios were affected by DFS stoppages. Warning 383 will be removed when all listed radios have been aged out.

About Radar Detection

Radar is detected as pulses (spikes) of radio frequency (RF) noise. If pulses of noise make it past several range checks, and the pattern of pulses is sufficiently similar to a radar pattern, a radar detection event will occur. False detections may be caused by anything that creates RF interference including electrical equipment, improperly positioned antennas, nearby wireless radio devices and RF reflections caused by antennas too close to the ground, walls or other RF-reflecting surfaces.

If possible, use of DFS channels should be avoided for critical network paths, especially if the BreadCrumb has no other wired or wireless network connections to the mesh.

DFS Additional Antenna Separation
For 5 GHz transceivers using channels that require DFS radar detection, it is recommended to mount each antenna for a DFS channel at least 2 feet from any other 5 GHz transceiver’s antenna.

Note: Two new DFS-related fields can be examined in BCAPI Explorer. For wireless DFS channels, these fields will indicate the count of RF interference pulses encountered as well as a count of how many were deemed sufficiently similar to radar by the radar pattern detector.

- state.wireless[n].stats.pulseEvents – Raw count of interference pulses detected by the radio
- state.wireless[n].stats.radarDetections – Count of pulses that triggered radar detector

TDWR

Terminal Doppler Weather Radar (TDWR) operates in the frequencies 5600-5650 MHz. TDWR helps protect airplanes from hazardous weather such as wind shear and gusts. Wireless network installations within 35 km of or in line-of-sight of a TDWR must not use TDWR frequencies and should avoid using channels within 30 MHz of the TDWR frequencies. A list of U.S. TFDR radar coordinates may be found at WISPA.org:
WISPA.org - see TDWR Resources

Warning
Operating this equipment in violation of Local, Regional or National Standards, including interfering with radar, is likely to result in substantial sanctions to the User, including fines, imprisonment, confiscation of equipment, and other penalties as determined by your local regulatory authorities.

Appendix B: Error and Warning Codes

Possible BreadCrumb error and warning codes are listed below.

A BreadCrumb can have multiple errors or warnings listed in the Alerts tab of BC|Commander but only one code will be flashed on the BreadCrumb's status LED. A few codes such as 811 and 335 are non-flashing alerts. For a BreadCrumb with other active alerts, the lowest number error code will flash on the BreadCrumb's status LED, and if there are no errors then the lowest number warning will flash.

Numeric error codes are flashed as groups of red (error) or yellow (warning) LED blinks. For example, a meshed BreadCrumb displays a green LED. If the BreadCrumb starts to display warning 37, the following would be seen: green (link state), yellow blinks 3 times, short pause, yellow blinks 7 times, long pause of green (link state), yellow blinks 3 times, short pause, yellow blinks 7 times, etc.

Code	Firmware Upgrade Codes (1*)
11	Flash image file does not exist.
12	Current flash image version is greater than versions of files found on USB drive.
13	No flash image files found.
14	Unable to mount USB drive.
15	Unable to retrieve next boot image number.
16	Continuous Transmit Mode
17	Unlocking of /dev/mtd0 failed.
18	fconfig for SetMainBoot failed.
19	Copying of zImage failed.
111	Copying of ramdisk failed.
112	FIS directory update of ramdisk failed.
113	Copying of etc failed.
114	FIS directory update of /etc failed.
115	Copying failed.
116	Flash unbundle failed.
117	Version information in flash file name and breadcrumb-buildinfo.conf do not match.
1171	Platform information in flash file name and breadcrumb-buildinfo.conf do not match.
118	Untar failed.
119	FIS directory update of kernel failed.
121	Failed to unmount /etc.
122	In Failsafe mode, but no USB drive detected.
123	BreadCrumb will be in failsafe mode and unable to communicate with other BreadCrumbs after next reboot.
124	Failed to suspend bcconfigd.
125	Failed to set boot path to next image.
126	Failed to erase end of next file system image.

Code	Firmware Upgrade Codes (1*)
127	Failed to copy file system image.
128	Failed to checksum file system image.
129	Failed to create directory for next file system image.
131	Failed to mount next file system image.
132	Failed to create directory for settings.
133	Failed to copy current settings to next file system image.
134	Failed to unmount next file system image.
135	Failed to copy init image.
136	Failed to copy bootloader image.
137	This flash image may not be installed onto this BreadCrumb.
138	Failed to copy failsafe file system.
141	Error retrieving flash file.
142	The version you are installing does not support the configured Packet Cipher
143	The version you are installing does not support the configured MAC Address Cipher
144	The version you are installing does not support the configured Per-hop Authentication algorithm
145	The version you are installing does not support the configured security policy
146	Failed to verify consistent country settings
147	The configured countries are not consistent
151	Pre-manufacturing install process failed
152	Firmware install failed
153	Post-manufacturing install process failed
154	The autorun is missing required symbols
155	GSC firmware update failed
161	Failed to restore configuration from last Restore Point
Code	**Diagnostic Codes (2*)**
21	Recovery log detected. To clear this message, please take a diagnostic snapshot and upload to https://secure.rajant.com.
22	Internal error detected. Please take a diagnostic snapshot and upload to https//secure.rajant.com. This message will be cleared on the next reboot.
23	Internal developer settings detected - may cause undefined behavior. Use zeroize to clear.
233	This device is not configured for commercial use and will cause undefined behavior. Contact support to rectify.
234	This device is running BETA software. Contact support for the latest supported version.
24	Stress mode is running - may cause undefined behavior. Reboot to clear.
242	Internal hardware error detected via stress testing. Take a diagnostic snapshot and upload to https//secure.rajant.com for analysis.

Code	Firmware Upgrade Codes (1*)
25	Internal developer overrides detected.
Code	**Self-Test Codes (3*)**
31	Hardware configuration not set. Factory initialization required.
311	Hardware error detected.
32	BreadCrumb has been zeroized.
321	BreadCrumb is being zeroized.
322	Breadcrumb is in Deployment Mode.
33	Radio(s) not detected.
331	Radio in MANUAL compliance mode is violating country regulation.
332	Spectrum Access not granted
333	Low Battery
334	Gas gauge not initialized. To initialize, please power off unit and fully charge.
335	Non-compliant radio configuration in use
34	Cannot read /dev/nand6 information, or cannot resize or format /dev/nand6.
36	Hardware monitor missing.
37	Failed to configure ethernet port
38	Resetting radio due to error.
381	Noise floor threshold exceeded
382	Radar detection paused radio
383	Radio resumed from radar pause
385	Radio(s) failed to initialize
386	Radio(s) warming up.
387	High internal temperature detected.
388	Low input voltage detected.
389	High input voltage detected.
Code	**FIPS Codes (4*)**
41	FIPS Power-on self-tests failed.
411	FIPS DRBG power-on self test failed.
412	FIPS DRBG continuous test failed.
413	FIPS DRBG health check failed.
414	Kernel integrity check failed.
415	Filesystem integrity check failed.
416	FIPS USB test vector data missing.
417	FIPS Invalid configuration.

Code	Firmware Upgrade Codes (1*)
418	Flash image may not be installed while in FIPS mode.
42	Mixed SecNet/Non-SecNet configuration.
421	Default password in use
43	Rekeying error.
44	Rekeying error.
45	Rekeying error.
46	Rekeying error.
47	Rekeying error.
48	Rekeying error.
49	Rekeying error.
431	Rekeying error.
432	Rekeying error.
433	Rekeying error.
434	Rekeying error.
435	Rekeying error.
436	Rekeying error.
441	Status override CPLD feature not available (wrong CPLD version).
Code	**Fatal and Serious Codes (5*)**
51	Internal error, system will restart.
52	hostapd fatal error.
521	HT40 bandwidth reduced to HT20 due to nearby access point on HT40 secondary channel
522	IEEE 802.11 TKIP countermeasures initiated
53	Taking over as APT master
531	High cost APT link
54	fatal error.
541	Software error
55	Low memory - automatic reboot scheduled.
56	APT peer bridge settings do not match
57	logwatcher start timeout
Code	**Battery Gas Gauge Codes (6*)**
61	Battery gas gauge i2c device could not be found.
62	Incorrect gas gauge revision 1 EEPROM settings.
63	Incorrect gas gauge revision 2 EEPROM settings.
64	Incorrect gas gauge revision 3 EEPROM settings.
65	Unknown gas gauge revision.

Code	Firmware Upgrade Codes (1*)
66	Incorrect ME3 gas gauge revision 0 EEPROM settings.
67	Internal battery charger disabled.
Code	**Other Codes (7, *8*, 9*)**
71	Host flapping detected.
72	Critical I2C failure.
73	Invalid channel configured.
74	Bad v10 factory configuration.
741	Signing key installation failure.
75	Unsupported hardware component.
76	Potential loop detected, turned off port
77	Model is not supported in this version of firmware. Contact support.
81	reserved
811	Default Network Key is in use.
82	reserved
83	reserved
84	reserved
85	reserved
86	reserved
87	reserved
88	reserved
89	reserved
91	Invalid SSL Handshake Priority String:

Appendix C: Ports and Protocols

Table: Ports and Protocols

Service	From	To	Protocol
BreadCrumb Discovery	Ephemeral port on BC|Commander workstation	224.0.0.224, port 35057 (UDP IPv4 multicast); FF02::1, port 35057 (UDP IPv6 multicast); BreadCrumb IPv4 or IPv6 addresses, port 35057 (UDP IPv4 or IPv6 unicast)	IPv4 UDP, IPV6 UDP
BreadCrumb Discovery	BreadCrumb IPv4 or IPv6 address, port 35057	Ephemeral port on BC|Commander workstation (UDP IPv4 or IPv6 unicast);FF02::1, port 35057 (UDP IPv6 multicast) at BreadCrumb startup	IPv4 UDP, IPv6 UDP
BCAPI (BC|Commander)	Ephemeral port on BC|Commander workstation	BreadCrumb IPv4 or IPv6 addresses, port 2300 (default)	IPv4 TCP, IPv6 TCP
BC|Enterprise	Ephemeral port on BC|Enterprise server	BC|Connector TCP port 23000	IPv4 TCP, IPv6 TCP
BC|Enterprise (database and graphing services)	Ephemeral port on BC|Enterprise server	BC|Enterprise server ports 3000, 8889 and 9090 (internal use only)	IPv4 TCP, IPv6 TCP
BC|Enterprise Client	Browser on client workstation	BC|Enterprise workstation port 8888	IPv4 HTTP, IPv6 HTTP
BC|Connector	Ephemeral port on BC|Connector workstation	BreadCrumb IPv4 or IPv6 addresses, port 23000	IPv4 UDP, IPV6 UDP
BC|Connector	Ephemeral port on BC|Connector workstation	If LDAP is enabled, LDAP Server, port 3268 or 389 (whichever is used)	IPv4 UDP, TCP; IPv6 UDP, TCP
APT Discovery - v10 Compatibility Mode	BreadCrumb ethernet interface, raw ethernet	FF:FF:FF:FF:FF:FF (raw Ethernet broadcast)	ARP (see note below)
APT - v10 Compatibility Mode	BreadCrumb ethernet interface IPv6 link-local address, ephemeral port	BreadCrumb ethernet interface IPv6 link-local address port 2210 for the service listener, ephemeral port for data flow	IPv6 UDP
APT - v11	BreadCrumb ethernet interface IPv6 link-local address, ephemeral port	BreadCrumb ethernet interface IPv6 link-local address port 2210 for the service listener, ephemeral port for data flow	IPv6 UDP
RPT (SCTP default)	BreadCrumb IPv4 or IPv6 address, ephemeral port	BreadCrumb IPv4 or IPv6 address, SCTP port 2210 for the service listener, ephemeral port for data flow	IPv4 or IPv6 SCTP
RPT (UDP option)		BreadCrumb IPv4 or IPv6 address, UDP port 2211 for the service lis-	IPv4 or IPv6 UDP

Service	From	To	Protocol
	BreadCrumb IPv4 or IPv6 address, ephemeral port	tener, ephemeral port for data flow	
TRoIP Audio RTP Traffic	BreadCrumb IPv4 address, ephemeral port	IPv4 multicast address 225.0.0.1-225.0.2.255 port 24680	IPv4 UDP
Remote Packet Capture	Remote Packet Capture Client (BC|Commander)	BreadCrumb configured TCP port (default:5825)	IPv4 TCP
Performance Test (iperf3)	BreadCrumb IPv4 or IPv6 address, ephemeral port	BreadCrumb IPv4 or IPv6 address, port 5201	IPv4 UDP, TCP; IPv6 UDP, TCP
AeroScout ®	BreadCrumb ephemeral port	AeroScout server UDP port 12092	IPv4 UDP
AeroScout ®	AeroScout server ephemeral port	BreadCrumb UDP port (default:1511)	IPv4 UDP

AeroScout is a registered trademark of AeroScout Inc.

Note
APT Discovery in v10 Compatibility Mode may be truncated by some third-party equipment.

Appendix D: Installation Guidelines

Guidelines follow for installing a typical Rajant BreadCrumb. The order of installation may differ depending on where the BreadCrumb will be installed and configured.

Also read all warnings and guidance in the rest of this guide.

D.1 Professional Installation Is Required

Model: BreadCrumb ES1

Professional installation is required for this device and will be performed only by someone knowledgeable of its use. Rajant Corporation will ensure that the device is only marketed and sold to professionals.

The device is not sold to the general public and is sold only for industrial or commercial use by professional installers.

> ⚠ **Antenna Installation WARNING**
> The installer should configure the conducted output power level according to country regulations and the applicable EIRP limit. Professional installation of equipment is required to ensure compliance with health and safety issues.

> ⚠ **IMPORTANT: Exposure to Radio Frequency Radiation**
> To satisfy RF exposure requirements a minimum safe distance must be maintained between this device including antennas and all persons while the device is operating. The minimum distance for this model is stated in the the FCC chapter of this guide.

D.2 Safety

> ⚠ **Warning**
> The BreadCrumb ES1 is not user serviceable. Repairs must be performed at a Rajant designated service center by trained personnel.

Also see the warnings in the Connecting Power section below.

D.3 Modifications

> ⚠ **CAUTION**
> Changes or modifications not expressly approved by Rajant Corp. could void the user's authority to operate the equipment.

Rajant Products are compliant and warranted against manufacturing defects only so long as Rajant-authorized accessories are used in deployment of Rajant Breadcrumbs. It is the responsibility of the operator and the installer to ensure the system as installed operates within regional requirements.

D.4 Attaching Antenna Cables and Antennas

Most of Rajant's standard antennas are characterized by high-gain and therefore small vertical beamwidth. Antennas in fixed locations should be installed plumb and at the same elevation so that BreadCrumbs using these antennas will see each other without a significant loss of signal strength.

> ⚠ **Warning**
> To avoid possible damage to the BreadCrumb radio(s), always turn off power to the BreadCrumb before connecting or disconnecting external antennas.

Required Antenna Separation

The antennas from any transceiver of the BreadCrumb ES1 may not be co-located with the antennas any other transceiver. The co-location restriction is satisfied by maintaining 20 cm separation between the

antennas. There is no restriction for the separation between the antennas from the same transceiver, but testing at installation is recommended to verify the system performance that is achieved with a specific antenna deployment configuration.

> **⚠ Warning**
> For installations that will experience vibration or shock, all antennas should be externally mounted and attached to the ES1 using cables. Low loss RF cable such as LMR-400 is recommended for cable attached antennas. If a radio port is not required for a given application, the port should be disabled in software using BC|Commander, and a 50 Ohm terminator should be installed.

> **DFS Additional Antenna Separation**
> For 5 GHz transceivers using channels that require DFS radar detection, it is recommended to mount each antenna for a DFS channel at least 2 feet from any other 5 GHz transceiver's antenna.

Figure: Incorrect Antenna Placement (ME4 shown)

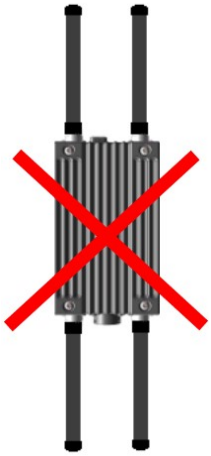

Summary

- Each antenna must be installed at least 20 cm from the antennas of any other transceivers.
- For locations with vibration or shock, no antennas should be directly attached to the BreadCrumb.
- For antennas connected to the BreadCrumb via cables, low loss cabling such as LMR-400 is recommended.
- Any unused antenna ports should be disabled in BC|Commander and have a 50 Ohm terminator installed.
- Antennas in fixed locations should be installed plumb and at the same elevation.
- The BreadCrumb and its antennas must be located a distance from any persons when operating. The minimum distance for this model is stated in the the FCC chapter of this guide.

Also Note:

- Power to the BreadCrumb should be OFF when attaching or removing antennas or terminators.
- To reduce shock and vibration, BreadCrumbs on mobile equipment should be mounted in or on the cab.
- See Physical Placement and other Considerations regarding Line of Sight and Fresnel Radius.
- Mounting hardware for cabled antennas may be purchased from Rajant.
- 5 GHz channels requiring DFS radar detection may get false triggers if antennas are placed near reflecting surfaces/objects or other electrical or radio equipment.

D.5 Grounding and Surge Protection

> **⚠ Warning**

To protect the user against the risk of electric shock during high voltage transient events which may occur when this equipment is installed outdoors, protective earth grounding of the POE power supply is required. Case ground connections are provided on all Rajant supplied POE power supplies. The case ground connections must be used and must be connected to a protective earth ground. Protective earth grounding operations must be performed by trained personnel, and according to local electrical codes and industry best practices, as well as Rajant's own recommendations.

To assure continuity of ground from the BreadCrumb to the PoE to the ground, and to help protect the BreadCrumb and any attached equipemt from electrical damage, please see:

- Rajant Best Practices: Grounding and Surge Protection

D.6 Waterproofing

For outdoor installations, Rajant recommends waterproofing all connections as follows:

- See Waterproofing Rajant BreadCrumb RF Connections

D.7 Connecting Power

- For power requirements and PoE usage diagrams, see the Power and Ethernet section.
- The BreadCrumb's on/off switch (if any) should be off when connecting or disconnecting power.
- BreadCrumbs only support Passive PoE. Do not use a Cisco switch PoE to power a BreadCrumb (set switch port's power to "never").

D.8 Configuration

Configure the BreadCrumb to be compatible with any existing or planned BreadCrumb mesh network. This will include configuring the desired channel and bandwidth and configuring security settings. Complete and test the configuration before mounting the BreadCrumb anywhere unreachable.

- See the BreadCrumb model guide's chapter Deploying a BreadCrumb Mesh Network.
- See the *BC|Commander User Guide* chapters "Administrative Tasks" and "BreadCrumb Configuration".

D.9 Placement

See the BreadCrumb model guide's chapter "Deploying a BreadCrumb Mesh Network" starting at the section Physical Placement and other Considerations.

Appendix E: Sealed RJ45 Assembly

Important
Installing the WAPV male sealed RJ45 connector requires proper tools and expertise in building shielded CAT5e / CAT6 network cables.

Warning
While the sealed RJ45 is being built there should be NO POWER attached to the cable.

The male sealed RJ45 connector is a Genesis Technology WAPV-100-AKY0T which includes soft plugs to fit two different ranges of cable diameter. This section will refer to the connector as just “WAPV”.

E.1 Parts of the Male Sealed RJ45 Ethernet Connector

The following image shows the parts of the WAPV male connector in the same order they are assembled on an unterminated Ethernet cable. Rajant recommends using shielded CAT5e or CAT6 cable. Any lower quality of cable may not support full Ethernet speed.

Note on CAT Cable Sizes
Note that the overall cable diameter and the individual wire diameters of CAT6A cables and some CAT6 and CAT5e cables may be too thick to be used with the shielded RJ45 connector that comes with the WAPV sealed connector.

Figure: WAPV Male Sealed Ethernet Connector Parts

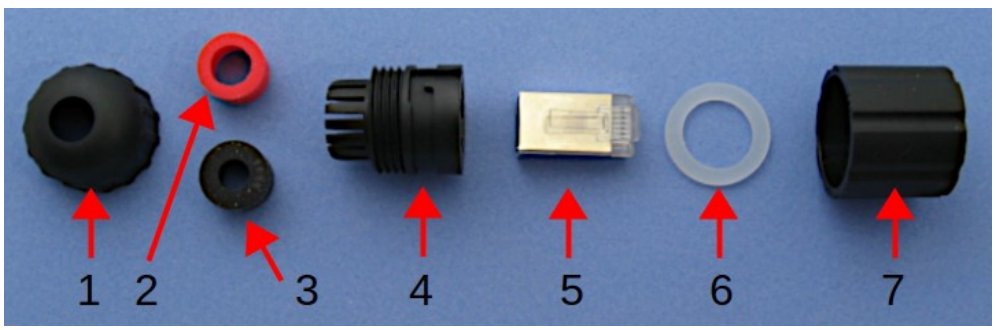

(1) Cap

(2) Red soft plug for cable 7.0 - 8.1 mm diameter cable

(3) Black soft plug for cable 5.0 - 6.0 mm diameter cable

(4) Inner shell

(5) Metal-shielded male RJ45 plug (plastic latching tab visible on top)

(6) Soft circular washer

(7) Outer shell

Important
Keep track of the small parts when assembling the connector. It is easy to lose a small soft plug or the soft circular washer. The soft circular washer can even slip out of the fully assembled connector. If cables are being pre-assembled, it might be a good idea to tape a plastic bag around the finished connector until it is time to mate it to the female WAPV part on the ES1 enclosure.

E.2 Choose the Correct Soft Plug

Only one soft plug is used when building the connector. Measure the diameter of your Ethernet cable and choose the one that is correct for that diameter. This is important for getting a sealed connection.

- Red plug is for cable 7.0 - 8.1 mm diameter.
- Black plug is for cable 5.0 - 6.0 mm diameter

Figure: Red or Black WAPV Soft Plug Choice

E.3 Pre-thread Before Termination

Three WAPV parts (cap, soft plug, inner shell) must be pre-threaded onto the not-yet-terminated end of the Ethernet cable. In this example, the red soft plug is used because this Ethernet cable's diameter is 7 mm. Note that one end of the soft plug is wider. The wider end of the soft plug faces the cap. The narrower end faces the inner shell.

Figure: WAPV Pre-thread Before Termination

(1) Cap

(2) Appropriate soft plug for cable diameter

(3) Inner shell

(4) Unterminated end of Ethernet cable

(5) Metal-shielded male RJ45 plug (plastic latching tab visible on top)

(6) Outer shell with soft circular washer placed inside (see note below)

Tip
If you look/feel inside the outer shell you will see that one end has larger rectangular keys (blocky bumps) on the inside. The larger keys are the ones that will mate with the female WAPV connector on the ES1 enclosure. The smaller keys inside the other end of the outer shell are the ones that will mate with the inner shell. The end wih smaller keys (which is shown closest in the photo above) will also receive the soft circular washer which will rest on a narrow shelf that circles the inside of the outer shell.

E.4 Terminate Cable with the Metal-Shielded RJ45 Plug

> **⚠ Important**
> This step should be performed by someone with the proper tools and expertise in building CAT5e / CAT6 network cables.

Expose the eight insulated wires and the drain or braid of the unterminated end of the Ethernet cable and then install the metal-shielded male RJ45 plug. This requires proper tools and expertise in building shielded network cables. The eight wires have to be in a particular order (the same order as the other end, typically T568B wiring standard) and all well-crimped into the RJ45 plug.

For reference, this is the T568B wiring order for RJ45. If the other end of your Ethernet cable uses T568B wire ordering then this is the order for crimping the wires into the metal-shielded male RJ45 connector. Make sure the drain wire or braided shield of the cable also makes good contact with the metal shield of the RJ45 connector.

Figure: RJ45 Male with T568B Wiring

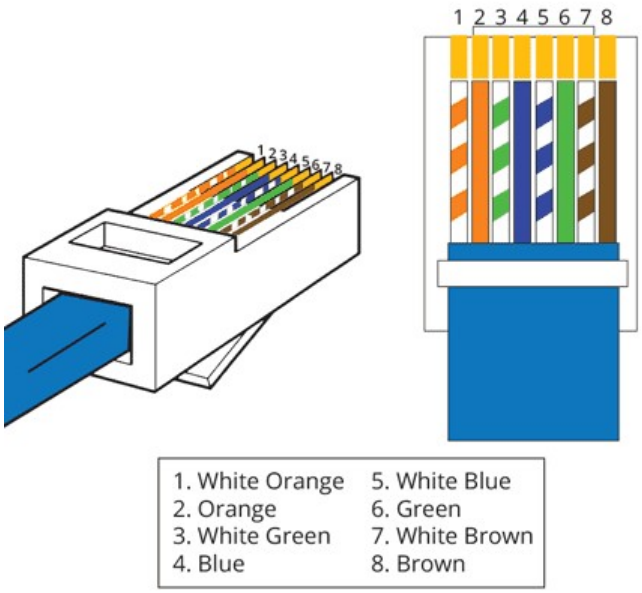

E.5 Test the Ethernet Cable

The terminated cable should then be tested with an Ethernet cable tester to check the continuity of all eight wires and the ground/shield. If problems occur installing the RJ45 plug, a typical CAT5e or CAT6 metal-shielded RJ45 plug of the same size and shape should be a suitable substitute.

Figure: Cable Terminated with Metal-shielded RJ45 Plug

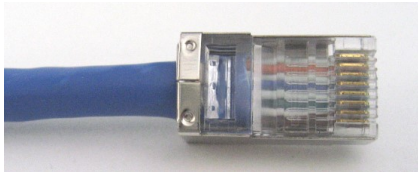

E.6 Preparation After Termination

- First thread the soft circular washer over the RJ45 plug.
- Then look/feel inside the outer shell to determine the correct orientation for threading it over the RJ45 connector. The closest end in the following image shows the end of the outer shell that should

be threaded over the RJ45 plug. Note that this end has the smaller key blocks and the narrow shelf where the soft circular washer will rest.

Figure: WAPV: End of Outer Shell that Mates with Inner Shell

Figure: WAPV Pre-thread After Termination

Figure: WAPV Preparation After Termination

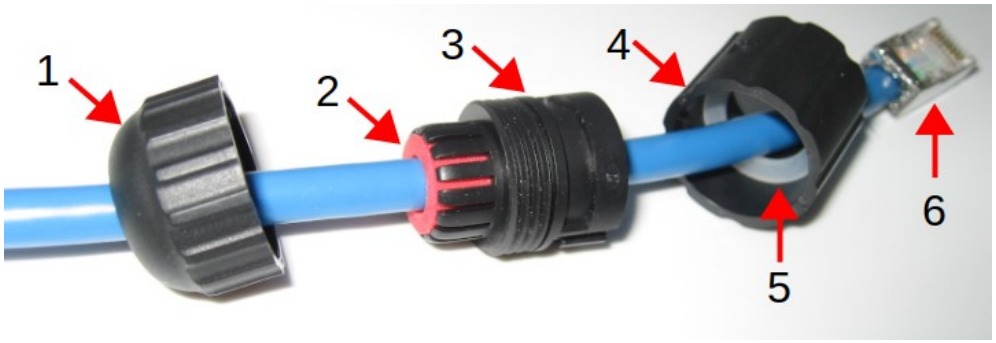

(1) Cap

(2) Soft plug pressed most of the way into inner shell (wide end ridge of soft plug remains outside)

(3) Inner shell

(4) Outer shell (thread the soft washer over the RJ45 first, then the outer shell, then place washer in outer shell)

(5) Soft circular washer positioned on the “shelf” inside inner shell

(6) Metal-shielded male RJ45 plug crimped on cable (the termination)

E.7 Mate Inner and Outer Shells

Next, the inner and outer shells are mated with a bayonet-like action. It’s very important that the soft circular washer stay in place in on the narrow “shelf” the outer shell while doing this.

> **Tip**
> Although the next photo was shot with the cable laying on a flat surface, holding the shells more vertically with the outer shell lower may help keep the white soft circular washer in position on the narrow shelf inside the outer shell.

Inside the outer shell (where it faces the inner shell) are the small square keys (block-like bumps). Line up those keys with the recessed channels on two sides of the inner shell. Then hold the inner shell (1) and press the outer shell (2) onto the inner shell. Use some pressure to get around the tight corner of the channel, then rotate the outer shell in the direction shown by the yellow arrow below. Once mated, the outer shell should be loosely trapped over the inner shell. Now look inside the end of the outer shell (where 2 is pointing) and make sure the white soft circular washer is laying flat. If not, fix.

Figure: Lining Up and Mating Inner and Outer Shells

(note: Cap is not shown above but is on the cable to the left of the inner shell)

(1) Inner shell with soft plug in place (wide end ridge of soft plug remains outside)

(2) Outer shell

(3) Metal-shielded RJ45 plug

The following photo shows how the inner and outer shells appear after they are mated with each other.

Figure: Mated Inner and Outer Shells

E.8 Connect RJ45 to Female WAPV RJ45

Connect the RJ45 plug to the RJ45 port on the ES1.

Figure: RJ45 Connection

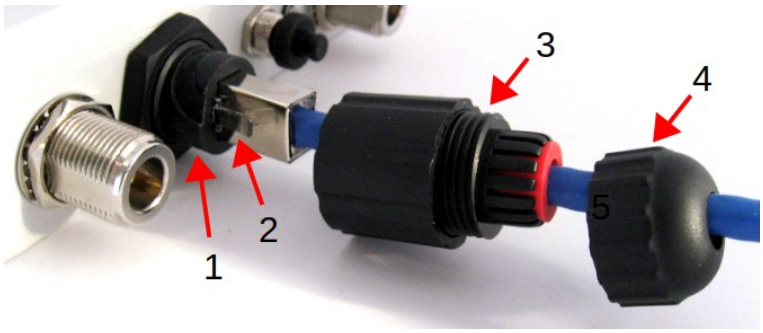

(1) Female WAPV RJ45 port on ES1 enclosure (will be on the bottom when ES1 is mounted)

(2) Male metal-shielded RJ45 plug (arrow pointing at the plastic latching tab)

(3) Combined male WAPV inner and outer shell w/ soft plug and soft circular washer

(4) Cap

Note the location of the RJ45 plug's plastic latching tab, pointed at by arrow (2) in the photo above.

E.9 Mate and Then Cap the WAPV

Look inside the end of the combined male WAPV shell that faces the RJ45 plug. You should be able to see the soft circular washer laying flat, and directly beneath that see the RJ45-shaped (keystone-shaped). The keystone-shaped hole is like a rectangle with an extra small rectangular notch on one side. This notch (at arrow 2 below) will need to be lined up to fit over the plastic latching tab of the RJ45 plug (at arrow 2 above) when mating the male connector to the female connector on the enclosure of the BreadCrumb ES1.

Figure: View inside the Combined Shells

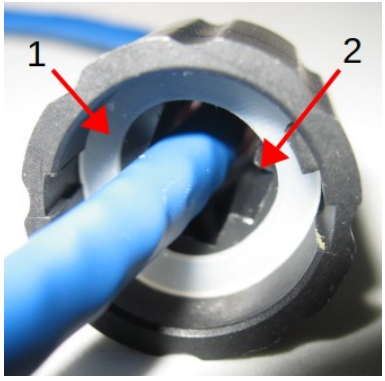

(1) Soft circular washer laying flat on its shelf in the outer shell

(2) RJ45/Keystone-shaped hole, arrow (2) pointing at the notch

To mate the WAPV male (cable) and WAPV female (enclosure) parts:

- Align the keystone hole's notch with the plastic latching tab of the RJ45 plug and slide the WAPV combined shell over the RJ45 plug.
- Next, rotate the outer shell gently left and right while pressing forward until the shell's rectangular keys locate the matching channels in the outside of the female WAPV, and push the combined shell further forward onto the female WAPV.
- Now bayonet the outer shell forward and clockwise (shown below by the yellow arrow below) to connect the male WAPV to the female WAPV.
- To complete the mating, firmly screw the cap clockwise onto the combined male WAPV shells.

Figure: WAPV: Mating Male and Female WAPV

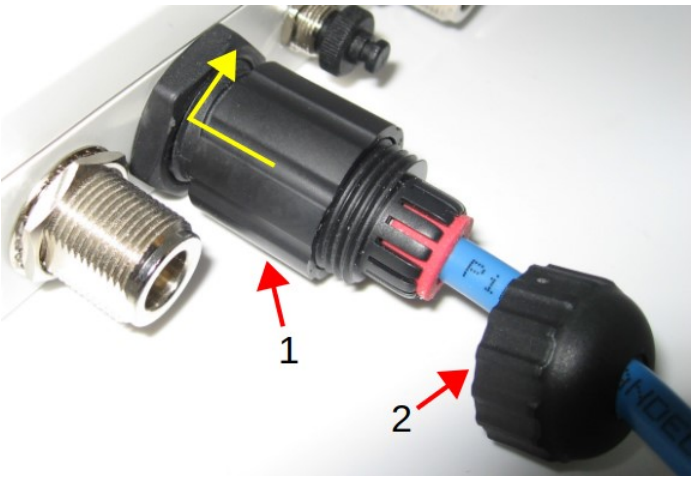

(1) Combined male WAPV inner and outer shell w/ soft plug (and soft circular washer is inside)

(2) Cap

Figure: Fully Mated WAPV Connection

> **⚠ Note**
> Even though these parts should form a sealed connection, Rajant recommends taping all outdoor connections. For general information on taping connections, see the documents *Waterproofing Rajant BreadCrumb RF Connections* and *Waterproofing Rajant BreadCrumb RF Connections* in the *Technical Bulletins* appendix of this guide.

Appendix F: Mounting Instructions

The BreadCrumb ES1 has two mounting holes which are found on the center left and right of the front and back of the ES1. The mounting holes are 131 mm (5.15 inches) apart (center to center) and are intended for M4 machine screws with washers to distribute the pressure on the plastic.

The two mounting holes are accessed from the front of the BreadCrumb ES1 via small flip-up access compartments on the left and right front border of the ES1.

Figure: BreadCrumb ES1 Front Flip-Up Mounting Hole Accesses

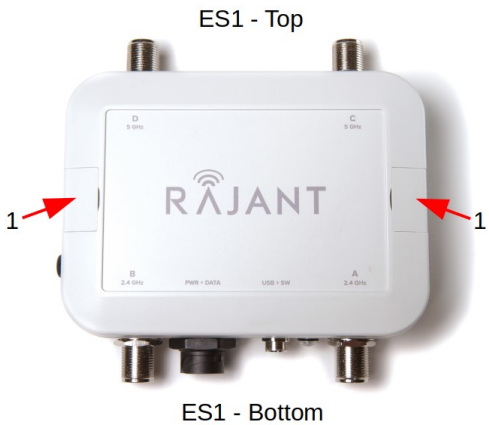

1. Front flip-up mounting hole accesses

Tip Regarding Orientation
The following simplified diagrams do not show the external features of the BreadCrumb ES1 such as the antenna ports, Ethernet port, Status LED. In all vertically-oriented diagrams, the side with the Ethernet port, M8 port, Status LED is facing down. The flip-up covers on the front of the mounting hole accesses are also not shown in the following diagrams.

The two mounting holes are located on the back of the BreadCrumb ES1 as shown below.

Figure: BreadCrumb ES1 Back Mounting Holes

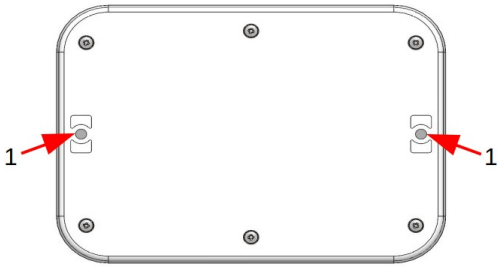

1. Mounting holes from back of ES1

A pole mounting bracket and a 35mm DIN rail mounting bracket are available for the BreadCrumb ES1.

F.1 Pole Mounting Bracket

The pole mounting bracket for BreadCrumb ES1 attaches to the back of the ES1 as described below. The ES1 pole mount bracket is Rajant P/N 12-100115-001.

The following diagram shows a BreadCrumb ES1 with pole mounting bracket attached. Note that the bracket has a choice of two pairs of slots where a hose clamp can be threaded. A hose clamp for a narrow diameter pole should be threaded only through the inner pair of slots (thread the hose clamp down into

one slot and up through the matching slot of the pair). A hose clamp for a wider diameter pole should be threaded only through the outer pair of slots. Hose clamps ½ to ¾ inch wide may be used.

It may be easier to thread the hose clamp before attaching the pole mounting bracket to the BreadCrumb ES1. Continue for the correct use of washers and nut when attaching the pole mounting bracket.

Figure: BreadCrumb ES1 Pole Mounting Bracket Attached

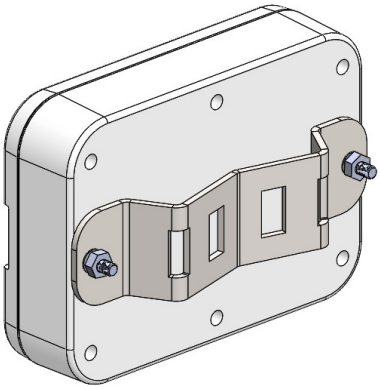

The mounting holes for attaching the pole mount bracket are accessible from the front of the BreadCrumb ES1 enclosure via small flip-up accesses on the left and right borders of the front of the ES1 enclosure.

The following diagram shows the order of washers, lock washer and nut used when attaching one end of the ES1 pole mounting bracket to the enclosure of the BreadCrumb ES1. Both ends of the pole mounting bracket should be attached to the BreadCrumb ES1. Some may wish to first thread the hose clamp through the slots of the pole mounting bracket (using the inner pair of slots for a smaller diameter pole/hose clamp, the outer pair of slots for a larger diameter pole/hose clamp).

Figure: Attaching the Pole Mounting Bracket to the BreadCrumb ES1

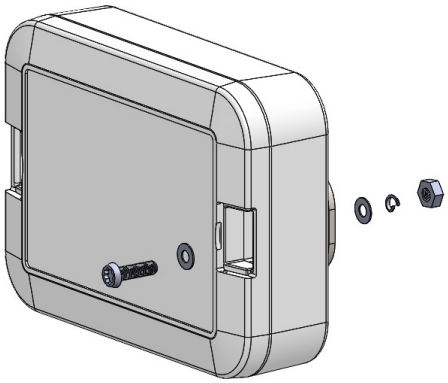

The attachment order of parts from front to back are:
M4 machine screw, washer, BreadCrumb ES1 (front to back), pole mounting bracket, washer, lock washer, nut

If the hose clamp was not threaded on before attaching the pole mounting bracket to the ES1, thread it through the pole mounting bracket now. The hose clamp may then be tightly secured around a pole.

Figure: BreadCrumb ES1 Attached to a Pole

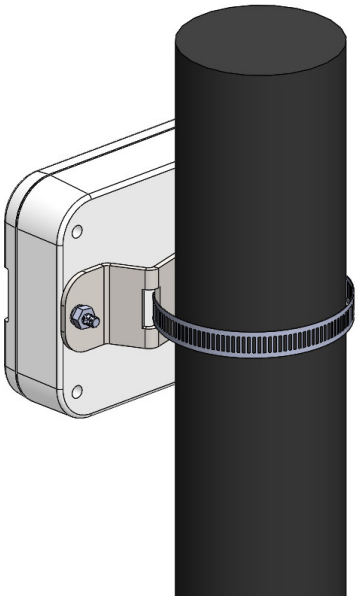

F.2 DIN Rail Mounting Bracket

The DIN rail mounting bracket for BreadCrumb ES1 attaches to the back of the ES1 as described below. This bracket assembly can be attached to a 35 mm top hat DIN rail.

The following diagrams show a BreadCrumb ES1 with DIN rail mounting bracket attached. In these diagrams, the DIN rail mounting bracket is attached so the DIN rail clip will be over the left side of the ES1 (the side with the protective vent). It is also possible to attach the mounting bracket with the DIN rail clip portion over the right side of the ES1. The end of the bracket where the DIN rail clip attaches has a choice of two screwholes in the middle so the DIN rail clip can be attached in the proper orientation whether the bracket is mounted over the left or right side of the ES1.

Reminder Regarding Orientation
The following simplified diagrams do not show the external features of the BreadCrumb ES1 such as the antenna ports, Ethernet port, Status LED. In all vertically-oriented diagrams, the side with the Ethernet port, M8 port, Status LED is facing down. The flip-up covers on the front of the mounting hole accesses are also not shown in the following diagrams.

Figure: BreadCrumb ES1 DIN Rail Mounting Bracket Attached (Back Corner View)

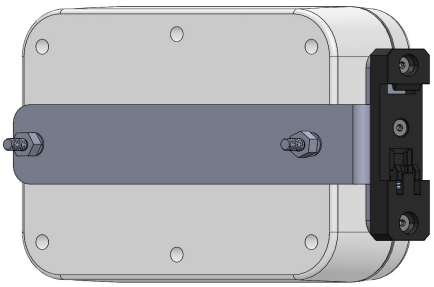

Figure: BreadCrumb ES1 DIN Rail Mounting Bracket Attached (Front View)

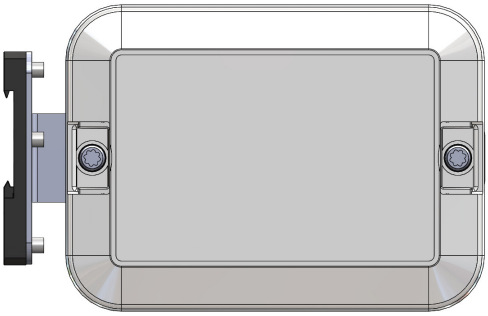

Note
The proper orientation for the DIN rail clip is with the fixed (non spring-loaded) end up, and the spring-loaded end of the DIN rail clip at the bottom. This insures that the fixed end of the clip will bear the weight. The Ethernet port, M8 port and status LED are on the bottom side of the BreadCrumb ES1.

The mounting holes for attaching the DIN rail mounting bracket are accessible from the front of the BreadCrumb ES1 enclosure via small flip-up accesses on the left and right borders of the front of the ES1 enclosure.

The following diagram shows the order of washers, lock washer and nut used when attaching one end of the ES1 DIN rail mounting bracket to the enclosure of the BreadCrumb ES1. The DIN rail mounting bracket should be attached to both mounting holes of the BreadCrumb ES1.

Figure: Attaching the DIN Rail Mounting Bracket to the BreadCrumb ES1 (Top View)

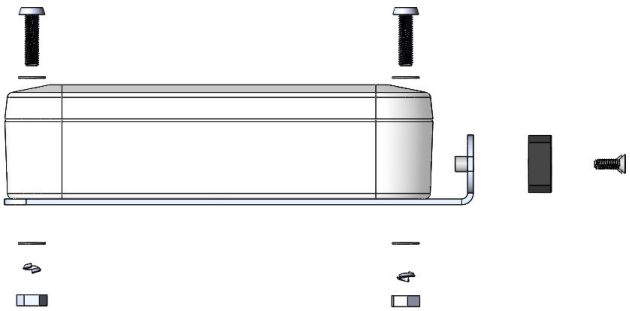

The attachment order of parts from front to back are:
M4 machine screw, washer, BreadCrumb ES1 (front to back), DIN rail mounting bracket, washer, lock washer, nut

The DIN rail clip is attached to the end of the DIN rail mounting bracket using three machine screws.

Figure: Attaching the DIN Rail Mounting Bracket to the BreadCrumb ES1 (Front View)

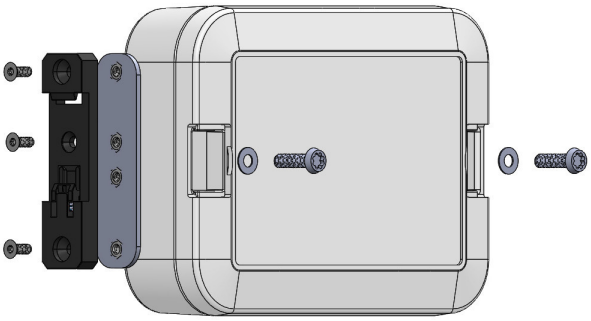

Figure: Attaching the DIN Rail Mounting Bracket to the BreadCrumb ES1 (Back View)

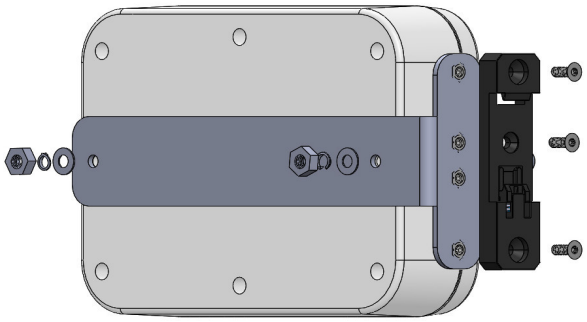

The BreadCrumb ES1 may now be attached to a 35 mm top hat DIN rail.

Appendix G: Technical Bulletins

G.1 Rajant Best Practices: Grounding and Surge Protection

July 11, 2018
Copyright © 2018, Rajant Corporation. All rights reserved.

G.1.1 Introduction

The Rajant BreadCrumb product line is designed to withstand the toughest conditions imposed by military and industrial scenarios. Although some basic protection from electrical surges is built into the design, this protection is not adequate to compensate for the damaging effects of high-energy electro-static discharge or lightning strike events. To ensure reliable operation and long service life, additional measures need to be taken to protect BreadCrumb equipment from electrical surges.

⚠ Important
Rajant equipment will most likely not survive a lightning strike even if the grounding and surge protection best practices detailed in this document are followed.

⚠ Important
It is not necessary for a lightning strike to hit equipment directly in order to cause damage. The electromagnetic forces caused by lightning are so powerful that even a strike that lands near the equipment may cause damage. The best practices detailed in this document are aimed at protecting the equipment from nearby strikes, rather than direct hits.

G.1.2 Environment

BreadCrumbs are often installed in environments susceptible to lightning, electro-static discharge (ESD), and other high-energy electrical surge events. A dry windy environment is more likely to create a large buildup of static energy that leads to electro-static discharges.

G.1.3 Recommendations

Rajant recommends the following best practices for installing BreadCrumb equipment (except the C1D2 – see the C1D2 User Guide for C1D2 installation):

- Use only shielded Ethernet cables with metal-shielded connectors. The metal-encased connectors provide the continuity of the ground from the BreadCrumb case to the PoE and AC ground or protective earth ground.
- Use an Ethernet surge protector for each utilized BreadCrumb Ethernet port.
- Use antenna surge protectors on all pole-mounted antennas.
- In order to avoid sparking and possible damage to the device, be sure to connect the surge protector and the powered Ethernet cable to the BreadCrumb before applying power to the PoE power supply.
- Always power off a BreadCrumb device prior to connecting or disconnecting external antennas.
- Ground all equipment:
    - Ground the BreadCrumb enclosure.
    - Ground the BreadCrumb power supply.
    - Ground the Ethernet surge protector(s).
    - If antennas are not connected directly on BreadCrumb antenna ports and offer exposed metal bases, then ground the bases of the antennas. If antennas are connected directly on BreadCrumb antenna ports, then they will be grounded through the BreadCrumb enclosure.

We continue to elaborate on these recommendations in the following sections.

G.1.4 Ethernet Surge Protection

An Ethernet cable provides a path for a power surge to enter a BreadCrumb. The longer the cable, the more susceptible it is to picking up surges. In case of a lightning strike, the cable will act as an antenna and absorb the electro-magnetic wave caused by the strike even from a long distance. Surges through the Ethernet port can be suppressed by an Ethernet surge protector.

Selecting Ethernet Surge Protectors

There are several aspects to consider when selecting an Ethernet surge protector:

- It is important to know how large a surge the protector can handle and how many strikes it can withstand before needing to be replaced.
- Be sure that the surge protector supports passive PoE. Installing the wrong surge protector on the PoE line can prevent the BreadCrumb from getting enough power to turn on.
- The surge protector will cause a voltage drop in the PoE power carried over the Ethernet cable. The voltage drop should be small enough so that enough power reaches the BreadCrumb.
- The surge protector will cause some degradation to the Ethernet data signal. Be sure that the degradation to the signal does not severely impact Ethernet throughput, especially on longer Ethernet cable runs.

Rajant recommends the L-Com ALS-CAT6HPW Ethernet surge protector (www.l-com.com, P/N: ALS-CAT6HPW) (see Figure 1).

Figure 1: L-Com ALS-CAT6HPW Ethernet Surge Protector

The features of this device are:

- Designed to meet the GR-1089 Intra-Building surge protection requirements.
- Weatherproof ABS enclosure with gasketed cover and PG16 cable glands for outdoor operation.
- External ground clamp to provide a tie point for earth ground.
- Compatible with 10/100/1000 Base-T equipment.
- Compatible with CAT5, CAT5e and CAT6 cables.
- Robust, two-stage TVS diode and differential gas tube suppression.

- Tested and fully compatible with Rajant BreadCrumb ME3, ME4, and LX4 devices.

Installing the Ethernet Surge Protector

The Ethernet surge protector should be installed as close to the BreadCrumb as practical, and ideally within 50 cm (20 in) of the device. The surge protector should be grounded as described in its operating manual, and according to local electrical codes and industry best practices. When a BreadCrumb is powered through its Ethernet port (i.e., PoE), the surge protector should *always* be installed between the BreadCrumb and its power source.

> **⚠ Warning**
> In order to avoid sparking and possible damage to the device, be sure to connect the surge protector and the powered Ethernet cable to the BreadCrumb before applying power to the PoE power supply.

G.1.5 Antenna Surge Protection

Antenna surge protectors should be used for all pole-mounted BreadCrumb antennas. Consider the following aspects when choosing an antenna surge protector:

Rajant recommends the PolyPhaser GT-NFM-AL antenna surge protector (www.streakwave.com, P/N: GT-NFM-AL) (see Figure 2).

Figure 2: PolyPhaser GT-NFM-AL antenna surge protector.

> **⚠ Warning**
> In order to avoid sparking and possible damage to the device, be sure to connect the antenna surge protector to the BreadCrumb before applying power to the BreadCrumb power supply.

G.1.6 The Goal: The Ground

The goal is to have a continuity of ground from the BreadCrumb to the destination AC ground or protective earth ground.

If the BreadCrumb uses an AC PoE, the ground pin of the AC plug should be plugged into a properly grounded AC socket.

If the BreadCrumb uses a DC PoE, the grounding connections of the DC PoE should be properly connected to an earth ground. Use 10 AWG or lower (larger) gauge wire for grounding cables and be careful to avoid any sharp bends. Examples of earth ground are:

G.2 Waterproofing Rajant BreadCrumb RF Connections

TECH SERVICE BULLETIN

ISSUE

For BreadCrumb products deployed in outdoor installations, it is recommended to waterproof all RF connections to the BreadCrumb. Waterproofing is recommended for both direct attach antenna applications and cabled antenna applications.

REQUIRED MATERIALS

Self-fusing, all weather, ethylene propylene rubber (EPR) tape. McMaster-Carr 7682A65 or equivalent.

Scotch® Premium Vinyl Electrical Tape 88-Super-3/4x44FT, 3/4 in x 44 ft (19 mm x 13.4 m)

SEALING BREADCRUMB RF CONNECTIONS

1. Clean the RF connectors on the BreadCrumb and the antenna. Clean the RF coupler (if used). For cabled antennas, clean the connector on the antenna cable that connects to the BreadCrumb. Allow all connections to dry. Attach antennas or antenna cables to the BreadCrumb.
2. For direct attach antenna applications, identify weep holes that may be present in the body of the antenna. Do not cover the weep holes with sealing tape as they are required to allow condensation to drain from the antenna.
3. The sealing process applies a single layer of EPR tape and two layers of all-weather electrical tape. For a direct attach antenna, the tape is applied from the RF connector on the antenna to the case of the Breadcrumb. For an antenna that is connected to a cable, the tape is applied starting 1" behind the cable connector and continues to the case of the BreadCrumb.

RAJANT	TITLE Tech Service Bulletin – Weatherproofing Direct Attach Antennas and RF Cables for Outdoor BreadCrumb Deployment	TSB# 03-100136-001

4. For either the direct attach antenna configuration, or the cabled antenna configuration, the installation sequence of each tape wrap is critical to the performance of the environmental seal.

   a. **Application of EPR tape layer:**
   Remove the backing liner from the EPR tape prior to installation. To maximize protection from water ingress, the layer of EPR tape must be applied opposite to the direction of water flow.

   For an RF connection to the top side of the BreadCrumb case, the wrap would start at the case of the BreadCrumb and wrap up to just above the antenna connector. For an RF connection to the bottom side of the BreadCrumb case, the wrap would start just below the antenna connector and wrap up to the BreadCrumb case.

   Slightly stretch the EPR tape while wrapping to insure a good seal. The target overlap of the EPR tape layer is ½ the width of the EPR tape. When the EPR tape is applied per this procedure, the seams of the EPR wrap layer will have full overlap in the direction of water flow. Figure 1 and Figure 2 show a properly installed layer of EPR tape for a directly mounted antenna installed on the top side of the BreadCrumb (antenna ray dome facing up). Note the full overlap of the EPR tape seams in the direction of water flow.

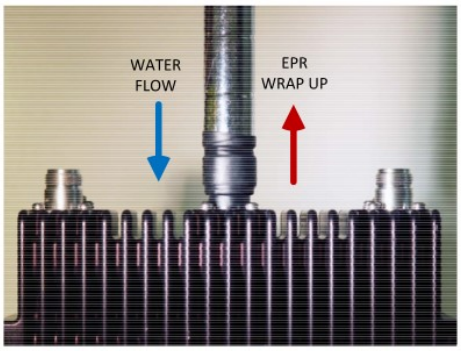

FIGURE 1 VIEW OF EPR TAPE APPLIED TO DIRECT ATTACH ANTENNA INSTALLED ON TOP SIDE OF BREADCRUMB

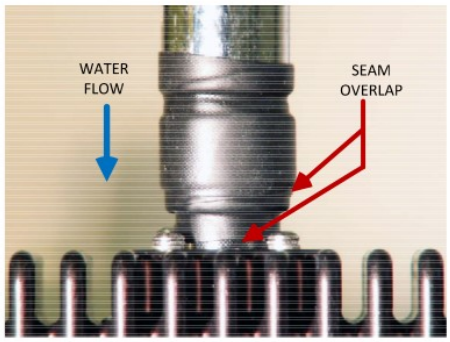

FIGURE 2 CLOSE-UP VIEW OF SEAM OVERLAP OF EPR TAPE

b. **Application of All-Weather Electrical Tape Layers**
Two layers of all-weather electrical tape are applied over the single layer of EPR tape. To maximize protection from water ingress, it is critical that the second layer of electrical tape is wrapped in the opposite direction of water flow (wrap up).

For an RF connection at the top side of the BreadCrumb case, the first wrap layer of all-weather electrical tape would start at the antenna connector just above EPR tape and wrap down to the case of the BreadCrumb. The second layer of all-weather electrical tape would start at the case of the BreadCrumb and wrap up to overlap the first layer of electrical tape.

For an RF connection to the bottom side of the BreadCrumb case, the first wrap layer of all-weather electrical tape would start at the BreadCrumb case and wrap down to antenna connector just past the layer of EPR tape. The second layer of all-weather electrical tape would wrap up toward the case of the BreadCrumb and fully overlap the first layer of electrical tape.

Slightly stretch the all-weather electrical tape while wrapping to insure a good seal. The target overlap of the layer of all-weather electrical tape is ½ the width of the tape.

FIGURE 3 and FIGURE 4 show the two layers of all-weather electrical tape for a directly mounted antenna installed on the top side of the BreadCrumb (antenna ray dome facing up). Note: FIGURE 4 shows the full overlap of the tape seams in the direction of water flow.

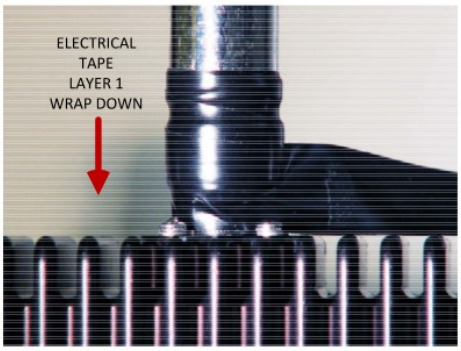

FIGURE 3 FIRST LAYER OF ALL-WEATHER ELECTRICAL TAPE APPLIED TO DIRECT ATTACH ANTENNA INSTALLED ON TOP SIDE OF BREADCRUMB

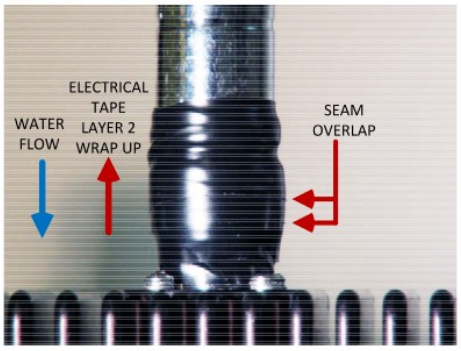

FIGURE 4 SECOND LAYER OF ALL-WEATHER ELECTRICAL TAPE APPLIED TO DIRECT ATTACH ANTENNA INSTALLED ON TOP SIDE OF BREADCRUMB

	SIZE A		TSB # 03-100136-001	A
	SCALE		Page 5 of 5	REV

G.3 Waterproofing BreadCrumb Cable Connections

Rajant Technical Service Bulletin: Instructions to properly seal Squid cables

Issue:

For BreadCrumb products deployed in outdoor installations, it is recommended to waterproof all Squid cable connections to the BreadCrumb to prevent any liquid from seeping into the connectors.

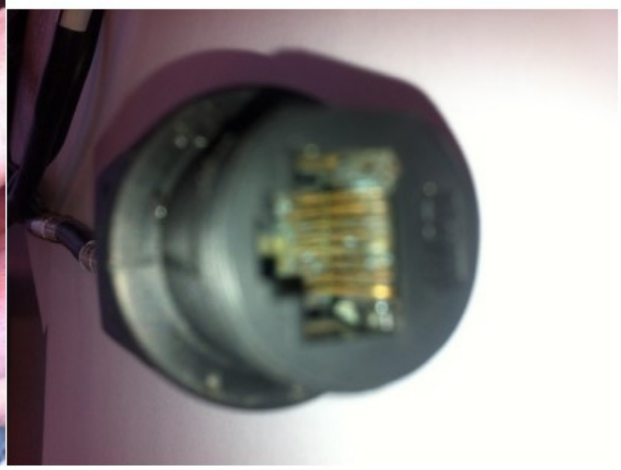

Items needed:

Self fusing weather proofing tape

http://www.amazon.com/Emergency-Repair-Tape-Self-Fusing-Silicone/dp/B00KBSWRDO/

Star Brite Liquid Electric tape (do not use Gardner Bender brand Liquid tape.)

http://www.amazon.com/Star-brite-84134-Liquid-Electrical/dp/B000Y82XVC/

Di-Electric Grease

Use the Di-Electric Grease shown above to fill any gaps in the threads of the connectors.

http://www.amazon.com/CRC-Technician-Di-Electric-Precision-Applicator/dp/B000CCIDAA/

Solution:

Properly apply Di-Electric Grease, Fusing Silicone weatherproofing tape and Starbrite liquid electric tape to “weather proof” the connectors.

Below are instructions on how to seal both the Amphenol and LTW connectors to prevent any fluid seepage.

> ***NOTE:*** *A BreadCrumb LX4 is used for the photos.*

Apply a small strip to the female threads of Eth connectors, USB port and the outside of the female Amphenol connector. The brand of Di-Electric grease is unimportant. However a gel type is preferred.

Make the connections ensuring that the connectors are secure but not over tightened which may cause cross threading on the LTW connectors. Ensure that the Amphenol connector is properly locked into place.

Wrap the Amphenol connector with Fusing Silicone weatherproofing tape starting at the bottom and wrapping upward so that overlaps are at the bottom. Stop at the top of the connector as shown below.

Add a thin layer of Liquid electrical tape to the top of the connector overlapping the self fusing silicone tape to seal the top of the connector as seen above.

Next connect the LTW connector on the Eth0 port and replace the caps on the Eth1 and USB ports. If the Eth 1 or the USB port is going to be used connect the LTW side of the cable to the squid. Apply a thin layer of Star Brite Liquid tape. Just enough to seal the gap between the cap and threads to the thread side of the cap or connector making sure to pay attention to the flat spot on the female thread side. The liquid tape should be allowed to dry for approximately 5 minutes before moving the connectors.

The Liquid Electric tape should remain pliable so it can be removed to service the radio.

Do not use Gardner Bender brand Liquid tape. This brand tends to become very hard over long periods of time which may impair removal.

Additional Notes:

When installing the BreadCrumb, the Squid cable should be secured but hang down. Bending the Squid cable up may compromise the integrity of the adhesive in the heatshrink allowing liquid to build up and possibly flow into the cable.

This does not protect against pressure washing.

G.4 BreadCrumb Models Support Only Passive PoE

> ⚠ **IMPORTANT**
> This applies to many Rajant BreadCrumb models, not just those listed. Consult your BreadCrumb model user guide.

RAJANT Product TIB Notice No.: 2015002

Date: 10/30/2015

Technical Information Bulletin

Product(s) Affected: Rajant BreadCrumb® ME4, LX5, and JR2 models; passive PoE devices

Description: The first ME4 Ethernet port (eth0), both LX5 Ethernet ports (eth0, eth1), and the only Ethernet port on the JR2 support passive power over Ethernet (passive PoE). Unlike other PoE methods such as IEEE 802.3af/at, passive PoE does not include any kind of handshaking or voltage checking.

Some Cisco switches support both IEEE 802.3af/at PoE or their own proprietary version. Their default mode is called “auto”. In “auto” mode, the switch will try to automatically detect what type of PoE the plugged in device supports. The Cisco switch auto method does not work with passive PoE equipment including plugging into the data input ports of Rajant PoE devices that are used with the ME4, LX5, and JR2. The link will not come up or will “flicker” up and down.

To connect a Cisco PoE switch to a Rajant PoE capable device, you must turn off the PoE capability of this port. You must set the “power inline” setting of the port to “never”. http://www.cisco.com/c/en/us/td/docs/switches/lan/catalyst4500/122/25ew/configuration/guide/conf/PoE.html includes information for configuring the port.

Remarks:

Do not attempt to combine Cisco automatic PoE detection with the input port of Rajant passive PoE devices used with the ME4, LX5, and JR2 models. Set the “power inline” setting of the port to “never”. Contact a technical support representative for further information.

Page 1 of 1

G.5 Never Apply Power to the Data Input Port of a Rajant Mid-Span Power over Ethernet (POE) Power Supply

⚠ IMPORTANT
This applies to all Rajant BreadCrumb models using passive PoE power supplies.

RAJANT Product TSB Notice No.: 03-100162-001

TECH SERVICE BULLETIN

Never Apply Power to the Data Input Port of a Rajant Mid-Span Power over Ethernet (POE) Power Supply

Summary:

With exception to the Rajant VHDC-24V50W-GbE, never connect the data input port of any Rajant supplied mid-span POE power supply to a POE powered data port. Rajant 10/100 POEs will not work properly, and Rajant 10/100/1000 POEs will be permanently damaged causing the Ethernet data link to fail.

Background:

Many Rajant BreadCrumb models including KM3, ME4, ME3, LX5, LX4 and the JR family do not support 802.3 af/at automatic power negotiation. These BreadCrumb models must be powered from Rajant-approved passive mid-span POE power supplies. Rajant mid-span POE power supplies do not support 802.3 af/at automatic power negotiation. With exception to the Rajant VHDC-24V50W-GbE, the data input port of all other Rajant POE power supplies must never be connected to a POE powered data port.

The Ethernet data lines of the Rajant 10/100/1000 AC/DC mid-span POE power supply are protected by low voltage TVS diodes. These protection diodes are intended to prevent damage to equipment from short duration voltage transients, such as electrostatic discharge. The TVS diodes will fail to a permanent short circuit condition if continuous DC voltage is applied. When the TVS diodes are damaged, the POE data path will no longer work. The Ethernet data link will fail, or will never form.

Field Test:

Use the following procedure to test a Rajant mid-span POE for data path damage.

1. Remove the AC power cord from the Rajant POE.

2. Using two data cables, connect both the data INPUT and data plus POE OUTPUT port of the Rajant POE to an unmanaged switch.
3. Confirm that a data link is formed by inspecting the link lights on the Ethernet switch ports.
4. If the POE does not form a data link on both ports of the Ethernet data switch, replace the POE with a new one.

Mitigation:

The recommended best practice is to only connect the Rajant POE IN port to a non-POE Ethernet switch. Always connect the OUT port of a Rajant POE power supply to a BreadCrumb.

If only a POE switch is available, a data isolation transformer, such as L-COM BT-CAT6-P1 may be used with Rajant POE power supplies. Connect the data port of the L-COM BT-CAT6-P1 to the POE switch port, and connect the DATA+POWER port of the L-COM BT-CAT6-P1 to the Rajant POE power supply data input port.

G.6 Installation Constraints for Rajant AC Powered Accessory POE Power Supplies

Product TSB Notice No.: 03-100163-001

TECH SERVICE BULLETIN

The approved use of Rajant supplied AC powered mid-span POE power supplies (as shown in the photo) is limited to indoor, environmentally sheltered, non-damp locations that are isolated from shock or vibration. The AC powered POE power supplies are not sealed for dust or water ingress, and are not intended to operate in an environment with condensing humidity. The construction of these POE models is not ruggedized for exposure to mechanical shock or vibration.

Failure to observe the recommended installation restrictions may result in network outages and poor network performance as POE device failure is likely, and will void the Rajant warranty of the accessory POE. Damage to a Rajant BreadCrumb resulting from misuse of the AC powered POE may not be covered by the BreadCrumb warranty.

Rajant Corporation does offer DC powered midspan POE models – namely the VHDC series – that are suitable for use in non-environmentally sheltered locations, such as vehicles and outdoor trailers. Verify the ingress performance of the specific Rajant VHDC model on the product datasheet when selecting a midspan POE for a specific application.

Appendix H: Rajant End User License Agreement

IMPORTANT: PLEASE READ THIS END USER LICENSE AGREEMENT CAREFULLY. IT IS ENCLOSED IN THE SOFTWARE PACKAGE AND /OR PRESENTED ELECTRONICALLY WHEN ACCESSING THE SOFTWARE. BY CLICKING "I AGREE", YOU ARE AGREEING TO BE BOUND BY THE TERMS OF THIS LICENSE. IT IS VERY IMPORTANT THAT YOU CHECK THAT YOU ARE PURCHASING RAJANT SOFTWARE OR EQUIPMENT FROM AN APPROVED SOURCE AND THAT YOU, OR THE ENTITY YOU REPRESENT (COLLECTIVELY, THE "CUSTOMER") HAVE BEEN REGISTERED AS THE END USER FOR THE PURPOSES OF THIS RAJANT END USER LICENSE AGREEMENT. IF YOU ARE NOT REGISTERED AS THE END USER YOU HAVE NO LICENSE TO USE THE SOFTWARE AND THE LIMITED WARRANTY IN THIS END USER LICENSE AGREEMENT DOES NOT APPLY. ASSUMING YOU HAVE PURCHASED FROM AN APPROVED SOURCE, DOWNLOADING, INSTALLING OR USING RAJANT OR RAJANT-SUPPLIED SOFTWARE CONSTITUTES ACCEPTANCE OF THIS AGREEMENT.

RAJANT CORPORATION OR ITS AFFILIATE LICENSING THE SOFTWARE ("RAJANT") IS WILLING TO LICENSE THIS SOFTWARE TO YOU ONLY UPON THE CONDITION THAT YOU PURCHASED THE SOFTWARE FROM AN APPROVED SOURCE AND THAT YOU ACCEPT ALL OF THE TERMS CONTAINED IN THIS END USER LICENSE AGREEMENT PLUS ANY ADDITIONAL LIMITATIONS ON THE LICENSE SET FORTH IN A SUPPLEMENTAL LICENSE AGREEMENT ACCOMPANYING THE PRODUCT OR AVAILABLE AT THE TIME OF YOUR ORDER (COLLECTIVELY THE "AGREEMENT"). TO THE EXTENT OF ANY CONFLICT BETWEEN THE TERMS OF THIS END USER LICENSE AGREEMENT AND ANY SUPPLEMENTAL LICENSE AGREEMENT, THE SUPPLEMENTAL LICENSE AGREEMENT SHALL APPLY. BY DOWNLOADING, INSTALLING, OR USING THE SOFTWARE, YOU ARE REPRESENTING THAT YOU PURCHASED THE SOFTWARE FROM AN APPROVED SOURCE AND BINDING YOURSELF TO THE AGREEMENT. IF YOU DO NOT AGREE TO ALL OF THE TERMS OF THE AGREEMENT, THEN RAJANT IS UNWILLING TO LICENSE THE SOFTWARE TO YOU AND (A) YOU MAY NOT DOWNLOAD, INSTALL OR USE THE SOFTWARE, AND (B) YOU MAY RETURN THE SOFTWARE (INCLUDING ANY UNOPENED PACKAGE AND ANY WRITTEN MATERIALS) FOR A FULL REFUND, OR, IF THE SOFTWARE AND WRITTEN MATERIALS ARE SUPPLIED AS PART OF ANOTHER PRODUCT, YOU MAY RETURN THE ENTIRE PRODUCT FOR A FULL REFUND. YOUR RIGHT TO RETURN AND REFUND EXPIRES 30 DAYS AFTER PURCHASE FROM AN APPROVED SOURCE, AND APPLIES ONLY IF YOU ARE THE ORIGINAL AND REGISTERED END USER PURCHASER. FOR THE PURPOSES OF THIS END USER LICENSE AGREEMENT, AN "APPROVED SOURCE" MEANS (A) RAJANT; OR (B) A DISTRIBUTOR OR SYSTEMS INTEGRATOR AUTHORIZED BY RAJANT TO DISTRIBUTE / SELL RAJANT EQUIPMENT, SOFTWARE AND SERVICES WITHIN YOUR TERRITORY TO END USERS; OR (C) A RESELLER AUTHORIZED BY ANY SUCH DISTRIBUTOR OR SYSTEMS INTEGRATOR IN ACCORDANCE WITH THE TERMS OF THE DISTRIBUTOR'S AGREEMENT WITH RAJANT TO DISTRIBUTE / SELL THE RAJANT EQUIPMENT, SOFTWARE AND SERVICES WITHIN YOUR TERRITORY TO END USERS.

THE FOLLOWING TERMS OF THE AGREEMENT GOVERN CUSTOMER'S USE OF THE SOFTWARE (DEFINED BELOW), EXCEPT TO THE EXTENT: (A) THERE IS A SEPARATE SIGNED CONTRACT BETWEEN CUSTOMER AND RAJANT GOVERNING CUSTOMER'S USE OF THE SOFTWARE, OR (B) THE SOFTWARE INCLUDES A SEPARATE "CLICK-ACCEPT" LICENSE AGREEMENT OR THIRD PARTY LICENSE AGREEMENT AS PART OF THE INSTALLATION OR DOWNLOAD PROCESS GOVERNING CUSTOMER'S USE OF THE SOFTWARE. TO THE EXTENT OF A CONFLICT BETWEEN THE PROVISIONS OF THE FOREGOING DOCUMENTS, THE ORDER OF PRECEDENCE SHALL BE (1)THE SIGNED CONTRACT, (2) THE CLICK-ACCEPT AGREEMENT OR THIRD PARTY LICENSE AGREEMENT, AND (3) THE AGREEMENT. FOR PURPOSES OF THE AGREEMENT, "SOFTWARE" SHALL MEAN COMPUTER PROGRAMS, INCLUDING FIRMWARE AND COMPUTER PROGRAMS EMBEDDED IN RAJANT EQUIPMENT, AS PROVIDED TO CUSTOMER BY AN APPROVED SOURCE, AND ANY UPGRADES, UPDATES, BUG FIXES OR MODIFIED VERSIONS THERETO (COLLECTIVELY, "UPGRADES"), ANY OF THE SAME WHICH HAS BEEN RELICENSED UNDER THE RAJANT SOFTWARE TRANSFER AND RE-LICENSING POLICY (AS MAY BE AMENDED BY RAJANT FROM TIME TO TIME) OR BACKUP COPIES OF ANY OF THE FOREGOING.

License. Conditioned upon compliance with the terms and conditions of the Agreement, RAJANT grants to Customer a nonexclusive and nontransferable license to use for Customer's internal business purposes the Software and the Documentation for which Customer has paid the required license fees to an Approved Source. "Documentation" means written information (whether contained in user or technical manuals, training materials, specifications or otherwise) pertaining to the Software and made available by an Approved Source with the Software in any manner (including on CD-Rom, or on-line). In order to use the Software, Customer may be required to input a registration number or product authorization key

and register Customer's copy of the Software online at RAJANT'S website to obtain the necessary license key or license file.

Customer's license to use the Software shall be limited to, and Customer shall not use the Software in excess of, a single hardware chassis or card or such other limitations as are set forth in the applicable Supplemental License Agreement or in the applicable purchase order which has been accepted by an Approved Source and for which Customer has paid to an Approved Source the required license fee (the "Purchase Order").

Unless otherwise expressly provided in the Documentation or any applicable Supplemental License Agreement, Customer shall use the Software solely as embedded in, for execution on, or (where the applicable Documentation permits installation on non- RAJANT equipment) for communication with RAJANT equipment owned or leased by Customer and used for Customer's internal business purposes. No other licenses are granted by implication, estoppel or otherwise.

For evaluation or beta copies for which Rajant does not charge a license fee, the above requirement to pay license fees does not apply.

General Limitations. This is a license, not a transfer of title, to the Software and Documentation, and Rajant retains ownership of all copies of the Software and Documentation. Customer acknowledges that the Software and Documentation contain trade secrets of Rajant or its suppliers or licensors, including but not limited to the specific internal design and structure of individual programs and associated interface information. Except as otherwise expressly provided under the Agreement, Customer shall only use the Software in connection with the use of Rajant equipment purchased by the Customer from an Approved Source and Customer shall have no right, and Customer specifically agrees not to:

(i) transfer, assign or sublicense its license rights to any other person or entity (other than in compliance with any Rajant relicensing/transfer policy then in force), or use the Software on Rajant equipment not purchased by the Customer from an Approved Source or on secondhand Rajant equipment, and Customer acknowledges that any attempted transfer, assignment, sublicense or use shall be void;

(ii) make error corrections to or otherwise modify or adapt the Software or create derivative works based upon the Software, or permit third parties to do the same;

(iii) reverse engineer or decompile, decrypt, disassemble or otherwise reduce the Software to human-readable form, except to the extent otherwise expressly permitted under applicable law notwithstanding this restriction or except to the extent that Rajant is legally required to permit such specific activity pursuant to any applicable open source license;

(iv) publish any results of benchmark tests run on the Software;

(v) use or permit the Software to be used to perform services for third parties, whether on a service bureau or time sharing basis or otherwise, without the express written authorization of Rajant; or

(vi) disclose, provide, or otherwise make available trade secrets contained within the Software and Documentation in any form to any third party without the prior written consent of Rajant. Customer shall implement reasonable security measures to protect such trade secrets.

To the extent required by applicable law, and at Customer's written request, Rajant shall provide Customer with the interface information needed to achieve interoperability between the Software and another independently created program, on payment of Rajant's applicable fee, if any. Customer shall observe strict obligations of confidentiality with respect to such information and shall use such information in compliance with any applicable terms and conditions upon which Rajant makes such information available.

Software, Upgrades and Additional Copies. NOTWITHSTANDING ANY OTHER PROVISION OF THE AGREEMENT: (1) CUSTOMER HAS NO LICENSE OR RIGHT TO MAKE OR USE ANY ADDITIONAL COPIES OR UPGRADES UNLESS CUSTOMER, AT THE TIME OF MAKING OR ACQUIRING SUCH COPY OR UPGRADE, ALREADY HOLDS A VALID LICENSE TO THE ORIGINAL SOFTWARE AND HAS PAID THE APPLICABLE FEE TO AN APPROVED SOURCE FOR THE UPGRADE OR ADDITIONAL COPIES; (2) USE OF UPGRADES IS LIMITED TO RAJANT EQUIPMENT SUPPLIED BY AN APPROVED SOURCE FOR WHICH CUSTOMER IS THE ORIGINAL END

USER PURCHASER OR LESSEE OR OTHERWISE HOLDS A VALID LICENSE TO USE THE SOFTWARE WHICH IS BEING UPGRADED; AND (3) THE MAKING AND USE OF ADDITIONAL COPIES IS LIMITED TO NECESSARY BACKUP PURPOSES ONLY.

Proprietary Notices. Customer agrees to maintain and reproduce all copyright, proprietary, and other notices on all copies, in any form, of the Software and Documentation in the same form and manner that such copyright and other proprietary notices are included on the Software. Except as expressly authorized in the Agreement, Customer shall not make any copies or duplicates of any Software without the prior written permission of Rajant.

Term and Termination. The Agreement and the license granted herein shall remain effective until terminated. Customer may terminate the Agreement and the license at any time by destroying all copies of Software and any Documentation. Customer's rights under the Agreement will terminate immediately without notice from RAJANT if Customer fails to comply with any provision of the Agreement. Upon termination, Customer shall destroy or return to RAJANT all copies of Software and Documentation in its possession or control. All confidentiality obligations of Customer, all restrictions and limitations imposed on the Customer under the section titled "General Limitations" and all limitations of liability and disclaimers and restrictions of warranty shall survive termination of this Agreement. In addition, the provisions of the sections titled "U.S. Government End User Purchasers" and "General Terms Applicable to the Limited Warranty Statement and End User License Agreement" shall survive termination of the Agreement.

Customer Records. Customer grants to RAJANT and its independent accountants the right to examine Customer's books, records, accounts, and network configuration(s) during Customer's normal business hours to verify compliance with this Agreement. In the event such audit discloses non-compliance with this Agreement, Customer shall promptly pay to RAJANT the appropriate license fees, plus the reasonable cost of conducting the audit.

Export, Re-Export, Transfer and Use Controls. The Software, Documentation and technology or direct products thereof (hereafter referred to as Software and Technology), supplied by RAJANT under the Agreement are subject to export controls under the laws and regulations of the United States ("U.S.") and any other applicable countries' laws and regulations. Customer shall comply with such laws and regulations governing export, re-export, import, transfer and use of RAJANT Software and Technology and will obtain all required U.S. and local authorizations, permits, or licenses. RAJANT and Customer each agree to provide the other information, support documents, and assistance as may reasonably be required by the other in connection with securing authorizations or licenses. Information regarding compliance with export, re-export, transfer and use.

U.S. Government End User Purchasers. The Software and Documentation qualify as "commercial items," as that term is defined at Federal Acquisition Regulation ("FAR") (48 C.F.R.) 2.101, consisting of "commercial computer software" and "commercial computer software documentation" as such terms are used in FAR 12.212. Consistent with FAR 12.212 and DoD FAR Supp. 227.7202-1 through 227.7202-4, and notwithstanding any other FAR or other contractual clause to the contrary in any agreement into which the Agreement may be incorporated, Customer may provide to Government end user or, if the Agreement is direct, Government end user will acquire, the Software and Documentation with only those rights set forth in the Agreement. Use of either the Software or Documentation or both constitutes agreement by the Government that the Software and Documentation are "commercial computer software" and "commercial computer software documentation," and constitutes acceptance of the rights and restrictions herein.

Identified Components; Additional Terms. The Software may contain or be delivered with one or more components, which may include third-party components, identified by RAJANT in the Documentation, readme.txt file, third-party click-accept or elsewhere (e.g. on www.rajant.com) (the "Identified Component(s)") as being subject to different license agreement terms, disclaimers of warranties, limited warranties or other terms and conditions (collectively, "Additional Terms") than those set forth herein. You agree to the applicable Additional Terms for any such Identified Component(s).

Limited Warranty

Subject to the limitations and conditions set forth herein, RAJANT warrants that commencing from the date of shipment to Customer (but in case of resale by an Approved Source other than RAJANT, commencing not more than ninety (90) days after original shipment by RAJANT), and continuing for a period of the longer of (a) ninety (90) days or (b) the warranty period (if any) expressly set forth as applicable specifically to software in the warranty card accompanying the product of which the Software is a part (the "Product") (if any): (a) the media on which the Software is furnished will be free of defects in materials and workmanship under normal use; and (b) the Software substantially conforms to the Documentation. The date of shipment of a Product by RAJANT is set forth on the packaging material in which the Product is shipped. Except for the foregoing, the Software is provided "AS IS". This limited warranty extends only to the Software purchased from an Approved Source by a Customer who is the first registered end user. Customer's sole and exclusive remedy and the entire liability of RAJANT and its suppliers under this limited warranty will be (i) replacement of defective media and/or (ii) at RAJANT's option, repair, replacement, or refund of the purchase price of the Software, in both cases subject to the condition that any error or defect constituting a breach of this limited warranty is reported to the Approved Source supplying the Software to Customer, within the warranty period. RAJANT or the Approved Source supplying the Software to Customer may, at its option, require return of the Software and/or Documentation as a condition to the remedy. In no event does RAJANT warrant that the Software is error free or that Customer will be able to operate the Software without problems or interruptions. In addition, due to the continual development of new techniques for intruding upon and attacking networks, RAJANT does not warrant that the Software or any equipment, system or network on which the Software is used will be free of vulnerability to intrusion or attack.

No representation or other affirmation of fact, including but not limited to statements regarding capacity, suitability for use or performance of Software, whether made by Rajant employees or otherwise, shall be deemed to be a warranty for any purpose or give rise to any liability of Rajant whatsoever unless contained in this Agreement.

Restrictions. This warranty does not apply if the Software, Product or any other equipment upon which the Software is authorized to be used (a) has been altered, except by RAJANT or its authorized representative, (b) has not been installed, operated, repaired, or maintained in accordance with instructions supplied by RAJANT, (c) is assembled or deployed with non-authorized Rajant accessories; (d) has been subjected to abnormal physical or electrical stress, abnormal environmental conditions, misuse, negligence, or accident; or (e) is licensed for beta, evaluation, testing or demonstration purposes. The Software warranty also does not apply to (f) any temporary Software modules; (g) any Software not posted on RAJANT's Software Center; (h) any Software that RAJANT expressly provides on an "AS IS" basis on RAJANT's Software Center; (i) any Software for which an Approved Source does not receive a license fee; and (i) Software supplied by any third party which is not an Approved Source.

Hardware Limited Warranty

THE BREADCRUMB WIRELESS LAN UNITS ("BREADCRUMB"), EXCLUSIVE OF THE JR FAMILY OF BREADCRUMBS, PROVIDED UNDER THIS AGREEMENT ARE PROVIDED WITH A 1-YEAR WARRANTY AGAINST DEFECTS IN WORKMANSHIP OR MATERIAL UNDER ORDINARY USE. SUCH WARRANTY APPLIES ONLY TO THE BREADCRUMB DEVICE AND DOES NOT EXTEND TO ANY OTHER PRODUCTS, PRODUCTS OR SERVICES, INCLUDING BUT NOT LIMITED TO POWER SUPPLIES, CABLES, ANTENNAS, AND MOUNTING BRACKETS, EVEN IF PACKAGED OR SOLD WITH THE BREADCRUMB.

THE JR FAMILY OF BREADCRUMBS ARE WARRANTED ONLY AGAINST DEFECTIVE WORKMANSHIP FOR 90 DAYS WHEN DELIVERED NEW. RAJANT MAKES NO WARRANTY, AND DISCLAIMS ANY WARRANTY, EXPRESS OR IMPLIED AT LAW, ON THE JR FAMILY OF BREADCRUMBS' FITNESS FOR A PARTICULAR PURPOSE OR MERCHANTABILITY. MANUFACTURER'S RMA POLICIES AND PROCEDURES APPLY.

RAJANT PRODUCTS CLASSIFIED AS ACCESSORY ON MANUFACTURER'S PRICE LIST ARE WARRANTED AGAINST DEFECTS FOR A PERIOD OF 90 DAYS FROM DATE OF DELIVERY.

THE RAJANT HARDWARE LIMITED WARRANTY ONLY APPLIES WHEN GENUINE RAJANT HARDWARE AND AUTHORIZED ACCESSORIES ARE USED BY THE INSTALLER AND END USER. USE OF ANY NON-AUTHORIZED ACCESSORIES OR PERIPHERAL EQUIPMENT VOIDS THE RAJANT LIMITED HARDWARE LIMITED WARRANTY.

Unless otherwise listed on this Warranty Schedule, Rajant warrants to the purchaser that the Products will perform in all material respects in accordance with their written specifications for a period of ninety (90) days from the date of purchase. Reseller and purchaser's sole and exclusive right and remedy, and Rajant's sole and exclusive obligation and liability, with respect to any breach of the foregoing warranty shall be that, upon receipt by Rajant from Reseller or purchasers of written notice of the breach in reasonable detail so as to permit Rajant to duplicate the failure to so perform, which notice is received by Rajant within thirty (30) days after Reseller or purchaser discovers the failure, Rajant shall – after duplicating the failure – exercise its commercially reasonable efforts to deliver to Reseller or purchaser a replacement or repaired Product at Rajant's discretion. Rajant replacement parts used in such replacement may be new or equivalent to new. Rajant's obligations hereunder are conditioned upon the return of the affected Product in accordance with Rajant's then-current Return Material Authorization (RMA) procedures.

This warranty shall not apply to any Product that has been subjected to unusual physical, environmental or electrical stress. The warranty shall not apply to any problems or non-performance directly resulting from Reseller or purchaser's hardware, software, network(s) and/or host system(s) or the combination, operation or use of the Product with such hardware, software, network(s) and/or host system(s), or which results from any alteration or modification to the Product or its components by anyone other than Rajant. The warranty also does not cover any (a) Product for which the serial number has been removed or made illegible; (b) freight costs to the repair center; (c) scratches or other cosmetic damage to Product surfaces that do not affect the operation of the Product; and (d) normal and customary wear and tear.

The date of shipment of a Product by Rajant is set forth on the packaging material in which the Product is shipped. This limited warranty extends only to the original user of the Product.

Replacement, Repair or Refund Procedure for Products Covered by Warranty

Rajant will use commercially reasonable efforts to ship a repaired or replacement part within fifteen (15) working days after receipt of the RMA request. Actual delivery times may vary depending on Reseller's or purchaser's location.

To Receive a Return Materials Authorization (RMA) Number

Please contact the party from whom you purchased the Product. If you purchased the Product directly from Rajant, contact your Rajant Sales and Service Representative or email support@rajant.com.

DISCLAIMER OF WARRANTY

EXCEPT AS SPECIFIED IN THIS WARRANTY SECTION, ALL EXPRESS OR IMPLIED CONDITIONS, REPRESENTATIONS, AND WARRANTIES INCLUDING, WITHOUT LIMITATION, ANY IMPLIED WARRANTY OR CONDITION OF MERCHANTABILITY, FITNESS FOR A PARTICULAR PURPOSE, NON-INFRINGEMENT, SATISFACTORY QUALITY, NON-INTERFERENCE, ACCURACY OF INFORMATIONAL CONTENT, OR ARISING FROM A COURSE OF DEALING, LAW, USAGE, OR TRADE PRACTICE, ARE HEREBY EXCLUDED TO THE EXTENT ALLOWED BY APPLICABLE LAW AND ARE EXPRESSLY DISCLAIMED BY RAJANT, ITS SUPPLIERS AND LICENSORS. TO THE EXTENT THAT ANY OF THE SAME CANNOT BE EXCLUDED, SUCH IMPLIED CONDITION, REPRESENTATION AND/OR WARRANTY IS LIMITED IN DURATION TO THE EXPRESS WARRANTY PERIOD REFERRED TO IN THE "LIMITED WARRANTY" SECTION ABOVE. BECAUSE SOME STATES OR JURISDICTIONS DO NOT ALLOW LIMITATIONS ON HOW LONG AN IMPLIED WARRANTY LASTS, THE ABOVE LIMITATION MAY NOT APPLY IN SUCH STATES. THIS WARRANTY GIVES CUSTOMER SPECIFIC LEGAL RIGHTS, AND CUSTOMER MAY ALSO HAVE OTHER RIGHTS WHICH VARY FROM JURISDICTION TO JURISDICTION. This disclaimer and exclusion shall apply even if the express warranty set forth above fails of its essential purpose.

Disclaimer of Liabilities—Limitation of Liability. IF YOU ACQUIRED THE SOFTWARE IN THE UNITED STATES, LATIN AMERICA, CANADA, JAPAN OR THE CARIBBEAN, NOTWITHSTANDING ANYTHING ELSE IN THE AGREEMENT TO THE CONTRARY, ALL LIABILITY OF RAJANT, ITS AFFILIATES, OFFICERS, DIRECTORS, EMPLOYEES, AGENTS, SUPPLIERS AND LICENSORS COLLECTIVELY, TO CUSTOMER, WHETHER IN CONTRACT, TORT (INCLUDING NEGLIGENCE), BREACH OF WARRANTY OR OTHERWISE, SHALL NOT EXCEED THE PRICE PAID BY CUSTOMER TO ANY APPROVED SOURCE FOR THE SOFTWARE THAT GAVE RISE TO THE CLAIM OR IF THE SOFTWARE IS PART OF ANOTHER PRODUCT, THE PRICE PAID FOR SUCH OTHER PRODUCT. THIS

LIMITATION OF LIABILITY FOR SOFTWARE IS CUMULATIVE AND NOT PER INCIDENT (I.E. THE EXISTENCE OF TWO OR MORE CLAIMS WILL NOT ENLARGE THIS LIMIT).

IF YOU ACQUIRED THE SOFTWARE IN EUROPE, THE MIDDLE EAST, AFRICA, ASIA OR OCEANIA, NOTWITHSTANDING ANYTHING ELSE IN THE AGREEMENT TO THE CONTRARY, ALL LIABILITY OF RAJANT, ITS AFFILIATES, OFFICERS, DIRECTORS, EMPLOYEES, AGENTS, SUPPLIERS AND LICENSORS COLLECTIVELY, TO CUSTOMER, WHETHER IN CONTRACT, TORT (INCLUDING NEGLIGENCE), BREACH OF WARRANTY OR OTHERWISE, SHALL NOT EXCEED THE PRICE PAID BY CUSTOMER TO RAJANT FOR THE SOFTWARE THAT GAVE RISE TO THE CLAIM OR IF THE SOFTWARE IS PART OF ANOTHER PRODUCT, THE PRICE PAID FOR SUCH OTHER PRODUCT. THIS LIMITATION OF LIABILITY FOR SOFTWARE IS CUMULATIVE AND NOT PER INCIDENT (I.E. THE EXISTENCE OF TWO OR MORE CLAIMS WILL NOT ENLARGE THIS LIMIT). NOTHING IN THE AGREEMENT SHALL LIMIT (I) THE LIABILITY OF RAJANT, ITS AFFILIATES, OFFICERS, DIRECTORS, EMPLOYEES, AGENTS, SUPPLIERS AND LICENSORS TO CUSTOMER FOR PERSONAL INJURY OR DEATH CAUSED BY THEIR NEGLIGENCE, (II) RAJANT's LIABILITY FOR FRAUDULENT MISREPRESENTATION, OR (III) ANY LIABILITY OF RAJANT WHICH CANNOT BE EXCLUDED UNDER APPLICABLE LAW.

Disclaimer of Liabilities—Waiver of Consequential Damages and Other Losses. IF YOU ACQUIRED THE SOFTWARE IN THE UNITED STATES, LATIN AMERICA, THE CARIBBEAN OR CANADA, REGARDLESS OF WHETHER ANY REMEDY SET FORTH HEREIN FAILS OF ITS ESSENTIAL PURPOSE OR OTHERWISE, IN NO EVENT WILL RAJANT OR ITS SUPPLIERS BE LIABLE FOR ANY LOST REVENUE, PROFIT, OR LOST OR DAMAGED DATA, BUSINESS INTERRUPTION, LOSS OF CAPITAL, OR FOR SPECIAL, INDIRECT, CONSEQUENTIAL, INCIDENTAL, OR PUNITIVE DAMAGES HOWEVER CAUSED AND REGARDLESS OF THE THEORY OF LIABILITY OR WHETHER ARISING OUT OF THE USE OF OR INABILITY TO USE SOFTWARE OR OTHERWISE AND EVEN IF RAJANT OR ITS SUPPLIERS OR LICENSORS HAVE BEEN ADVISED OF THE POSSIBILITY OF SUCH DAMAGES. BECAUSE SOME STATES OR JURISDICTIONS DO NOT ALLOW LIMITATION OR EXCLUSION OF CONSEQUENTIAL OR INCIDENTAL DAMAGES, THE ABOVE LIMITATION MAY NOT APPLY TO YOU.

IF YOU ACQUIRED THE SOFTWARE IN JAPAN, EXCEPT FOR LIABILITY ARISING OUT OF OR IN CONNECTION WITH DEATH OR PERSONAL INJURY, FRAUDULENT MISREPRESENTATION, AND REGARDLESS OF WHETHER ANY REMEDY SET FORTH HEREIN FAILS OF ITS ESSENTIAL PURPOSE OR OTHERWISE, IN NO EVENT WILL RAJANT, ITS AFFILIATES, OFFICERS, DIRECTORS, EMPLOYEES, AGENTS, SUPPLIERS AND LICENSORS BE LIABLE FOR ANY LOST REVENUE, PROFIT, OR LOST OR DAMAGED DATA, BUSINESS INTERRUPTION, LOSS OF CAPITAL, OR FOR SPECIAL, INDIRECT, CONSEQUENTIAL, INCIDENTAL, OR PUNITIVE DAMAGES HOWEVER CAUSED AND REGARDLESS OF THE THEORY OF LIABILITY OR WHETHER ARISING OUT OF THE USE OF OR INABILITY TO USE SOFTWARE OR OTHERWISE AND EVEN IF RAJANT OR ANY APPROVED SOURCE OR THEIR SUPPLIERS OR LICENSORS HAVE BEEN ADVISED OF THE POSSIBILITY OF SUCH DAMAGES.

IF YOU ACQUIRED THE SOFTWARE IN EUROPE, THE MIDDLE EAST, AFRICA, ASIA OR OCEANIA, IN NO EVENT WILL RAJANT, ITS AFFILIATES, OFFICERS, DIRECTORS, EMPLOYEES, AGENTS, SUPPLIERS AND LICENSORS, BE LIABLE FOR ANY LOST REVENUE, LOST PROFIT, OR LOST OR DAMAGED DATA, BUSINESS INTERRUPTION, LOSS OF CAPITAL, OR FOR SPECIAL, INDIRECT, CONSEQUENTIAL, INCIDENTAL, OR PUNITIVE DAMAGES, HOWSOEVER ARISING, INCLUDING, WITHOUT LIMITATION, IN CONTRACT, TORT (INCLUDING NEGLIGENCE) OR WHETHER ARISING OUT OF THE USE OF OR INABILITY TO USE THE SOFTWARE, EVEN IF, IN EACH CASE, RAJANT, ITS AFFILIATES, OFFICERS, DIRECTORS, EMPLOYEES, AGENTS, SUPPLIERS AND LICENSORS, HAVE BEEN ADVISED OF THE POSSIBILITY OF SUCH DAMAGES. BECAUSE SOME STATES OR JURISDICTIONS DO NOT ALLOW LIMITATION OR EXCLUSION OF CONSEQUENTIAL OR INCIDENTAL DAMAGES, THE ABOVE LIMITATION MAY NOT FULLY APPLY TO YOU. THE FOREGOING EXCLUSION SHALL NOT APPLY TO ANY LIABILITY ARISING OUT OF OR IN CONNECTION WITH: (I) DEATH OR PERSONAL INJURY, (II) FRAUDULENT MISREPRESENTATION, OR (III) RAJANT's LIABILITY IN CONNECTION WITH ANY TERMS THAT CANNOT BE EXCLUDED UNDER APPLICABLE LAW.

Customer acknowledges and agrees that RAJANT has set its prices and entered into the Agreement in reliance upon the disclaimers of warranty and the limitations of liability set forth herein, that the same reflect an allocation of risk between the parties (including the risk that a contract remedy may fail of its essential purpose and cause consequential loss), and that the same form an essential basis of the bargain between the parties.

Controlling Law, Jurisdiction. Customer agrees that all sales occurred, and contracts entered into at Malvern, Pennsylvania, notwithstanding the location of any affiliate or Customer's location or principal place of business. All contracts for the license of software and/or purchase of hardware are deemed to have occurred at Malvern, Pennsylvania and the Agreement and warranties ("Warranties") are controlled by and construed under the laws of the Commonwealth of Pennsylvania, United States of America, notwithstanding any conflicts of law provisions; and the state and federal courts of Pennsylvania shall have exclusive jurisdiction over any claim arising under the Agreement or Warranties.

The parties specifically disclaim the application of the UN Convention on Contracts for the International Sale of Goods. Notwithstanding the foregoing, either party may seek interim injunctive relief in any court of appropriate jurisdiction with respect to any alleged breach of such party's intellectual property or proprietary rights. If any portion hereof is found to be void or unenforceable, the remaining provisions of the Agreement and Warranties shall remain in full force and effect. Except as expressly provided herein, the Agreement constitutes the entire agreement between the parties with respect to the license of the Software and Documentation and supersedes any conflicting or additional terms contained in any Purchase Order or elsewhere, all of which terms are excluded. The Agreement has been written in the English language, and the parties agree that the English version will govern.

Product warranty terms and other information applicable to RAJANT products are available at the following URL: www.rajant.com

RAJANT and the RAJANT Logo are trademarks of RAJANT Corporation and/or its affiliates in the U.S. and other countries. Third party trademarks mentioned are the property of their respective owners. The use of the word partner does not imply a partnership relationship between RAJANT and any other company.

© Copyright 2016-2018 Rajant Corporation. All rights reserved.

Appendix I: GNU General Public License

Version 2, June 1991

Copyright © 1989, 1991 Free Software Foundation, Inc. 59 Temple Place, Suite 330, Boston, MA 02111-1307 USA

Everyone is permitted to copy and distribute verbatim copies of this license document, but changing it is not allowed.

PREAMBLE

The licenses for most software are designed to take away your freedom to share and change it. By contrast, the GNU General Public License is intended to guarantee your freedom to share and change free software–to make sure the software is free for all its users. This General Public License applies to most of the Free Software Foundation's software and to any other program whose authors commit to using it. (Some other Free Software Foundation software is covered by the GNU Library General Public License instead.) You can apply it to your programs, too.

When we speak of free software, we are referring to freedom, not price. Our General Public Licenses are designed to make sure that you have the freedom to distribute copies of free software (and charge for this service if you wish), that you receive source code or can get it if you want it, that you can change the software or use pieces of it in new free programs; and that you know you can do these things.

To protect your rights, we need to make restrictions that forbid anyone to deny you these rights or to ask you to surrender the rights. These restrictions translate to certain responsibilities for you if you distribute copies of the software, or if you modify it.

For example, if you distribute copies of such a program, whether gratis or for a fee, you must give the recipients all the rights that you have. You must make sure that they, too, receive or can get the source code. And you must show them these terms so they know their rights.

We protect your rights with two steps: (1) copyright the software, and (2) offer you this license which gives you legal permission to copy, distribute and/or modify the software.

Also, for each author's protection and ours, we want to make certain that everyone understands that there is no warranty for this free software. If the software is modified by someone else and passed on, we want its recipients to know that what they have is not the original, so that any problems introduced by others will not reflect on the original authors' reputations.

Finally, any free program is threatened constantly by software patents. We wish to avoid the danger that redistributors of a free program will individually obtain patent licenses, in effect making the program proprietary. To prevent this, we have made it clear that any patent must be licensed for everyone's free use or not licensed at all.

The precise terms and conditions for copying, distribution and modification follow.

TERMS AND CONDITIONS FOR COPYING, DISTRIBUTION AND MODIFICATION

1. This License applies to any program or other work which contains a notice placed by the copyright holder saying it may be distributed under the terms of this General Public License. The "Program", below, refers to any such program or work, and a "work based on the Program" means either the Program or any derivative work under copyright law: that is to say, a work containing the Program or a portion of it, either verbatim or with modifications and/or translated into another language. (Hereinafter, translation is included without limitation in the term "modification".) Each licensee is addressed as "you".

Activities other than copying, distribution and modification are not covered by this License; they are outside its scope. The act of running the Program is not restricted, and the output from the Program is cov-

ered only if its contents constitute a work based on the Program (independent of having been made by running the Program). Whether that is true depends on what the Program does.

1. You may copy and distribute verbatim copies of the Program's source code as you receive it, in any medium, provided that you conspicuously and appropriately publish on each copy an appropriate copyright notice and disclaimer of warranty; keep intact all the notices that refer to this License and to the absence of any warranty; and give any other recipients of the Program a copy of this License along with the Program.

You may charge a fee for the physical act of transferring a copy, and you may at your option offer warranty protection in exchange for a fee.

1. You may modify your copy or copies of the Program or any portion of it, thus forming a work based on the Program, and copy and distribute such modifications or work under the terms of Section 1 above, provided that you also meet all of these conditions:

a) You must cause the modified files to carry prominent notices stating that you changed the files and the date of any change.

b) You must cause any work that you distribute or publish, that in whole or in part contains or is derived from the Program or any part thereof, to be licensed as a whole at no charge to all third parties under the terms of this License.

c) If the modified program normally reads commands interactively when run, you must cause it, when started running for such interactive use in the most ordinary way, to print or display an announcement including an appropriate copyright notice and a notice that there is no warranty (or else, saying that you provide a warranty) and that users may redistribute the program under these conditions, and telling the user how to view a copy of this License. (Exception: if the Program itself is interactive but does not normally print such an announcement, your work based on the Program is not required to print an announcement.)

These requirements apply to the modified work as a whole. If identifiable sections of that work are not derived from the Program, and can be reasonably considered independent and separate works in themselves, then this License, and its terms, do not apply to those sections when you distribute them as separate works. But when you distribute the same sections as part of a whole which is a work based on the Program, the distribution of the whole must be on the terms of this License, whose permissions for other licensees extend to the entire whole, and thus to each and every part regardless of who wrote it.

Thus, it is not the intent of this section to claim rights or contest your rights to work written entirely by you; rather, the intent is to exercise the right to control the distribution of derivative or collective works based on the Program.

In addition, mere aggregation of another work not based on the Program with the Program (or with a work based on the Program) on a volume of a storage or distribution medium does not bring the other work under the scope of this License.

1. You may copy and distribute the Program (or a work based on it, under Section 2) in object code or executable form under the terms of Sections 1 and 2 above provided that you also do one of the following:

a) Accompany it with the complete corresponding machine-readable source code, which must be distributed under the terms of Sections 1 and 2 above on a medium customarily used for software interchange; or,

b) Accompany it with a written offer, valid for at least three years, to give any third party, for a charge no more than your cost of physically performing source distribution, a complete machine-readable copy of the corresponding source code, to be distributed under the terms of Sections 1 and 2 above on a medium customarily used for software interchange; or,

c) Accompany it with the information you received as to the offer to distribute corresponding source code. (This alternative is allowed only for noncommercial distribution and only if you received the program in object code or executable form with such an offer, in accord with Subsection b above.)

The source code for a work means the preferred form of the work for making modifications to it. For an executable work, complete source code means all the source code for all modules it contains, plus any associated interface definition files, plus the scripts used to control compilation and installation of the executable. However, as a special exception, the source code distributed need not include anything that is normally distributed (in either source or binary form) with the major components (compiler, kernel, and so on) of the operating system on which the executable runs, unless that component itself accompanies the executable.

If distribution of executable or object code is made by offering access to copy from a designated place, then offering equivalent access to copy the source code from the same place counts as distribution of the source code, even though third parties are not compelled to copy the source along with the object code.

1. You may not copy, modify, sublicense, or distribute the Program except as expressly provided under this License. Any attempt otherwise to copy, modify, sublicense or distribute the Program is void, and will automatically terminate your rights under this License. However, parties who have received copies, or rights, from you under this License will not have their licenses terminated so long as such parties remain in full compliance.
2. You are not required to accept this License, since you have not signed it. However, nothing else grants you permission to modify or distribute the Program or its derivative works. These actions are prohibited by law if you do not accept this License. Therefore, by modifying or distributing the Program (or any work based on the Program), you indicate your acceptance of this License to do so, and all its terms and conditions for copying, distributing or modifying the Program or works based on it.
3. Each time you redistribute the Program (or any work based on the Program), the recipient automatically receives a license from the original licensor to copy, distribute or modify the Program subject to these terms and conditions. You may not impose any further restrictions on the recipients' exercise of the rights granted herein. You are not responsible for enforcing compliance by third parties to this License.
4. If, as a consequence of a court judgment or allegation of patent infringement or for any other reason (not limited to patent issues), conditions are imposed on you (whether by court order, agreement or otherwise) that contradict the conditions of this License, they do not excuse you from the conditions of this License. If you cannot distribute so as to satisfy simultaneously your obligations under this License and any other pertinent obligations, then as a consequence you may not distribute the Program at all. For example, if a patent license would not permit royalty-free redistribution of the Program by all those who receive copies directly or indirectly through you, then the only way you could satisfy both it and this License would be to refrain entirely from distribution of the Program.

If any portion of this section is held invalid or unenforceable under any particular circumstance, the balance of the section is intended to apply and the section as a whole is intended to apply in other circumstances.

It is not the purpose of this section to induce you to infringe any patents or other property right claims or to contest validity of any such claims; this section has the sole purpose of protecting the integrity of the free software distribution system, which is implemented by public license practices. Many people have made generous contributions to the wide range of software distributed through that system in reliance on consistent application of that system; it is up to the author/donor to decide if he or she is willing to distribute software through any other system and a licensee cannot impose that choice.

This section is intended to make thoroughly clear what is believed to be a consequence of the rest of this License.

1. If the distribution and/or use of the Program is restricted in certain countries either by patents or by copyrighted interfaces, the original copyright holder who places the Program under this License may add an explicit geographical distribution limitation excluding those countries, so that distribu-

tion is permitted only in or among countries not thus excluded. In such case, this License incorporates the limitation as if written in the body of this License.

2. The Free Software Foundation may publish revised and/or new versions of the General Public License from time to time. Such new versions will be similar in spirit to the present version, but may differ in detail to address new problems or concerns.

Each version is given a distinguishing version number. If the Program specifies a version number of this License which applies to it and “any later version”, you have the option of following the terms and conditions either of that version or of any later version published by the FreeSoftware Foundation. If the Program does not specify a version number of this License, you may choose any version ever published by the Free Software Foundation.

1. If you wish to incorporate parts of the Program into other free programs whose distribution conditions are different, write to the author to ask for permission. For software which is copyrighted by the Free Software Foundation, write to the Free Software Foundation; we sometimes make exceptions for this. Our decision will be guided by the two goals of preserving the free status of all derivatives of our free software and of promoting the sharing and reuse of software generally.

NO WARRANTY

1. BECAUSE THE PROGRAM IS LICENSED FREE OF CHARGE, THERE IS NO WARRANTY FOR THE PROGRAM, TO THE EXTENT PERMITTED BY APPLICABLE LAW. EXCEPT WHEN OTHERWISE STATED IN WRITING THE COPYRIGHT HOLDERS AND/OR OTHER PARTIES PROVIDE THE PROGRAM “AS IS” WITHOUT WARRANTY OF ANY KIND, EITHER EXPRESSED OR IMPLIED, INCLUDING, BUT NOT LIMITED TO, THE IMPLIED WARRANTIES OF MERCHANTABILITY AND FITNESS FOR A PARTICULAR PURPOSE. THE ENTIRE RISK AS TO THE QUALITY AND PERFORMANCE OF THE PROGRAM IS WITH YOU. SHOULD THE PROGRAM PROVE DEFECTIVE, YOU ASSUME THE COST OF ALL NECESSARY SERVICING, REPAIR OR CORRECTION.
2. IN NO EVENT UNLESS REQUIRED BY APPLICABLE LAW OR AGREED TO IN WRITING WILL ANY COPYRIGHT HOLDER, OR ANY OTHER PARTY WHO MAY MODIFY AND/OR REDISTRIBUTE THE PROGRAM AS PERMITTED ABOVE, BE LIABLE TO YOU FOR DAMAGES, INCLUDING ANY GENERAL, SPECIAL, INCIDENTAL OR CONSEQUENTIAL DAMAGES ARISING OUT OF THE USE OR INABILITY TO USE THE PROGRAM (INCLUDING BUT NOT LIMITED TO LOSS OF DATA OR DATA BEING RENDERED INACCURATE OR LOSSES SUSTAINED BY YOU OR THIRD PARTIES OR A FAILURE OF THE PROGRAM TO OPERATE WITH ANY OTHER PROGRAMS), EVEN IF SUCH HOLDER OR OTHER PARTY HAS BEEN ADVISED OF THE POSSIBILITY OF SUCH DAMAGES.

END OF TERMS AND CONDITIONS

HOW TO APPLY THESE TERMS TO YOUR NEW PROGRAMS

If you develop a new program, and you want it to be of the greatest possible use to the public, the best way to achieve this is to make it free software which everyone can redistribute and change under these terms.

To do so, attach the following notices to the program. It is safest to attach them to the start of each source file to most effectively convey the exclusion of warranty; and each file should have at least the “copyright” line and a pointer to where the full notice is found.

one line to give the program’s name and an idea of what it does. Copyright © yyyy name of author

This program is free software; you can redistribute it and/or modify it under the terms of the GNU General Public License as published by the Free Software Foundation; either version 2 of the License, or (at your option) any later version.

This program is distributed in the hope that it will be useful, but WITHOUT ANY WARRANTY; without even the implied warranty of MERCHANTABILITY or FITNESS FOR A PARTICULAR PURPOSE. See the GNU General Public License for more details.

You should have received a copy of the GNU General Public License along with this program; if not, write to the Free Software Foundation, Inc., 51 Franklin Street, Fifth Floor, Boston, MA 02110-1301, USA.

Also add information on how to contact you by electronic and paper mail.

If the program is interactive, make it output a short notice like this when it starts in an interactive mode:

Gnomovision version 69, Copyright © year name of author Gnomovision comes with ABSOLUTELY NO WARRANTY; for details type ‘show w’. This is free software, and you are welcome to redistribute it under certain conditions; type ‘show c’ for details.

The hypothetical commands ‘show w’ and ‘show c’ should show the appropriate parts of the General Public License. Of course, the commands you use may be called something other than ‘show w’ and ‘show c’; they could even be mouse-clicks or menu items–whatever suits your program.

You should also get your employer (if you work as a programmer) or your school, if any, to sign a “copyright disclaimer” for the program, if necessary. Here is a sample; alter the names:

Yoyodyne, Inc., hereby disclaims all copyright interest in the program ‘Gnomovision’ (which makes passes at compilers) written by James Hacker.

signature of Ty Coon, 1 April 1989 Ty Coon, President of Vice

This General Public License does not permit incorporating your program into proprietary programs. If your program is a subroutine library, you may consider it more useful to permit linking proprietary applications with the library. If this is what you want to do, use the GNU Lesser General Public License instead of this License.