# RF Test Report

| | | |
|---|---|---|
| Applicant | : | Rajant Corporation |
| Product Type | : | Radio Module |
| Trade Name | : | VIZMONET |
| Model Number | : | RJ-1705 |
| Applicable Standard | : | FCC 47 CFR PART 90Y<br>ANSI C63.26 2015 |
| Received Date | : | Sep. 24, 2021 |
| Test Period | : | Sep. 28, 2021 ~ Feb. 07, 2022 |
| Issued Date | : | May 06, 2022 |

**Issued by**

A Test Lab Techno Corp.
No. 140-1, Changan Street, Bade District,
Taoyuan City 33465, Taiwan (R.O.C.)
Tel：+886-3-2710188 / Fax：+886-3-2710190

Taiwan Accreditation Foundation accreditation number: 1330
Frequency Range : 9 kHz to 40 GHz
Test Firm MRA designation number: TW0010

***Note:***

***Note:***

1.The test results are valid only for samples provided by customers and under the test conditions described in this report.
2.This report shall not be reproduced except in full, without the written approval of A Test Lab Technology Corporation.
3.The relevant information is provided by customers in this test report. According to the correctness, appropriateness or completeness of the information provided by the customer, if there is any doubt or error in the information which affects the validity of the test results, the laboratory does not take the responsibility.

# Revision History

| Rev. | Issued Date | Revisions | Revised By |
|---|---|---|---|
| 00 | May 06, 2022 | Initial Issue | Nina Lin |
| | | | |
| | | | |
| | | | |

# Verification of Compliance

| | | |
|---|---|---|
| Applicant | : | Rajant Corporation |
| Product Type | : | Radio Module |
| Trade Name | : | VIZMONET |
| Model Number | : | RJ-1705 |
| FCC ID | : | VJA-RJ1705 |
| Applicable Standard | : | FCC 47 CFR PART 90Y<br>ANSI C63.26 2015 |
| Test Result | : | Complied |
| Performing Lab. | : | A Test Lab Techno Corp.<br>No. 140-1, Changan Street, Bade District,<br>Taoyuan City 33465, Taiwan (R.O.C.)<br>Tel：+886-3-2710188 / Fax：+886-3-2710190<br>Taiwan Accreditation Foundation accreditation number: 1330<br>http://www.atl-lab.com.tw/e-index.htm |

A Test Lab Techno Corp. tested the above equipment in accordance with the requirements set forth in the above standards. All indications of Pass/Fail in this report are opinions expressed by A Test Lab Techno Corp. based on interpretations and/or observations of test results. The test results show that the equipment tested is capable of demonstrating compliance with the requirements as documented in this report.

Approved By : Kai Yu Yang

(Kai Yu Yang)

# TABLE OF CONTENTS

**1 General Information ..... 5**
1.1. EUT Description ..... 5
1.2. Mode of Operation ..... 6
1.3. EUT Test Step ..... 14
1.4. Configuration of Test System Details ..... 14
1.5. Test Instruments ..... 15
1.6. Test Site Environment ..... 18
1.7. Measurement Uncertainty ..... 18
1.8. Summary of Test Result ..... 19
**2 Measurement Procedure ..... 20**
2.1. Conducted Output Power Test ..... 20
2.2. Power Spectral Density Test ..... 22
2.3. Emission Bandwidth & Occupied Bandwidth Test ..... 24
2.4. Peak Excursion Test ..... 25
2.5. Channel Mask Test ..... 26
2.6. Conducted Spurious Emission Test ..... 28
2.7. Field Strength of Spurious Radiation Test ..... 29
2.8. Frequency Stability (Temperature & Voltage Variation) Test ..... 32
**3 Test Results ..... 33**
3.1. Conducted Output Power ..... 33
3.2. Power Spectral Density ..... 47
3.3. Emission Bandwidth & Occupied Bandwidth ..... 67
3.4. Peak Excursion ..... 87
3.5. Channel Mask ..... 107
3.6. Conducted Spurious Emission ..... 125
3.7. Field Strength of Spurious Radiation ..... 143
3.8. Frequency Stability for Temperature & Voltage ..... 287

**Appendix A. Test Setup Photographs**

# 1 General Information

## 1.1. EUT Description

| | | | | |
|---|---|---|---|---|
| Applicant | Rajant Corporation<br>200 Chesterfield Parkway, Malvern, Pennsylvania 19355-3258, United States<br>www.rajant.com | | | |
| Product Type | Radio Module | | | |
| Trade Name | VIZMONET | | | |
| Model Number | RJ-1705 | | | |
| FCC ID | VJA-RJ1705 | | | |
| Operate frequency | MHz | Frequency (MHz) | Number of channels | Modulation |
| | 5 | 4942.5 ~ 4987.5 | 10 | BPSK/QPSK/ 16QAM/64QAM |
| | 10 | 4945 ~ 4985 | 9 | |
| | 20 | 4950 ~ 4980 | 7 | |
| Antenna information | Antenna | Model | Type | Max. Gain (dBi) |
| | ANT-0/ANT-1 | KMA-4800-6-NM | External type(Omni-directional) | 6 |
| Operate Temp. Range | -40 ~ +85 ℃ | | | |
| EUT Power Rating | DC 3.3 V | | | |

| Test Mode | Max. RF Output Power (dBm) | 26 dB RF Bandwidth (MHz) | 99 % Occupied Bandwidth (MHz) |
|---|---|---|---|
| Mode 1 | 24.25 | 9.431 | 4.527 |
| Mode 2 | 23.37 | 19.110 | 9.428 |
| Mode 3 | 23.37 | 35.830 | 18.891 |
| Mode 4 | 24.04 | 9.589 | 4.688 |
| Mode 5 | 23.56 | 17.590 | 9.387 |
| Mode 6 | 23.34 | 36.180 | 18.908 |
| Mode 7 | 26.26 | 9.488 | 4.955 |
| Mode 8 | 26.16 | 19.120 | 9.889 |
| Mode 9 | 25.90 | 35.840 | 18.760 |
| Mode 10 | 26.12 | 9.097 | 4.653 |
| Mode 11 | 25.80 | 18.540 | 9.410 |
| Mode 12 | 25.87 | 38.960 | 19.064 |

## 1.2. Mode of Operation

ATL has verified the construction and function in typical operation. All the test modes were carried out with the EUT in normal operation, which was shown in this test report and defined as:

| Test Mode |
|---|
| Mode 1: SISO_5 MHz Continuous TX mode (Legacy) |
| Mode 2: SISO_10 MHz Continuous TX mode (Legacy) |
| Mode 3: SISO_20 MHz Continuous TX mode (Legacy) |
| Mode 4: SISO_5 MHz Continuous TX mode |
| Mode 5: SISO_10 MHz Continuous TX mode |
| Mode 6: SISO_20 MHz Continuous TX mode |
| Mode 7: MIMO_5 MHz Continuous TX mode (Legacy) |
| Mode 8: MIMO_10 MHz Continuous TX mode (Legacy) |
| Mode 9: MIMO_20 MHz Continuous TX mode (Legacy) |
| Mode 10: MIMO_5 MHz Continuous TX mode |
| Mode 11: MIMO_10 MHz Continuous TX mode |
| Mode 12: MIMO_20 MHz Continuous TX mode |

Note 1: Regards to the frequency band operation: the lowest, middle and highest frequency of channel were selected to perform the test, then shown on this report.
Note 2: ANT-0 is the worst case in Mode 1~6.

By preliminary testing and verifying three axis (X, Y and Z) position of EUT transmitted status, it was found that “X axis” position was the worst, then the final test was executed the worst condition and test data were recorded in this report.

| Test Mode | ANT-0 | ANT-1 | ANT-0+1 |
|---|---|---|---|
| Mode 1 | V | V | --- |
| Mode 2 | V | V | --- |
| Mode 3 | V | V | --- |
| Mode 4 | V | V | --- |
| Mode 5 | V | V | --- |
| Mode 6 | V | V | --- |
| Mode 7 | V | V | V |
| Mode 8 | V | V | V |
| Mode 9 | V | V | V |
| Mode 10 | V | V | V |
| Mode 11 | V | V | V |
| Mode 12 | V | V | V |

| Test Mode | Antenna Delivery | Data Rate (Mbps) | Test Frequency (MHz) |
|---|---|---|---|
| Mode 1 | 1TX (Diversity) | 6 | 4942.5, 4967.5, 4987.5 |
| Mode 2 | 1TX (Diversity) | 6 | 4945, 4965, 4985 |
| Mode 3 | 1TX (Diversity) | 6 | 4950, 4965, 4980 |
| Mode 4 | 1TX (Diversity) | MCS0 | 4942.5, 4967.5, 4987.5 |
| Mode 5 | 1TX (Diversity) | MCS0 | 4945, 4965, 4985 |
| Mode 6 | 1TX (Diversity) | MCS0 | 4950, 4965, 4980 |
| Mode 7 | 2TX (MIMO) | 6 | 4942.5, 4967.5, 4987.5 |
| Mode 8 | 2TX (MIMO) | 6 | 4945, 4965, 4985 |
| Mode 9 | 2TX (MIMO) | 6 | 4950, 4965, 4980 |
| Mode 10 | 2TX (MIMO) | MCS8 | 4942.5, 4967.5, 4987.5 |
| Mode 11 | 2TX (MIMO) | MCS8 | 4945, 4965, 4985 |
| Mode 12 | 2TX (MIMO) | MCS8 | 4950, 4965, 4980 |

**Duty cycle**

| Test Mode | Frequency (MHz) | on time (ms) | on+off time (ms) | Duty cycle | Duty Factor (dB) | 1/T Minimum VBW (kHz) |
|---|---|---|---|---|---|---|
| Mode 1 | 4942.5 | 6.552 | 6.569 | 0.997 | 0.011 | 0.010 |
| Mode 2 | 4945.0 | 3.280 | 3.288 | 0.998 | 0.011 | 0.010 |
| Mode 3 | 4950.0 | 1.645 | 1.660 | 0.991 | 0.039 | 0.010 |
| Mode 4 | 4942.5 | 6.562 | 6.579 | 0.997 | 0.011 | 0.010 |
| Mode 5 | 4945.0 | 3.280 | 3.290 | 0.997 | 0.013 | 0.010 |
| Mode 6 | 4950.0 | 1.540 | 1.565 | 0.984 | 0.070 | 0.010 |
| Mode 7 | 4942.5 | 6.552 | 6.569 | 0.997 | 0.011 | 0.010 |
| Mode 8 | 4945.0 | 3.280 | 3.288 | 0.998 | 0.011 | 0.010 |
| Mode 9 | 4950.0 | 1.640 | 1.660 | 0.988 | 0.053 | 0.010 |
| Mode 10 | 4942.5 | 6.560 | 6.576 | 0.998 | 0.011 | 0.010 |
| Mode 11 | 4945.0 | 3.280 | 3.290 | 0.997 | 0.013 | 0.010 |
| Mode 12 | 4950.0 | 1.535 | 1.560 | 0.984 | 0.070 | 0.010 |

**Duty Cycle Graphs**

| Mode 1: SISO_5 MHz Continuous TX mode (Legacy) | |
|---|---|
| On+off time | 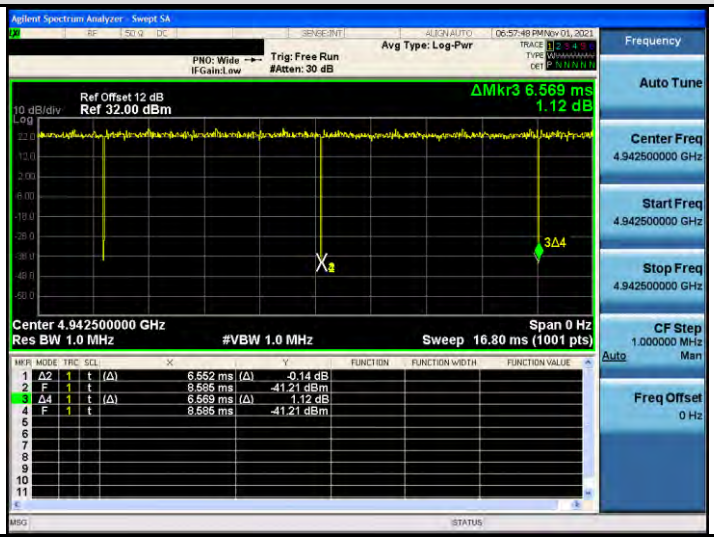 |



| Mode 2: SISO_10 MHz Continuous TX mode (Legacy) | |
|---|---|
| On+off time | 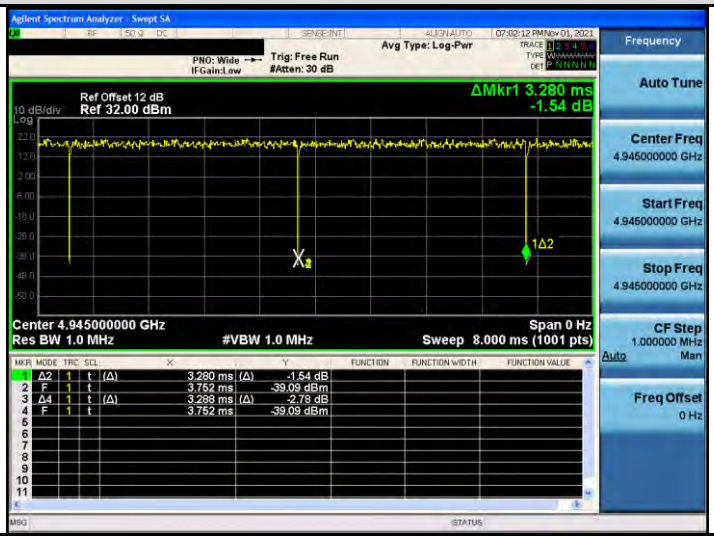 |

| Mode 3: SISO_20 MHz Continuous TX mode (Legacy) | | |
|---|---|---|
| On+off time | | 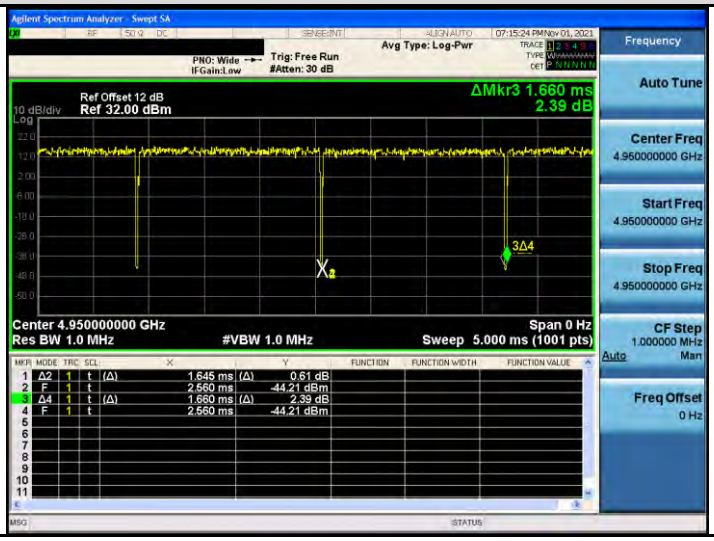 |



| Mode 4: SISO_5 MHz Continuous TX mode | | |
|---|---|---|
| On+off time | | 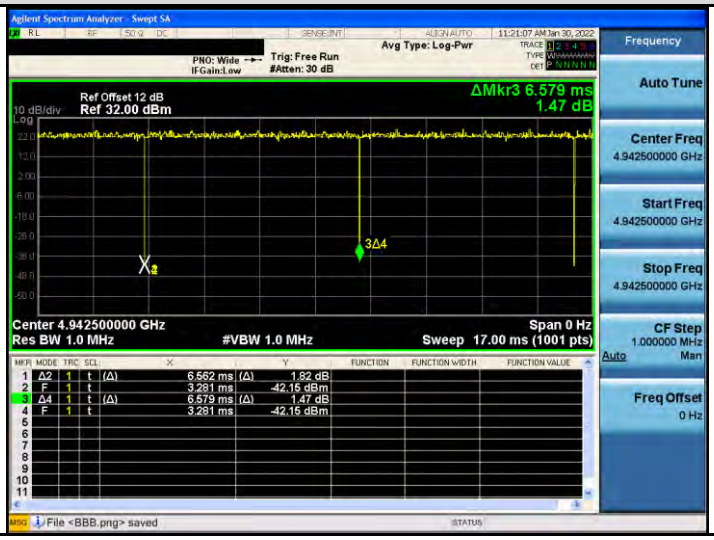 |

| Mode 5: SISO_10 MHz Continuous TX mode | | |
|---|---|---|
| On+off time | | 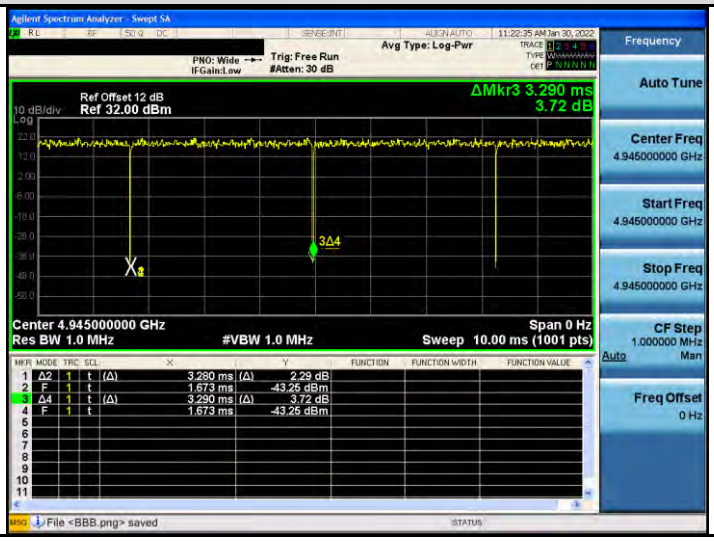 |



| Mode 6: SISO_20 MHz Continuous TX mode | | |
|---|---|---|
| On+off time | | 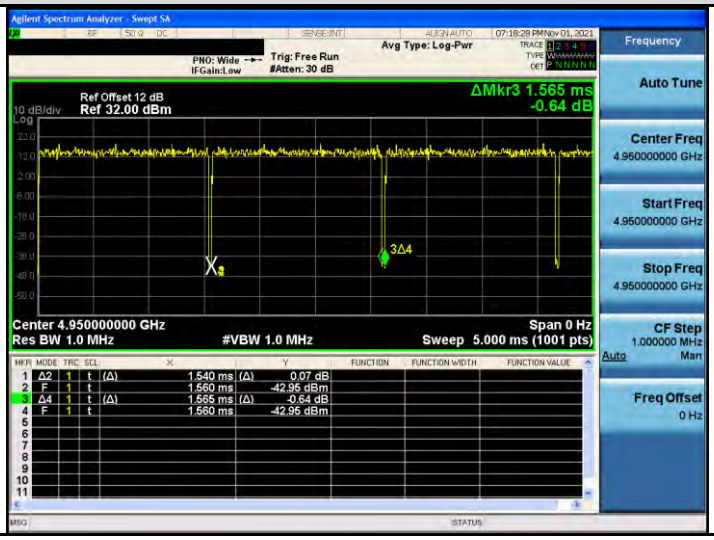 |

| Mode 7: MIMO_5 MHz Continuous TX mode (Legacy) | | |
|---|---|---|
| On+off time | | 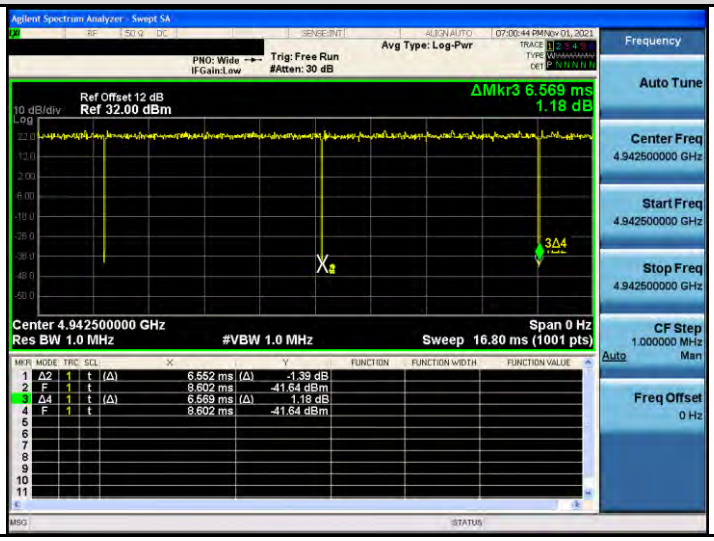 |



| Mode 8: MIMO_10 MHz Continuous TX mode (Legacy) | | |
|---|---|---|
| On+off time | | 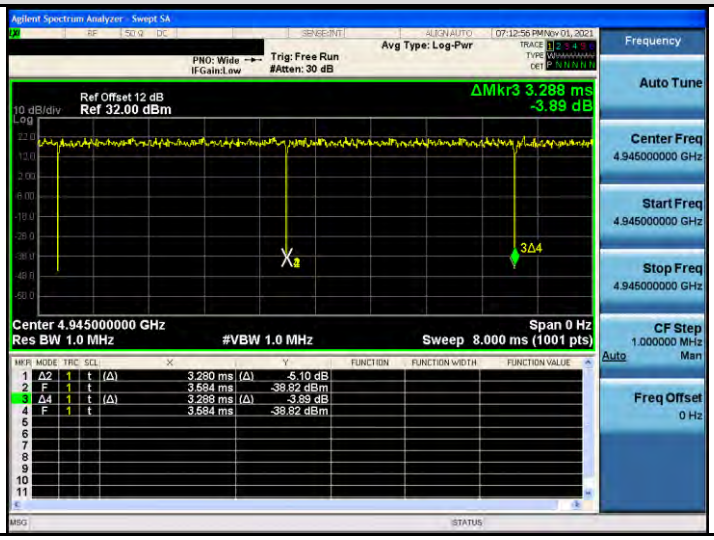 |

| Mode 9: MIMO_20 MHz Continuous TX mode (Legacy) | | |
|---|---|---|
| On+off time | | 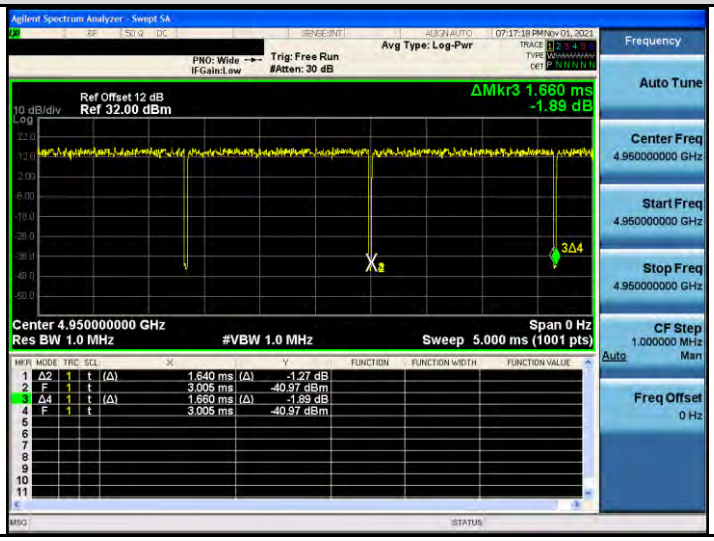 |



| Mode 10: MIMO_5 MHz Continuous TX mode | | |
|---|---|---|
| On+off time | | 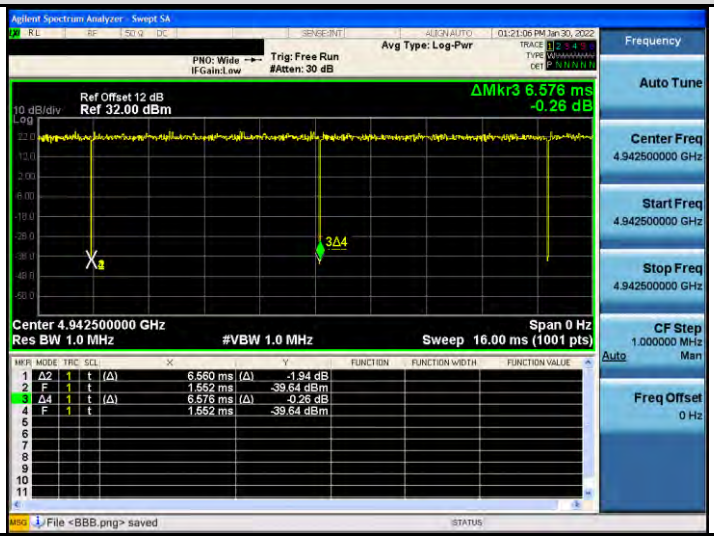 |

| Mode 11: MIMO_10 MHz Continuous TX mode | | |
|---|---|---|
| On+off time | | 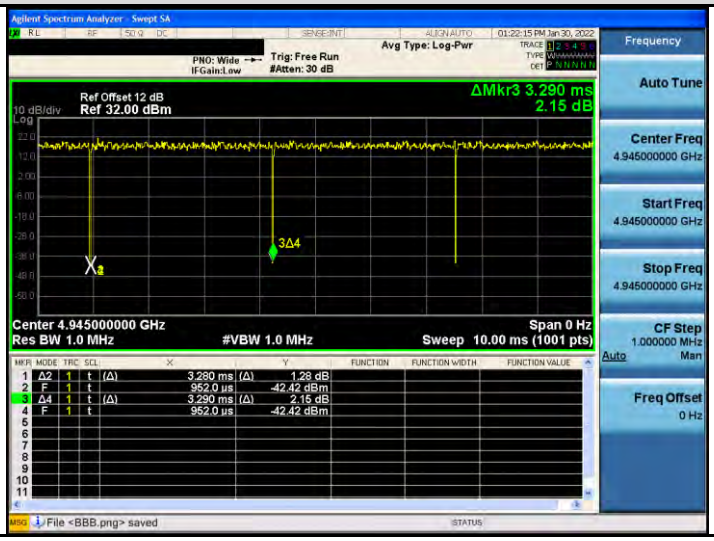 |



| Mode 12: MIMO_20 MHz Continuous TX mode | | |
|---|---|---|
| On+off time | | 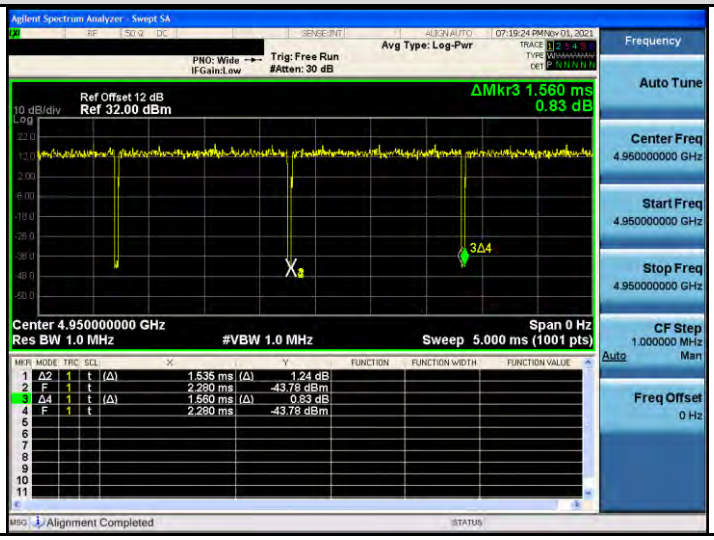 |

## 1.3. EUT Test Step

| | |
|---|---|
| 1 | Setup the EUT shown on “Configuration of Test System Details”. |
| 2. | Turn on the power of all equipment. |
| 3. | Turn on TX function. |
| 4. | EUT run test program. |

## 1.4. Configuration of Test System Details

**Radiation Emission**

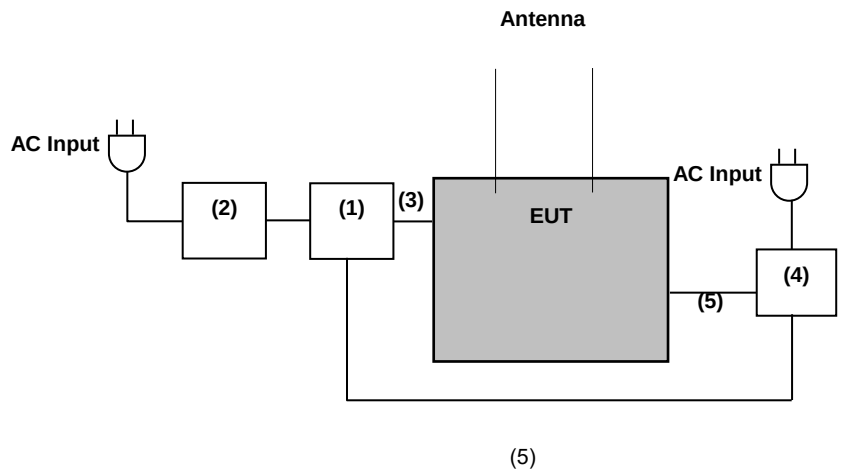


| Product | | Manufacturer | Model Number | Serial Number | Power Cord |
|---|---|---|---|---|---|
| (1) | Notebook | ASUS | P1448U | --- | --- |
| (2) | AC Adapter | ASUS | PA-1650-78 | --- | --- |
| (3) | Fixture | FTDI | TTL-232R-3.3V | --- | --- |
| (4) | PoE | Tycon Systems | TP-POE-24G | --- | --- |
| (5) | LAN Cable | BELDEN | 900000433 | --- | --- |
| (6) | LAN Cable | HUAWEI | UL2464 | --- | --- |

## 1.5. Test Instruments

For Conducted
Test Period: Oct. 20, 2021 ~ Jan. 29, 2022
Testing Engineer: Louis Shen

| Use | Equipment | Manufacturer | Model Number | Serial Number | Cal. Date | Cal. Period |
|---|---|---|---|---|---|---|
| ☐ | Power Sensor | Anritsu | MA2411B | 1126022 | Sep. 01, 2020<br>Sep. 03, 2021 | 1 year |
| ☐ | Power Meter | Anritsu | ML2495A | 1135009 | Sep. 01, 2020<br>Sep. 03, 2021 | 1 year |
| ☒ | Power Sensor | Agilent | N1921A | MY45241957 | Dec. 09, 2020<br>Dec. 06, 2021 | 1 year |
| ☒ | Power Meter | Agilent | N1911A | MY45101619 | Dec. 09, 2020<br>Dec. 06, 2021 | 1 year |
| ☐ | Spectrum Analyzer (10 Hz~26.5 GHz) | Keysight | N9010B | MY59071418 | Mar. 17, 2021 | 1 year |
| ☐ | Spectrum Analyzer (9 kHz~26.5 GHz) | Agilent | N9010A | MY48030518 | Jul. 23, 2021 | 1 year |
| ☐ | Spectrum Analyzer (20 Hz~26.5 GHz) | Agilent | N9020A | US47520902 | Sep. 09, 2021 | 1 year |
| ☒ | Spectrum Analyzer (3 Hz~50 GHz) | Agilent | N9030A | MY53120541 | Jan. 08, 2021<br>Jan. 05, 2022 | 1 year |
| ☐ | Temperature & Humidity Chamber | TAICHY | MHU-225LA | 980729 | Mar. 30, 2021 | 1 year |
| ☐ | Signal Generator | Keysight | N5182B | MY53052569 | Apr. 20, 2021 | 1 year |
| ☐ | Signal Generator | Keysight | N5182BX07 | MY59360221 | Apr. 20, 2021 | 1 year |
| ☐ | Bluetooth Tester | R&S | CBT | 100350 | Mar. 17, 2021 | 2 years |
| ☐ | Wireless Connectivity Tester | R&S | CMW270 | 102208 | Jun. 02, 2021 | 1 year |
| ☐ | Power Supply | KEITHLEY | 2303 | 4045290 | Feb. 01, 2021<br>Jan. 19, 2022 | 1 year |
| ☐ | RF Communication Test Set | HP | 8920A | 3344A03297 | Aug. 10, 2021 | 1 year |

Note: N.C.R. = No Calibration Request.

For Radiated Emissions
Test Period: Sep. 28, 2021 ~ Feb. 07, 2022
Testing Engineer: Hung.Chou, Eva Lee

| Radiation test sites | | Semi Anechoic Room | | | | |
|---|---|---|---|---|---|---|
| Use | Equipment | Manufacturer | Model Number | Serial Number | Cal. Date | Cal. Period |
| ☐ | Spectrum Analyzer (10 Hz~44 GHz) | Keysight | N9010A | MY52221312 | Jan. 15, 2021<br>Jan. 13, 2022 | 1 year |
| ☐ | Spectrum Analyzer (3 Hz~50 GHz) | Agilent | N9030A | MY53120541 | Jan. 08, 2022<br>Jan. 05, 2022 | 1 year |
| ☒ | Spectrum Analyzer (2 Hz~50 GHz) | Keysight | N9030B | MY57143537 | Apr. 19, 2021 | 1 year |
| ☒ | Amplifier (100 kHz~1.3 GHz) | Agilent | 8447D | 2944A11119 | Jan. 19, 2021<br>Jan. 14, 2022 | 1 year |
| ☐ | Amplifier (100 kHz~1.3 GHz) | Agilent | 8447D | 2944A10961 | Jul. 06, 2021 | 1 year |
| ☐ | Broadband Amplifier (100 kHz~1 GHz) | Titan | T0910E00014330A1F | 001 | Jul. 23, 2021 | 1 year |
| ☐ | Amplifier (1 GHz~26.5 GHz) | Agilent | 8449B | 3008A02237 | Oct. 21, 2020<br>Oct. 21, 2021 | 1 year |
| ☒ | Broadband Amplifier (1 GHz~26.5 GHz) | Titan | T0912E01263025A1F | 002 | Jul. 26, 2021 | 1 year |
| ☒ | Preamplifier (26.5 GHz~40 GHz) | EMCI | EMC2654045 | 980028 | Aug. 19, 2021 | 1 year |
| ☐ | Loop Antenna (9 kHz~30 MHz) | COM-POWER CORPORATION | AL-130 | 121014 | Apr. 07, 2021 | 1 year |
| ☒ | Trilog Broadband Antenna (30 kHz~1 GHz) | Schwarzbeck Mess-Elektronik | VULB9168 | 01146 | Jul. 19, 2021 | 1 year |
| ☐ | Trilog Broadband Antenna (30 kHz~1 GHz) | Schwarzbeck Mess-Elektronik | VULB9168 | 416 | Nov. 11, 2020<br>Nov. 17, 2021 | 1 year |
| ☒ | Broadband Horn Antenna (1 GHz~18 GHz) | Schwarzbeck Mess-Elektronik | 9120D | 02207 | Jul. 09, 2021 | 1 year |
| ☐ | Broadband Horn Antenna (1 GHz~18 GHz) | Schwarzbeck Mess-Elektronik | 9120D | 9120D-550 | Aug. 24, 2021 | 1 year |
| ☒ | Broadband Horn Antenna (18 GHz~40 GHz) | Schwarzbeck Mess-Elektronik | 9170 | 9170-320 | Aug. 24, 2021 | 1 year |
| ☐ | Horn Antenna (18 GHz~40 GHz) | ETS | 3116 | 00086467 | Dec. 03, 2020<br>Dec. 03, 2021 | 1 year |
| ☐ | RF Cable | EMCI | EMC104-N-N-6000 | TE01-1 | Feb. 19, 2021 | 1 year |
| ☐ | Microwave Cable | EMCI | EMC104-SM-SM-13000 | 170814 | Feb. 19, 2021 | 1 year |
| ☐ | Microwave Cable | EMCI | EMC102-KM-KM-14000 | 151001 | Feb. 19, 2021 | 1 year |

Note: N.C.R. = No Calibration Request.

For Radiated Emissions
Test Period: Sep. 28, 2021 ~ Feb. 07, 2022
Testing Engineer: Hung.Chou, Eva Lee

| Radiation test sites | | Semi Anechoic Room | | | | |
|---|---|---|---|---|---|---|
| Use | Equipment | Manufacturer | Model Number | Serial Number | Cal. Date | Cal. Period |
| ☒ | Coaxial Cable | Titan | T0710AT327A10A 100 | J11005 | Aug. 06, 2021 | 1 year |
| ☒ | Coaxial Cable | Titan | T0710AT327A10A 900 | J11004 | Aug. 06, 2021 | 1 year |
| ☒ | Coaxial Cable | Titan | CFD400NL-LW | 001 | Aug. 06, 2021 | 1 year |
| ☐ | Bluetooth Tester | R&S | CBT | 100350 | Mar. 17, 2021 | 2 years |
| ☐ | Wireless Connectivity Tester | R&S | CMW270 | 102208 | Jun. 02, 2021 | 1 year |
| ☐ | Power Supply | KEITHLEY | 2303 | 4045290 | Feb. 01, 2021<br>Jan. 19, 2022 | 1 year |
| ☒ | Software | EZ EMC | 1.1.4.4 | N/A | N.C.R. | --- |

Note: N.C.R. = No Calibration Request.

## 1.6. Test Site Environment

| Items | Required (IEC 60068-1) | Actual |
|---|---|---|
| Temperature (°C) | 15-35 | 20-30 |
| Humidity (%RH) | 25-75 | 45-75 |

| Test Setting Condition | | |
|---|---|---|
| L.V. | Low Voltage | DC 9 V |
| N.V. | Normal Voltage | DC 24 V |
| H.V. | High Voltage | DC 30 V |
| L.T. | Low Temperature | -40 ℃ |
| N.T. | Normal Temperature | +25 ℃ |
| H.T. | High Temperature | +85 ℃ |

## 1.7. Measurement Uncertainty

| Parameter | Uncertainty |
|---|---|
| Conducted Output Average Power | 1.1 dB |
| Effective Radiated Power / Equivalent Isotropic Radiated Power | 6.3 dB |
| Frequency Stability | $1.2 \times 10^{-7}$ x fc (Hz) |
| Emission Bandwidth & Occupied Bandwidth | 4.5 % |
| Peak to Average Ratio | 1.1 dB |
| Channel Mask | 1.1 dB |
| Conducted Spurious Emission | 1.1 dB |

## 1.8. Summary of Test Result

| FCC Rule | Description | Result | Remark |
|---|---|---|---|
| §2.1046<br>§90.1215 | Conducted Output Power | Pass | --- |
| §90.1215 | Power Spectral Density | Pass | --- |
| §2.1049<br>§90.209 | Emission Bandwidth & Occupied Bandwidth | Reference | --- |
| §90.1215 | Peak Excursion | Pass | --- |
| §2.1051<br>§90.210 | Emission Mask | Pass | --- |
| §2.1051<br>§90.210 | Conducted Spurious Emission | Pass | --- |
| §2.1053<br>§90.210 | Field Strength of Spurious Radiation | Pass | --- |
| §2.1055<br>§90.213 | Frequency Stability for Temperature & Voltage | Pass | --- |

Decision Rule

■ Uncertainty is not included.

□ Uncertainty is included.

# 2 Measurement Procedure

## 2.1. Conducted Output Power Test

■ **Limit**

| Channel bandwidth (MHz) | Low power maximum conducted output power (dBm) (Note 1) | High power maximum conducted output power (dBm) (Note 2) |
|---|---|---|
| 1 | 7 | 20 |
| 5 | 14 | 27 |
| 10 | 17 | 30 |
| 15 | 18.8 | 31.8 |
| 20 | 20 | 33 |

Note 1: If transmitting antennas of directional gain greater than 9 dBi are used, both the maximum conducted output power and the peak power spectral density should be reduced by the amount in decibels that the directional gain of the antenna exceeds 9 dBi.

Note 2: If transmitting antennas of directional gain greater than 9 dBi are used, both the maximum conducted output power and the peak power spectral density should be reduced by the amount in decibels that the directional gain of the antenna exceeds 9 dBi. However, high power point-to-point and point-to-multipoint operations (both fixed and temporary-fixed rapid deployment) may employ transmitting antennas with directional gain up to 26 dBi without any corresponding reduction in the maximum conducted output power or spectral density. Corresponding reduction in the maximum conducted output power and peak power spectral density should be the amount in decibels that the directional gain of the antenna exceeds 26 dBi.

According FCC KDB 662911 D01 v02r01 – for power measurements,

■ **Directional Gain Calculated For Maximum Conducted Output Power**

| Bandwidth (MHz) | Directional Gain (dBi) | |
|---|---|---|
| | SISO | MIMO |
| 5 | 6 | 9.01 |
| 10 | 6 | 9.01 |
| 20 | 6 | 9.01 |

**SISO mode:**

Directional = Max. Gain：6 dBi < 9 dBi

**MIMO mode:**

Directional Gain = $G_{ANT}$ + 10*log(NANT) = 9.01 dBi > 9dBi

∗ power limit shall be reduced = 27 – 0.01 = 26.99 dBm (5 MHz)

∗ power limit shall be reduced = 30 – 0.01 = 29.99 dBm (10 MHz)

∗ power limit shall be reduced = 33 – 0.01 = 32.99 dBm (20 MHz)

■ **Test Setup**

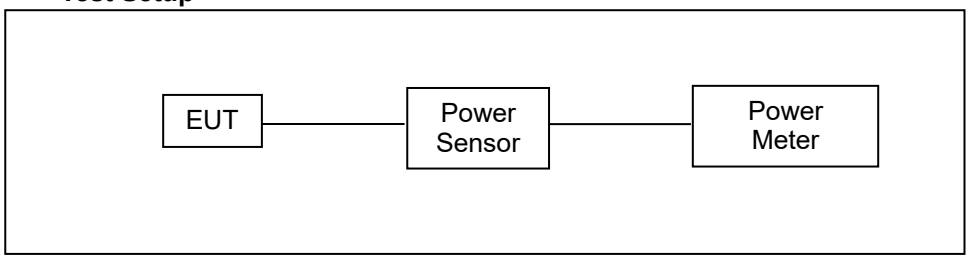


■ **Test Procedure**

a. The EUT was set up for the maximum power with Test Mode.

b. The test is performed in accordance with ANSI C63.26:2015 section 5.2.4.2 (a), Guidelines for Compliance Testing of licensed Devices.

## 2.2. Power Spectral Density Test

■ **Limit**

| Power spectral density (dBm/MHz) (Note 1) | |
|---|---|
| Low power Device (Note 1) | High power (Note 2) |
| 8 | 21 |

Note 1: If transmitting antennas of directional gain greater than 9 dBi are used, both the maximum conducted output power and the peak power spectral density should be reduced by the amount in decibels that the directional gain of the antenna exceeds 9 dBi.

Note 2: If transmitting antennas of directional gain greater than 9 dBi are used, both the maximum conducted output power and the peak power spectral density should be reduced by the amount in decibels that the directional gain of the antenna exceeds 9 dBi. However, high power point-to-point and point-to-multipoint operations (both fixed and temporary-fixed rapid deployment) may employ transmitting antennas with directional gain up to 26 dBi without any corresponding reduction in the maximum conducted output power or spectral density. Corresponding reduction in the maximum conducted output power and peak power spectral density should be the amount in decibels that the directional gain of the antenna exceeds 26 dBi.

According FCC KDB 662911 D01 v02r01 – for power measurements,

■ **Directional Gain Calculated For Power Spectral Density**

| Bandwidth (MHz) | Directional Gain (dBi) | |
|---|---|---|
| | SISO | MIMO |
| 5 | 6 | 9.01 |
| 10 | 6 | 9.01 |
| 20 | 6 | 9.01 |

**SISO mode:**

Directional = Max. Gain：6 dBi < 9 dBi

**MIMO mode:**

Directional Gain = $G_{ANT}$ + 10*log(NANT) = 9.01 dBi > 9dBi

∗ power limit shall be reduced = 21 – 0.01 = 20.99 dBm/MHz (5 MHz / 10 MHz / 20 MHz)

■ **Setup**

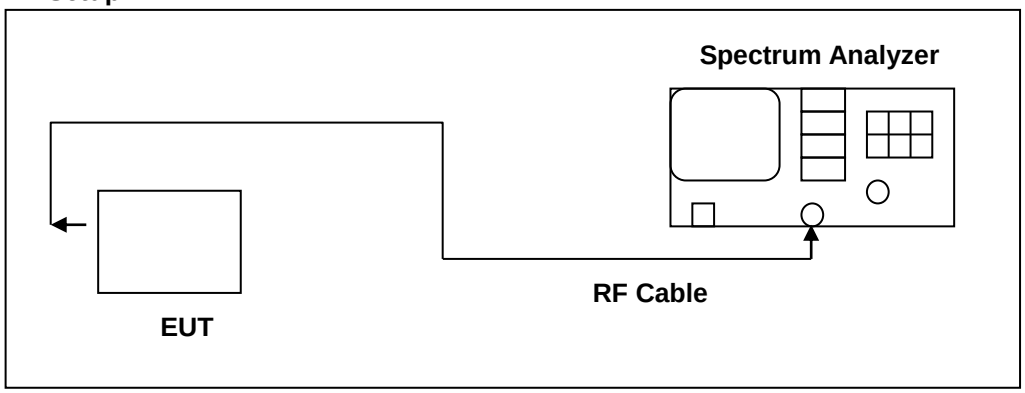


■ **Test Procedure**

1. The EUT was set up for the maximum power with Test Mode.
2. The test is performed in accordance with ANSI C63.26:2015 section 5.2.4.5, Guidelines for Compliance Testing of licensed Devices.

## 2.3. Emission Bandwidth & Occupied Bandwidth Test

### ■ Limit

The Occupied Bandwidth Limit:

N/A.

### ■ Setup

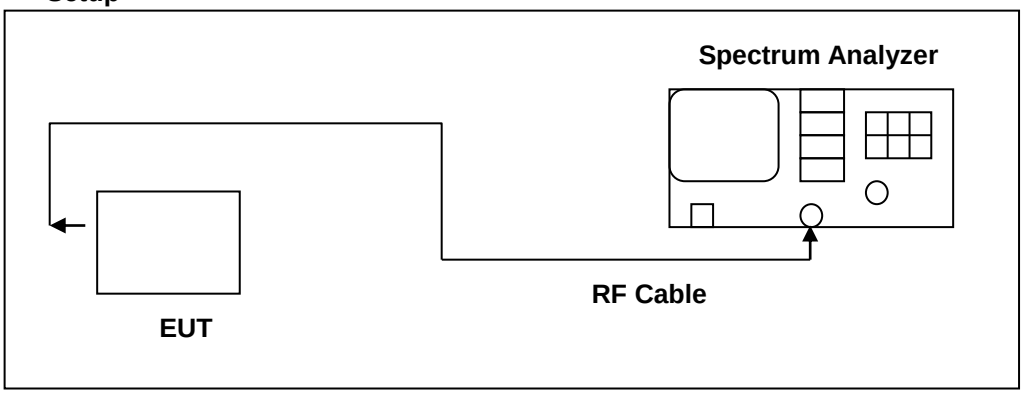


### ■ Test Procedure

1. The EUT was set up for the maximum power with Test Mode.
2. The test is performed in accordance with ANSI C63.26:2015 section 5.4.3 & 5.4.4, Guidelines for Compliance Testing of licensed Devices.

## 2.4. Peak Excursion Test

### ■ Limit

The Peak Excursion Limit:

≤ 13 dB.

### ■ Setup

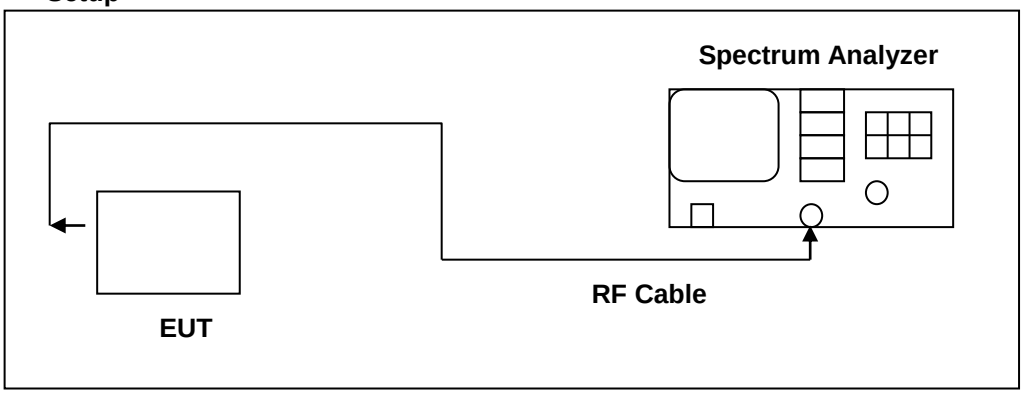


### ■ Test Procedure

1. The EUT was set up for the maximum power with Test Mode.
2. The test is performed in accordance with ANSI C63.26:2015 section 5.2.3.4, Guidelines for Compliance Testing of licensed Devices.

## 2.5. Channel Mask Test

### ■ Limit

The Emission Mask Limit:

§90.210(l) Emission Mask L.

For low power transmitters (20 dBm or less) operating in the 4940-4990 MHz frequency band, the power spectral density of the emissions must be attenuated below the output power of the transmitter as follows:

(1) On any frequency removed from the assigned frequency between 0-45 % of the authorized bandwidth (BW): 0 dB.

(2) On any frequency removed from the assigned frequency between 45-50 % of the authorized bandwidth: 219 log (% of (BW)/45) dB.

(3) On any frequency removed from the assigned frequency between 50-55 % of the authorized bandwidth: 10 + 242 log (% of (BW)/50) dB.

(4) On any frequency removed from the assigned frequency between 55-100 % of the authorized bandwidth: 20 + 31 log (% of (BW)/55) dB attenuation.

(5) On any frequency removed from the assigned frequency between 100-150 % of the authorized bandwidth: 28 + 68 log (% of (BW)/100) dB attenuation.

(6) On any frequency removed from the assigned frequency above 150 % of the authorized bandwidth: 40 dB.

§90.210(m)Emission Mask M.

For high power transmitters (greater that 20 dBm) operating in the 4940-4990 MHz frequency band, the power spectral density of the emissions must be attenuated below the output power of the transmitter as follows:

(1) On any frequency removed from the assigned frequency between 0-45 % of the authorized bandwidth (BW): 0 dB.

(2) On any frequency removed from the assigned frequency between 45-50 % of the authorized bandwidth: 568 log (% of (BW)/45) dB.

(3) On any frequency removed from the assigned frequency between 50-55 % of the authorized bandwidth: 26 + 145 log (% of BW/50) dB.

(4) On any frequency removed from the assigned frequency between 55-100 % of the authorized bandwidth: 32 + 31 log (% of (BW)/55) dB.

(5) On any frequency removed from the assigned frequency between 100-150 % of the authorized bandwidth: 40 + 57 log (% of (BW)/100) dB.

(6) On any frequency removed from the assigned frequency between above 150 % of the authorized bandwidth: 50 dB or 55 + 10 log (P) dB, whichever is the lesser attenuation.

■ **Setup**

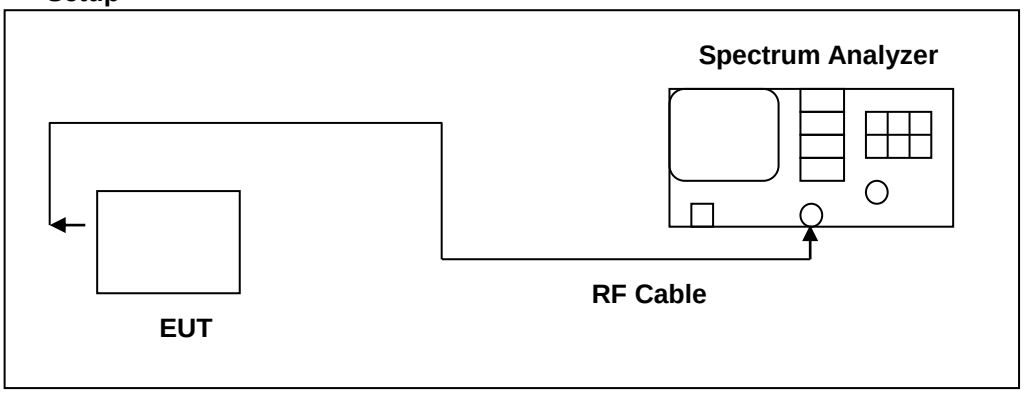


■ **Test Procedure**

1. The EUT was set up for the maximum power with Test Mode.
2. The following settings were used for the following measurements:

   Emission mask frequency within 150 % of the authorized bandwidth

   RBW: at least 1 % of the occupied bandwidth

   VBW: 30 kHz

   Detector: RMS

   Sweep type: Average

## 2.6. Conducted Spurious Emission Test

### ■ Limit

The Conducted Spurious Emission Limit:

§90.210(l) Emission Mask L.

For low power transmitters (20 dBm or less) operating in the 4940-4990 MHz frequency band, the power spectral density of the emissions must be attenuated below the output power of the transmitter as follows:

On any frequency removed from the assigned frequency above 150 % of the authorized bandwidth: 40 dB.

§90.210(m) Emission Mask M.

For high power transmitters (greater that 20 dBm) operating in the 4940-4990 MHz frequency band, the power spectral density of the emissions must be attenuated below the output power of the transmitter as follows:

On any frequency removed from the assigned frequency between above 150 % of the authorized bandwidth: 50 dB or 55 + 10 log (P) dB, whichever is the lesser attenuation.

### ■ Setup

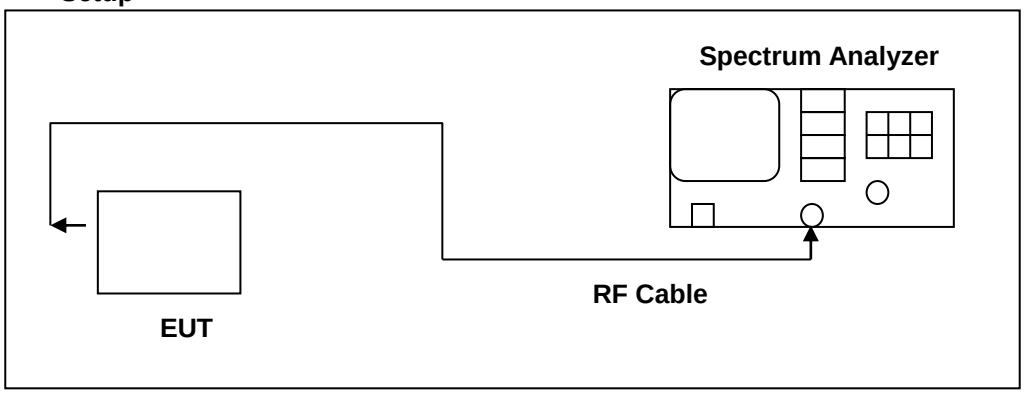


### ■ Test Procedure

1. The EUT was set up for the maximum power with Test Mode.
2. The following settings were used for the following measurements:
   Emission mask frequency without 150 % of the authorized bandwidth
   RBW: 1MHz at least 1 % of the occupied bandwidth
   VBW: 30 kHz
   Detector: RMS
   Sweep type: Average

## 2.7. Field Strength of Spurious Radiation Test

### ■ Limit

§90.210(l) Emission Mask L.

For low power transmitters (20 dBm or less) operating in the 4940-4990 MHz frequency band, the power spectral density of the emissions must be attenuated below the output power of the transmitter as follows:

On any frequency removed from the assigned frequency above 150 % of the authorized bandwidth: 40 dB.

§90.210(m) Emission Mask M.

For high power transmitters (greater that 20 dBm) operating in the 4940-4990 MHz frequency band, the power spectral density of the emissions must be attenuated below the output power of the transmitter as follows:

On any frequency removed from the assigned frequency between above 150 % of the authorized bandwidth: 50 dB or 55 + 10 log (P) dB, whichever is the lesser attenuation.

It is measured by means of a calibrated spectrum analyzer and scanned from 30 MHz up to a frequency including its 10th harmonic.

### ■ Setup

Below 1 GHz

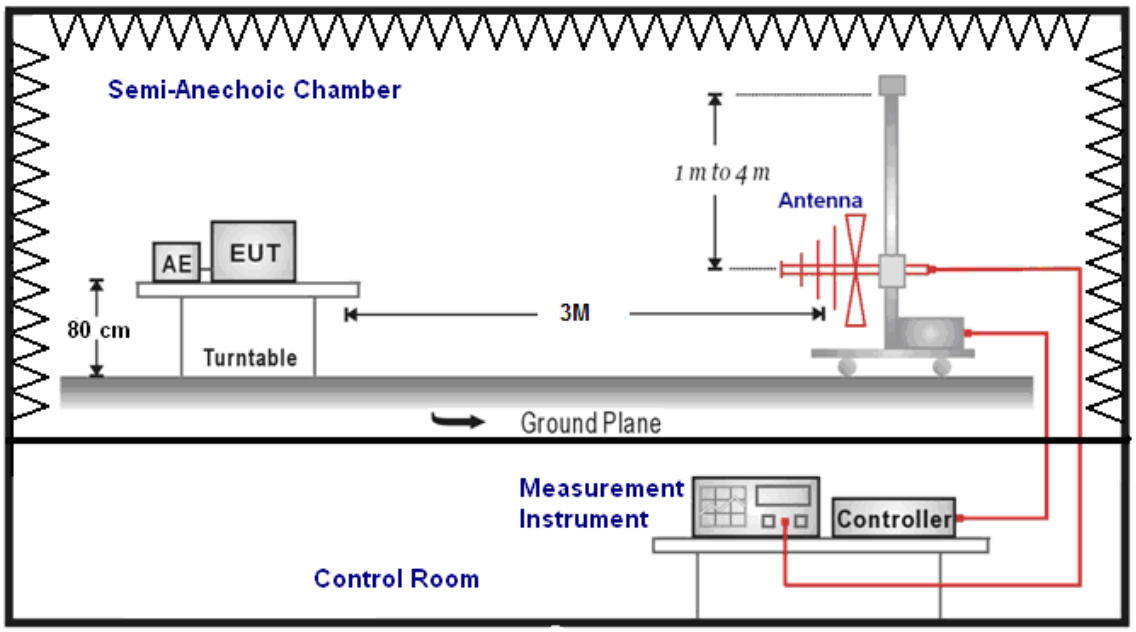

Above 1 GHz

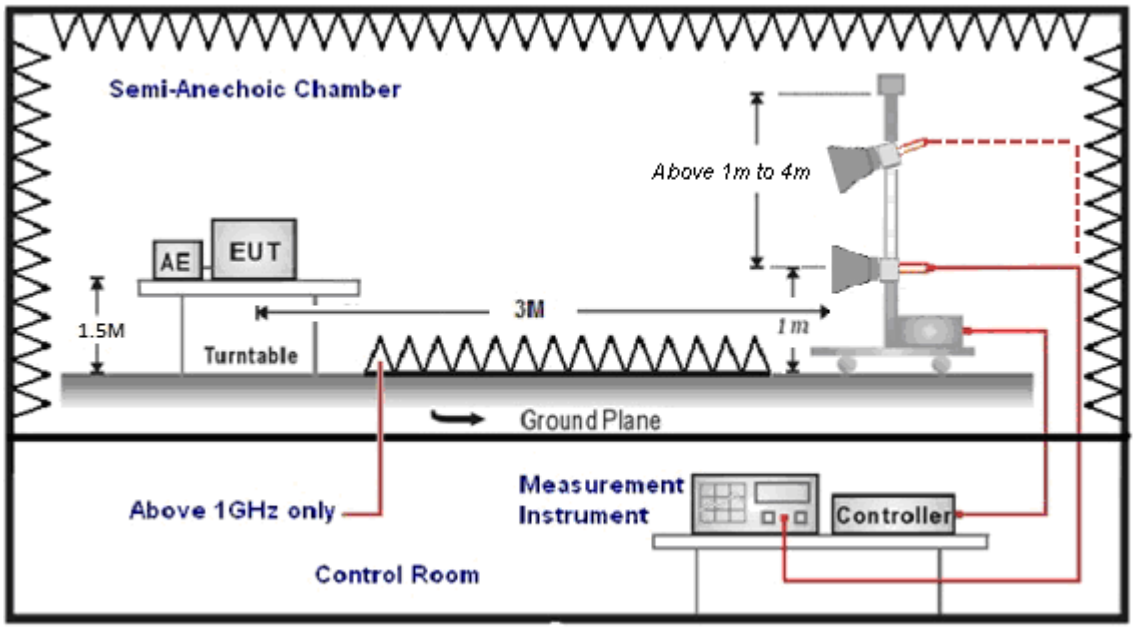


For Substituted Method Test Set-UP

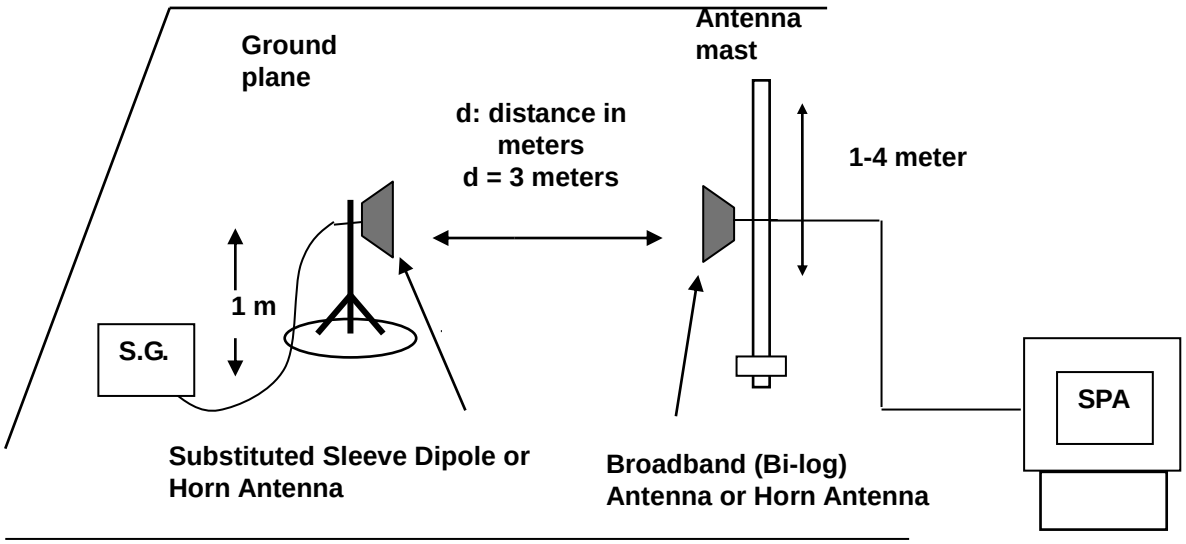

## ■ Test Procedure

a. The EUT was set up for the maximum power with Test mode. The power was measured with Spectrum Analyzer (RBW: 1 MHz, VBW: 30 kHz, Detector: Average mode). All measurements were done at 3 channels (low, middle and high operational frequency range).

b. E.I.R.P power measurement. In the semi-anechoic chamber, EUT placed on the 0.8 m (above 1 GHz for 1.5 m) height of Turn Table, rotated the table around 360 degrees to search the maximum radiation power and receiver antenna shall be rotated vertical and horizontal polarization and moved height from 1 m to 4 m to find the maximum polar radiated power. The “Read Value” is the spectrum reading the maximum power value.

c. The substitution antenna (Note:1 & 2) is substituted for EUT at the same position and signals generator export the CW signal to the substitution antenna via a TX cable. Rotated the Turn Table and moved receiving antenna to find the maximum radiation power. Adjust output power level of S.G to get a Value of spectrum reading equal to “Read Value” of step a. Record the power level of S.G.

d. E.I.R.P. = Output power level of S.G - TX cable loss + Antenna gain of substitution horn

e. E.R.P. = E.I.R.P.- 2.15 dB

f. Measurement range 30 MHz - 10 th Harmonic

Note: 1. Below 1 GHz Substituted Method Test：Sleeve dipole antenna to Bi-Log Antenna

2. Above 1 GHz Substituted Method Test：Horn antenna to Horn Antenna

## 2.8. Frequency Stability (Temperature & Voltage Variation) Test

### ■ Limit

The applicant shall ensure frequency stability by showing that the occupied bandwidth is maintained within the band of operation when tested at the temperature and supply voltage variations.

### ■ Setup

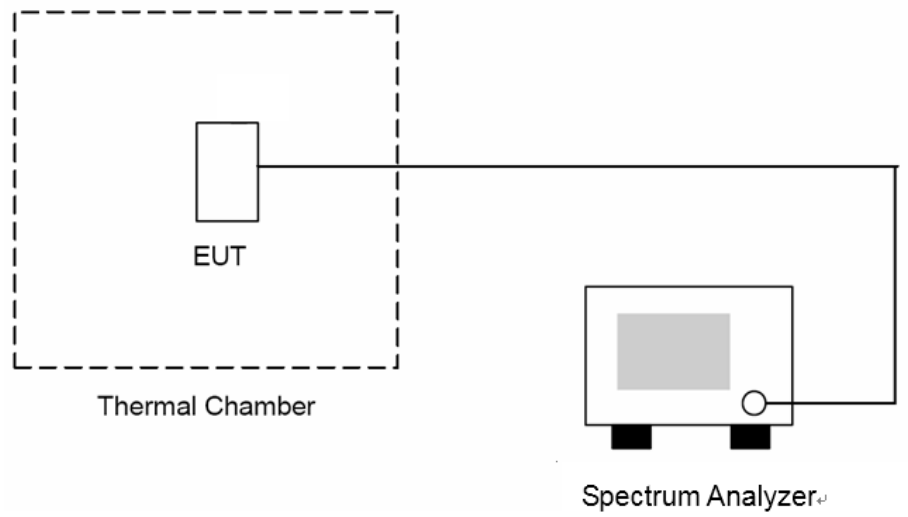


### ■ Test Procedure

1. The EUT and test equipment were set up as shown on the following section.
2. With all power removed, the temperature was decreased to -30 ℃ and permitted to stabilize for three hours. Power was applied and the maximum change in frequency was note within one minute.
3. With power OFF, the temperature was raised in 10 ℃ steps. The sample was permitted to stabilize at each step for at least one-half hour. Power was applied and the maximum frequency change was noted within one minute.
4. The EUT was placed in a temperature chamber at 25±5 ℃ and connected as the following section.
5. The power supply voltage to the EUT was varied from BEP to 115 % of the nominal value measured at the input to the EUT.
6. The temperature tests were performed for the worst case.
7. Test data was recorded.

# 3 Test Results

## 3.1. Conducted Output Power

| Test Mode | Frequency (MHz) | RF Power setting in Test Software | | Test Software Version |
|---|---|---|---|---|
| | | ANT-0 | ANT-1 | |
| Mode 1 | 4942.5 | 24 | 24 | Tera Term |
| | 4967.5 | 23 | 23 | |
| | 4987.5 | 24 | 24 | |
| Mode 2 | 4945.0 | 23 | 23 | |
| | 4965.0 | 23 | 23 | |
| | 4985.0 | 23 | 23 | |
| Mode 3 | 4950.0 | 23 | 23 | |
| | 4965.0 | 23 | 23 | |
| | 4980.0 | 23 | 23 | |
| Mode 4 | 4942.5 | 24 | 24 | |
| | 4967.5 | 23 | 23 | |
| | 4987.5 | 22 | 22 | |
| Mode 5 | 4945.0 | 23 | 23 | |
| | 4965.0 | 22 | 22 | |
| | 4985.0 | 22 | 22 | |
| Mode 6 | 4950.0 | 23 | 23 | |
| | 4965.0 | 23 | 23 | |
| | 4980.0 | 23 | 23 | |

| Test Mode | Frequency (MHz) | RF Power setting in Test Software | | Test Software Version |
|---|---|---|---|---|
| | | ANT-0 | ANT-1 | |
| Mode 7 | 4942.5 | 23 | 23 | Tera Term |
| | 4967.5 | 22 | 22 | |
| | 4987.5 | 22 | 22 | |
| Mode 8 | 4945.0 | 23 | 23 | |
| | 4965.0 | 22 | 22 | |
| | 4985.0 | 22 | 22 | |
| Mode 9 | 4950.0 | 22 | 22 | |
| | 4965.0 | 22 | 22 | |
| | 4980.0 | 22 | 22 | |
| Mode 10 | 4942.5 | 22 | 22 | |
| | 4967.5 | 21 | 21 | |
| | 4987.5 | 21 | 21 | |
| Mode 11 | 4945.0 | 21 | 21 | |
| | 4965.0 | 21 | 21 | |
| | 4985.0 | 21 | 21 | |
| Mode 12 | 4950.0 | 22 | 22 | |
| | 4965.0 | 22 | 22 | |
| | 4980.0 | 21 | 21 | |

| Test Mode | Mode 1: SISO_5 MHz Continuous TX mode (Legacy) | | | | | | |
|---|---|---|---|---|---|---|---|
| Frequency (MHz) | Modulation | Data Rate | ANT-0 | | ANT-1 | | Limit (dBm) |
| | | | Max. Output Power | | | | |
| | | | (dBm) | (W) | (dBm) | (W) | |
| 4942.5 | BPSK | 6 M | 23.48 | 0.223 | 23.36 | 0.217 | ≤ 27.00 |
| 4967.5 | | | 23.37 | 0.217 | 22.77 | 0.189 | ≤ 27.00 |
| 4987.5 | | | **24.25** | **0.266** | 23.79 | 0.239 | ≤ 27.00 |
| 4942.5 | QPSK | 12 M | 23.14 | 0.206 | 23.15 | 0.207 | ≤ 27.00 |
| 4967.5 | | | 23.09 | 0.204 | 22.56 | 0.180 | ≤ 27.00 |
| 4987.5 | | | 24.05 | 0.254 | 23.61 | 0.230 | ≤ 27.00 |
| 4942.5 | | 18 M | 23.23 | 0.210 | 23.05 | 0.202 | ≤ 27.00 |
| 4967.5 | | | 23.09 | 0.204 | 22.56 | 0.180 | ≤ 27.00 |
| 4987.5 | | | 24.05 | 0.254 | 23.52 | 0.225 | ≤ 27.00 |
| 4942.5 | 16QAM | 24 M | 23.25 | 0.211 | 23.14 | 0.206 | ≤ 27.00 |
| 4967.5 | | | 23.14 | 0.206 | 22.57 | 0.181 | ≤ 27.00 |
| 4987.5 | | | 23.98 | 0.250 | 23.43 | 0.220 | ≤ 27.00 |
| 4942.5 | | 36 M | 23.26 | 0.212 | 22.95 | 0.197 | ≤ 27.00 |
| 4967.5 | | | 23.22 | 0.210 | 22.44 | 0.175 | ≤ 27.00 |
| 4987.5 | | | 24.07 | 0.255 | 23.43 | 0.220 | ≤ 27.00 |
| 4942.5 | 64QAM | 48 M | 23.12 | 0.205 | 22.90 | 0.195 | ≤ 27.00 |
| 4967.5 | | | 23.17 | 0.207 | 22.32 | 0.171 | ≤ 27.00 |
| 4987.5 | | | 23.88 | 0.244 | 23.42 | 0.220 | ≤ 27.00 |
| 4942.5 | | 54 M | 23.32 | 0.215 | 23.02 | 0.200 | ≤ 27.00 |
| 4967.5 | | | 23.21 | 0.209 | 22.38 | 0.173 | ≤ 27.00 |
| 4987.5 | | | 24.01 | 0.252 | 23.53 | 0.225 | ≤ 27.00 |

Note 1: The conducted power testing result was used average detector.

Note 2: The relevant measured result has the offset with cable loss already.

| Test Mode | Mode 2: SISO_10 MHz Continuous TX mode (Legacy) | | | | | | |
|---|---|---|---|---|---|---|---|
| Frequency (MHz) | Modulation | Data Rate | ANT-0 | | ANT-1 | | Limit (dBm) |
| | | | Max. Output Power | | | | |
| | | | (dBm) | (W) | (dBm) | (W) | |
| 4945.0 | BPSK | 6 M | 22.97 | 0.198 | 22.85 | 0.193 | ≤ 30.00 |
| 4965.0 | | | 23.32 | 0.215 | 23.21 | 0.209 | ≤ 30.00 |
| 4985.0 | | | **23.37** | **0.217** | 23.03 | 0.201 | ≤ 30.00 |
| 4945.0 | QPSK | 12 M | 22.61 | 0.182 | 22.81 | 0.191 | ≤ 30.00 |
| 4965.0 | | | 22.98 | 0.199 | 23.00 | 0.200 | ≤ 30.00 |
| 4985.0 | | | 23.06 | 0.202 | 22.90 | 0.195 | ≤ 30.00 |
| 4945.0 | | 18 M | 22.57 | 0.181 | 22.84 | 0.192 | ≤ 30.00 |
| 4965.0 | | | 22.95 | 0.197 | 22.98 | 0.199 | ≤ 30.00 |
| 4985.0 | | | 23.04 | 0.201 | 22.83 | 0.192 | ≤ 30.00 |
| 4945.0 | 16QAM | 24 M | 22.55 | 0.180 | 22.73 | 0.187 | ≤ 30.00 |
| 4965.0 | | | 22.90 | 0.195 | 23.15 | 0.207 | ≤ 30.00 |
| 4985.0 | | | 23.00 | 0.200 | 22.95 | 0.197 | ≤ 30.00 |
| 4945.0 | | 36 M | 22.61 | 0.182 | 22.61 | 0.182 | ≤ 30.00 |
| 4965.0 | | | 22.97 | 0.198 | 23.01 | 0.200 | ≤ 30.00 |
| 4985.0 | | | 23.10 | 0.204 | 22.90 | 0.195 | ≤ 30.00 |
| 4945.0 | 64QAM | 48 M | 22.68 | 0.185 | 22.61 | 0.182 | ≤ 30.00 |
| 4965.0 | | | 22.94 | 0.197 | 23.04 | 0.201 | ≤ 30.00 |
| 4985.0 | | | 23.07 | 0.203 | 22.92 | 0.196 | ≤ 30.00 |
| 4945.0 | | 54 M | 22.80 | 0.191 | 22.75 | 0.188 | ≤ 30.00 |
| 4965.0 | | | 23.12 | 0.205 | 23.15 | 0.207 | ≤ 30.00 |
| 4985.0 | | | 23.17 | 0.207 | 22.87 | 0.194 | ≤ 30.00 |

Note 1: The conducted power testing result was used average detector.

Note 2: The relevant measured result has the offset with cable loss already.

| Test Mode | Mode 3: SISO_20 MHz Continuous TX mode (Legacy) | | | | | | |
|---|---|---|---|---|---|---|---|
| Frequency (MHz) | Modulation | Data Rate | ANT-0 | | ANT-1 | | Limit (dBm) |
| | | | Max. Output Power | | | | |
| | | | (dBm) | (W) | (dBm) | (W) | |
| 4950.0 | BPSK | 6 M | 23.29 | 0.213 | 22.70 | 0.186 | ≤ 33.00 |
| 4965.0 | | | **23.37** | **0.217** | 23.12 | 0.205 | ≤ 33.00 |
| 4980.0 | | | 23.28 | 0.213 | 22.98 | 0.199 | ≤ 33.00 |
| 4950.0 | QPSK | 12 M | 23.03 | 0.201 | 22.41 | 0.174 | ≤ 33.00 |
| 4965.0 | | | 22.95 | 0.197 | 22.93 | 0.196 | ≤ 33.00 |
| 4980.0 | | | 22.89 | 0.195 | 22.61 | 0.182 | ≤ 33.00 |
| 4950.0 | | 18 M | 22.97 | 0.198 | 22.50 | 0.178 | ≤ 33.00 |
| 4965.0 | | | 22.98 | 0.199 | 22.92 | 0.196 | ≤ 33.00 |
| 4980.0 | | | 23.02 | 0.200 | 22.57 | 0.181 | ≤ 33.00 |
| 4950.0 | 16QAM | 24 M | 23.01 | 0.200 | 22.32 | 0.171 | ≤ 33.00 |
| 4965.0 | | | 22.96 | 0.198 | 22.79 | 0.190 | ≤ 33.00 |
| 4980.0 | | | 22.99 | 0.199 | 22.75 | 0.188 | ≤ 33.00 |
| 4950.0 | | 36 M | 22.95 | 0.197 | 22.46 | 0.176 | ≤ 33.00 |
| 4965.0 | | | 23.11 | 0.205 | 22.86 | 0.193 | ≤ 33.00 |
| 4980.0 | | | 23.08 | 0.203 | 22.90 | 0.195 | ≤ 33.00 |
| 4950.0 | 64QAM | 48 M | 22.99 | 0.199 | 22.61 | 0.182 | ≤ 33.00 |
| 4965.0 | | | 23.06 | 0.202 | 22.84 | 0.192 | ≤ 33.00 |
| 4980.0 | | | 23.03 | 0.201 | 22.77 | 0.189 | ≤ 33.00 |
| 4950.0 | | 54 M | 22.90 | 0.195 | 22.49 | 0.177 | ≤ 33.00 |
| 4965.0 | | | 22.95 | 0.197 | 23.05 | 0.202 | ≤ 33.00 |
| 4980.0 | | | 23.03 | 0.201 | 22.67 | 0.185 | ≤ 33.00 |

Note 1: The conducted power testing result was used average detector.

Note 2: The relevant measured result has the offset with cable loss already.

| Test Mode | Mode 4: SISO_5 MHz Continuous TX mode | | | | | | |
|---|---|---|---|---|---|---|---|
| Frequency (MHz) | Modulation | Data Rate | ANT-0 | | ANT-1 | | Limit (dBm) |
| | | | Max. Output Power | | | | |
| | | | (dBm) | (W) | (dBm) | (W) | |
| 4942.5 | BPSK | MSC0 | **24.04** | **0.254** | 23.90 | 0.245 | ≤ 27.00 |
| 4967.5 | | | 23.88 | 0.244 | 23.55 | 0.226 | ≤ 27.00 |
| 4987.5 | | | 23.05 | 0.202 | 22.92 | 0.196 | ≤ 27.00 |
| 4942.5 | QPSK | MSC1 | 23.92 | 0.247 | 23.72 | 0.236 | ≤ 27.00 |
| 4967.5 | | | 23.73 | 0.236 | 23.42 | 0.220 | ≤ 27.00 |
| 4987.5 | | | 22.85 | 0.193 | 22.74 | 0.188 | ≤ 27.00 |
| 4942.5 | | MSC2 | 23.72 | 0.236 | 23.57 | 0.228 | ≤ 27.00 |
| 4967.5 | | | 23.55 | 0.226 | 23.24 | 0.211 | ≤ 27.00 |
| 4987.5 | | | 22.72 | 0.187 | 22.61 | 0.182 | ≤ 27.00 |
| 4942.5 | 16QAM | MSC3 | 23.65 | 0.232 | 23.51 | 0.224 | ≤ 27.00 |
| 4967.5 | | | 23.48 | 0.223 | 23.20 | 0.209 | ≤ 27.00 |
| 4987.5 | | | 22.64 | 0.184 | 22.56 | 0.180 | ≤ 27.00 |
| 4942.5 | | MSC4 | 23.61 | 0.230 | 23.49 | 0.223 | ≤ 27.00 |
| 4967.5 | | | 23.46 | 0.222 | 23.18 | 0.208 | ≤ 27.00 |
| 4987.5 | | | 22.61 | 0.182 | 22.48 | 0.177 | ≤ 27.00 |
| 4942.5 | 64QAM | MSC5 | 23.64 | 0.231 | 23.44 | 0.221 | ≤ 27.00 |
| 4967.5 | | | 23.46 | 0.222 | 23.18 | 0.208 | ≤ 27.00 |
| 4987.5 | | | 22.64 | 0.184 | 22.49 | 0.177 | ≤ 27.00 |
| 4942.5 | | MSC7 | 23.65 | 0.232 | 23.53 | 0.225 | ≤ 27.00 |
| 4967.5 | | | 23.44 | 0.221 | 23.14 | 0.206 | ≤ 27.00 |
| 4987.5 | | | 22.61 | 0.182 | 22.46 | 0.176 | ≤ 27.00 |

Note 1: The conducted power testing result was used average detector.

Note 2: The relevant measured result has the offset with cable loss already.

| Test Mode | Mode 5: SISO_10 MHz Continuous TX mode | | | | | | |
|---|---|---|---|---|---|---|---|
| Frequency (MHz) | Modulation | Data Rate | ANT-0 | | ANT-1 | | Limit (dBm) |
| | | | Max. Output Power | | | | |
| | | | (dBm) | (W) | (dBm) | (W) | |
| 4945.0 | BPSK | MSC0 | **23.56** | **0.227** | 23.43 | 0.220 | ≤ 30.00 |
| 4965.0 | | | 23.10 | 0.204 | 22.82 | 0.191 | ≤ 30.00 |
| 4985.0 | | | 22.94 | 0.197 | 22.86 | 0.193 | ≤ 30.00 |
| 4945.0 | QPSK | MSC1 | 23.41 | 0.219 | 23.22 | 0.210 | ≤ 30.00 |
| 4965.0 | | | 22.90 | 0.195 | 22.66 | 0.185 | ≤ 30.00 |
| 4985.0 | | | 22.75 | 0.188 | 22.73 | 0.187 | ≤ 30.00 |
| 4945.0 | | MSC2 | 23.28 | 0.213 | 23.13 | 0.206 | ≤ 30.00 |
| 4965.0 | | | 22.80 | 0.191 | 22.52 | 0.179 | ≤ 30.00 |
| 4985.0 | | | 22.66 | 0.185 | 22.58 | 0.181 | ≤ 30.00 |
| 4945.0 | 16QAM | MSC3 | 23.16 | 0.207 | 23.01 | 0.200 | ≤ 30.00 |
| 4965.0 | | | 22.70 | 0.186 | 22.44 | 0.175 | ≤ 30.00 |
| 4985.0 | | | 22.51 | 0.178 | 22.42 | 0.175 | ≤ 30.00 |
| 4945.0 | | MSC4 | 23.13 | 0.206 | 22.98 | 0.199 | ≤ 30.00 |
| 4965.0 | | | 22.63 | 0.183 | 22.37 | 0.173 | ≤ 30.00 |
| 4985.0 | | | 22.48 | 0.177 | 22.42 | 0.175 | ≤ 30.00 |
| 4945.0 | 64QAM | MSC5 | 23.14 | 0.206 | 22.97 | 0.198 | ≤ 30.00 |
| 4965.0 | | | 22.73 | 0.187 | 22.38 | 0.173 | ≤ 30.00 |
| 4985.0 | | | 22.49 | 0.177 | 22.46 | 0.176 | ≤ 30.00 |
| 4945.0 | | MSC7 | 23.15 | 0.207 | 22.98 | 0.199 | ≤ 30.00 |
| 4965.0 | | | 22.71 | 0.187 | 22.44 | 0.175 | ≤ 30.00 |
| 4985.0 | | | 22.56 | 0.180 | 22.41 | 0.174 | ≤ 30.00 |

Note 1: The conducted power testing result was used average detector.

Note 2: The relevant measured result has the offset with cable loss already.

| Test Mode | Mode 6: SISO_20 MHz Continuous TX mode | | | | | | |
|---|---|---|---|---|---|---|---|
| Frequency (MHz) | Modulation | Data Rate | ANT-0 | | ANT-1 | | Limit (dBm) |
| | | | Max. Output Power | | | | |
| | | | (dBm) | (W) | (dBm) | (W) | |
| 4950.0 | BPSK | MSC0 | 23.28 | 0.213 | 22.60 | 0.182 | ≤ 33.00 |
| 4965.0 | | | **23.34** | **0.216** | 23.05 | 0.202 | ≤ 33.00 |
| 4980.0 | | | 23.24 | 0.211 | 22.92 | 0.196 | ≤ 33.00 |
| 4950.0 | QPSK | MSC1 | 22.94 | 0.197 | 22.39 | 0.173 | ≤ 33.00 |
| 4965.0 | | | 23.16 | 0.207 | 22.73 | 0.187 | ≤ 33.00 |
| 4980.0 | | | 22.92 | 0.196 | 22.63 | 0.183 | ≤ 33.00 |
| 4950.0 | | MSC2 | 22.92 | 0.196 | 22.41 | 0.174 | ≤ 33.00 |
| 4965.0 | | | 23.11 | 0.205 | 22.89 | 0.195 | ≤ 33.00 |
| 4980.0 | | | 22.97 | 0.198 | 22.58 | 0.181 | ≤ 33.00 |
| 4950.0 | 16QAM | MSC3 | 23.04 | 0.201 | 22.34 | 0.171 | ≤ 33.00 |
| 4965.0 | | | 23.12 | 0.205 | 22.90 | 0.195 | ≤ 33.00 |
| 4980.0 | | | 23.05 | 0.202 | 22.55 | 0.180 | ≤ 33.00 |
| 4950.0 | | MSC4 | 23.09 | 0.204 | 22.41 | 0.174 | ≤ 33.00 |
| 4965.0 | | | 23.08 | 0.203 | 22.90 | 0.195 | ≤ 33.00 |
| 4980.0 | | | 23.01 | 0.200 | 22.64 | 0.184 | ≤ 33.00 |
| 4950.0 | 64QAM | MSC5 | 23.21 | 0.209 | 22.38 | 0.173 | ≤ 33.00 |
| 4965.0 | | | 23.23 | 0.210 | 22.95 | 0.197 | ≤ 33.00 |
| 4980.0 | | | 23.02 | 0.200 | 22.83 | 0.192 | ≤ 33.00 |
| 4950.0 | | MSC7 | 23.18 | 0.208 | 22.51 | 0.178 | ≤ 33.00 |
| 4965.0 | | | 23.13 | 0.206 | 22.87 | 0.194 | ≤ 33.00 |
| 4980.0 | | | 23.21 | 0.209 | 22.73 | 0.187 | ≤ 33.00 |

Note 1: The conducted power testing result was used average detector.

Note 2: The relevant measured result has the offset with cable loss already.

| Test Mode | Mode 7: MIMO_5 MHz Continuous TX mode (Legacy) | | | | | | | | |
|---|---|---|---|---|---|---|---|---|---|
| Frequency (MHz) | Modulation | Data Rate | ANT-0 | | ANT-1 | | ANT-0+1 | | Limit (dBm) |
| | | | Max. Output Power | | | | | | |
| | | | (dBm) | (W) | (dBm) | (W) | (dBm) | (W) | |
| 4942.5 | BPSK | 6 M | 23.36 | 0.217 | 23.06 | 0.202 | 26.22 | 0.419 | ≤ 26.99 |
| 4967.5 | | | 23.29 | 0.213 | 22.70 | 0.186 | 26.02 | 0.400 | ≤ 26.99 |
| 4987.5 | | | 23.39 | 0.218 | 23.11 | 0.205 | **26.26** | **0.423** | ≤ 26.99 |
| 4942.5 | QPSK | 12 M | 23.18 | 0.208 | 22.72 | 0.187 | 25.97 | 0.395 | ≤ 26.99 |
| 4967.5 | | | 22.97 | 0.198 | 22.41 | 0.174 | 25.71 | 0.372 | ≤ 26.99 |
| 4987.5 | | | 23.30 | 0.214 | 23.07 | 0.203 | 26.20 | 0.417 | ≤ 26.99 |
| 4942.5 | | 18 M | 23.06 | 0.202 | 22.94 | 0.197 | 26.01 | 0.399 | ≤ 26.99 |
| 4967.5 | | | 23.05 | 0.202 | 22.56 | 0.180 | 25.82 | 0.382 | ≤ 26.99 |
| 4987.5 | | | 23.11 | 0.205 | 22.94 | 0.197 | 26.04 | 0.402 | ≤ 26.99 |
| 4942.5 | 16QAM | 24 M | 23.08 | 0.203 | 22.78 | 0.190 | 25.94 | 0.393 | ≤ 26.99 |
| 4967.5 | | | 23.13 | 0.206 | 22.36 | 0.172 | 25.77 | 0.378 | ≤ 26.99 |
| 4987.5 | | | 23.21 | 0.209 | 23.04 | 0.201 | 26.14 | 0.411 | ≤ 26.99 |
| 4942.5 | | 36 M | 23.01 | 0.200 | 22.75 | 0.188 | 25.89 | 0.388 | ≤ 26.99 |
| 4967.5 | | | 22.91 | 0.195 | 22.53 | 0.179 | 25.73 | 0.374 | ≤ 26.99 |
| 4987.5 | | | 23.02 | 0.200 | 22.94 | 0.197 | 25.99 | 0.397 | ≤ 26.99 |
| 4942.5 | 64QAM | 48 M | 22.90 | 0.195 | 22.82 | 0.191 | 25.87 | 0.386 | ≤ 26.99 |
| 4967.5 | | | 22.83 | 0.192 | 22.40 | 0.174 | 25.63 | 0.366 | ≤ 26.99 |
| 4987.5 | | | 23.13 | 0.206 | 23.00 | 0.200 | 26.08 | 0.406 | ≤ 26.99 |
| 4942.5 | | 54 M | 23.10 | 0.204 | 22.88 | 0.194 | 26.00 | 0.398 | ≤ 26.99 |
| 4967.5 | | | 22.93 | 0.196 | 22.49 | 0.177 | 25.73 | 0.374 | ≤ 26.99 |
| 4987.5 | | | 23.18 | 0.208 | 22.87 | 0.194 | 26.04 | 0.402 | ≤ 26.99 |

Note 1: The conducted power testing result was used average detector.

Note 2: The relevant measured result has the offset with cable loss already.

| Test Mode | Mode 8: MIMO_10 MHz Continuous TX mode (Legacy) | | | | | | | | |
|---|---|---|---|---|---|---|---|---|---|
| Frequency (MHz) | Modulation | Data Rate | ANT-0 | | ANT-1 | | ANT-0+1 | | Limit (dBm) |
| | | | Max. Output Power | | | | | | |
| | | | (dBm) | (W) | (dBm) | (W) | (dBm) | (W) | |
| 4945.0 | BPSK | 6 M | 23.10 | 0.204 | 22.74 | 0.188 | 25.93 | 0.392 | ≤ 29.99 |
| 4965.0 | | | 23.13 | 0.206 | 22.93 | 0.196 | 26.04 | 0.402 | ≤ 29.99 |
| 4985.0 | | | 23.24 | 0.211 | 23.05 | 0.202 | **26.16** | **0.413** | ≤ 29.99 |
| 4945.0 | QPSK | 12 M | 22.91 | 0.195 | 22.40 | 0.174 | 25.67 | 0.369 | ≤ 29.99 |
| 4965.0 | | | 22.94 | 0.197 | 22.59 | 0.182 | 25.78 | 0.378 | ≤ 29.99 |
| 4985.0 | | | 23.02 | 0.200 | 22.79 | 0.190 | 25.92 | 0.391 | ≤ 29.99 |
| 4945.0 | | 18 M | 22.80 | 0.191 | 22.48 | 0.177 | 25.65 | 0.367 | ≤ 29.99 |
| 4965.0 | | | 23.00 | 0.200 | 22.56 | 0.180 | 25.80 | 0.380 | ≤ 29.99 |
| 4985.0 | | | 23.11 | 0.205 | 22.78 | 0.190 | 25.96 | 0.394 | ≤ 29.99 |
| 4945.0 | 16QAM | 24 M | 22.90 | 0.195 | 22.52 | 0.179 | 25.72 | 0.373 | ≤ 29.99 |
| 4965.0 | | | 22.87 | 0.194 | 22.72 | 0.187 | 25.81 | 0.381 | ≤ 29.99 |
| 4985.0 | | | 23.13 | 0.206 | 22.83 | 0.192 | 25.99 | 0.397 | ≤ 29.99 |
| 4945.0 | | 36 M | 22.85 | 0.193 | 22.60 | 0.182 | 25.74 | 0.375 | ≤ 29.99 |
| 4965.0 | | | 22.94 | 0.197 | 22.71 | 0.187 | 25.84 | 0.384 | ≤ 29.99 |
| 4985.0 | | | 22.92 | 0.196 | 22.92 | 0.196 | 25.93 | 0.392 | ≤ 29.99 |
| 4945.0 | 64QAM | 48 M | 22.84 | 0.192 | 22.48 | 0.177 | 25.67 | 0.369 | ≤ 29.99 |
| 4965.0 | | | 22.94 | 0.197 | 22.73 | 0.187 | 25.85 | 0.385 | ≤ 29.99 |
| 4985.0 | | | 22.83 | 0.192 | 23.01 | 0.200 | 25.93 | 0.392 | ≤ 29.99 |
| 4945.0 | | 54 M | 22.87 | 0.194 | 22.68 | 0.185 | 25.79 | 0.379 | ≤ 29.99 |
| 4965.0 | | | 22.87 | 0.194 | 22.69 | 0.186 | 25.79 | 0.379 | ≤ 29.99 |
| 4985.0 | | | 23.04 | 0.201 | 22.85 | 0.193 | 25.96 | 0.394 | ≤ 29.99 |

Note 1: The conducted power testing result was used average detector.

Note 2: The relevant measured result has the offset with cable loss already.

| Test Mode | Mode 9: MIMO_20 MHz Continuous TX mode (Legacy) | | | | | | | | |
|---|---|---|---|---|---|---|---|---|---|
| Frequency (MHz) | Modulation | Data Rate | ANT-0 | | ANT-1 | | ANT-0+1 | | Limit (dBm) |
| | | | Max. Output Power | | | | | | |
| | | | (dBm) | (W) | (dBm) | (W) | (dBm) | (W) | |
| 4950.0 | BPSK | 6 M | 22.98 | 0.199 | 22.28 | 0.169 | 25.65 | 0.367 | ≤ 32.99 |
| 4965.0 | | | 23.11 | 0.205 | 22.65 | 0.184 | **25.90** | **0.389** | ≤ 32.99 |
| 4980.0 | | | 23.19 | 0.208 | 22.54 | 0.179 | 25.89 | 0.388 | ≤ 32.99 |
| 4950.0 | QPSK | 12 M | 22.70 | 0.186 | 21.99 | 0.158 | 25.37 | 0.344 | ≤ 32.99 |
| 4965.0 | | | 22.70 | 0.186 | 22.42 | 0.175 | 25.57 | 0.361 | ≤ 32.99 |
| 4980.0 | | | 22.86 | 0.193 | 22.39 | 0.173 | 25.64 | 0.366 | ≤ 32.99 |
| 4950.0 | | 18 M | 22.68 | 0.185 | 22.07 | 0.161 | 25.40 | 0.347 | ≤ 32.99 |
| 4965.0 | | | 22.74 | 0.188 | 22.39 | 0.173 | 25.58 | 0.361 | ≤ 32.99 |
| 4980.0 | | | 22.89 | 0.195 | 22.30 | 0.170 | 25.62 | 0.365 | ≤ 32.99 |
| 4950.0 | 16QAM | 24 M | 22.54 | 0.179 | 22.17 | 0.165 | 25.37 | 0.344 | ≤ 32.99 |
| 4965.0 | | | 22.79 | 0.190 | 22.51 | 0.178 | 25.66 | 0.368 | ≤ 32.99 |
| 4980.0 | | | 22.95 | 0.197 | 22.35 | 0.172 | 25.67 | 0.369 | ≤ 32.99 |
| 4950.0 | | 36 M | 22.78 | 0.190 | 21.90 | 0.155 | 25.37 | 0.344 | ≤ 32.99 |
| 4965.0 | | | 22.72 | 0.187 | 22.47 | 0.177 | 25.61 | 0.364 | ≤ 32.99 |
| 4980.0 | | | 22.84 | 0.192 | 22.17 | 0.165 | 25.53 | 0.357 | ≤ 32.99 |
| 4950.0 | 64QAM | 48 M | 22.71 | 0.187 | 21.95 | 0.157 | 25.36 | 0.344 | ≤ 32.99 |
| 4965.0 | | | 22.78 | 0.190 | 22.42 | 0.175 | 25.61 | 0.364 | ≤ 32.99 |
| 4980.0 | | | 22.88 | 0.194 | 22.21 | 0.166 | 25.57 | 0.361 | ≤ 32.99 |
| 4950.0 | | 54 M | 22.69 | 0.186 | 21.95 | 0.157 | 25.35 | 0.343 | ≤ 32.99 |
| 4965.0 | | | 22.75 | 0.188 | 22.35 | 0.172 | 25.56 | 0.360 | ≤ 32.99 |
| 4980.0 | | | 22.99 | 0.199 | 22.26 | 0.168 | 25.65 | 0.367 | ≤ 32.99 |

Note 1: The conducted power testing result was used average detector.

Note 2: The relevant measured result has the offset with cable loss already.

| Test Mode | Mode 10: MIMO_5 MHz Continuous TX mode | | | | | | | | |
|---|---|---|---|---|---|---|---|---|---|
| Frequency (MHz) | Modulation | Data Rate | ANT-0 | | ANT-1 | | ANT-0+1 | | Limit (dBm) |
| | | | Max. Output Power | | | | | | |
| | | | (dBm) | (W) | (dBm) | (W) | (dBm) | (W) | |
| 4942.5 | BPSK | MSC8 | 23.23 | 0.210 | 22.98 | 0.199 | **26.12** | **0.409** | ≤ 26.99 |
| 4967.5 | | | 23.10 | 0.204 | 22.35 | 0.172 | 25.75 | 0.376 | ≤ 26.99 |
| 4987.5 | | | 22.81 | 0.191 | 22.40 | 0.174 | 25.62 | 0.365 | ≤ 26.99 |
| 4942.5 | QPSK | MSC9 | 23.04 | 0.201 | 22.76 | 0.189 | 25.91 | 0.390 | ≤ 26.99 |
| 4967.5 | | | 22.92 | 0.196 | 22.17 | 0.165 | 25.57 | 0.361 | ≤ 26.99 |
| 4987.5 | | | 22.64 | 0.184 | 22.21 | 0.166 | 25.44 | 0.350 | ≤ 26.99 |
| 4942.5 | | MSC10 | 22.91 | 0.195 | 22.68 | 0.185 | 25.81 | 0.381 | ≤ 26.99 |
| 4967.5 | | | 22.73 | 0.187 | 22.06 | 0.161 | 25.42 | 0.348 | ≤ 26.99 |
| 4987.5 | | | 22.46 | 0.176 | 22.13 | 0.163 | 25.31 | 0.340 | ≤ 26.99 |
| 4942.5 | 16QAM | MSC11 | 22.86 | 0.193 | 22.54 | 0.179 | 25.71 | 0.372 | ≤ 26.99 |
| 4967.5 | | | 22.71 | 0.187 | 21.99 | 0.158 | 25.38 | 0.345 | ≤ 26.99 |
| 4987.5 | | | 22.42 | 0.175 | 22.03 | 0.160 | 25.24 | 0.334 | ≤ 26.99 |
| 4942.5 | | MSC12 | 22.77 | 0.189 | 22.53 | 0.179 | 25.66 | 0.368 | ≤ 26.99 |
| 4967.5 | | | 22.73 | 0.187 | 21.92 | 0.156 | 25.35 | 0.343 | ≤ 26.99 |
| 4987.5 | | | 22.35 | 0.172 | 22.00 | 0.158 | 25.19 | 0.330 | ≤ 26.99 |
| 4942.5 | 64QAM | MSC13 | 22.79 | 0.190 | 22.58 | 0.181 | 25.70 | 0.372 | ≤ 26.99 |
| 4967.5 | | | 22.71 | 0.187 | 21.88 | 0.154 | 25.33 | 0.341 | ≤ 26.99 |
| 4987.5 | | | 22.36 | 0.172 | 21.98 | 0.158 | 25.18 | 0.330 | ≤ 26.99 |
| 4942.5 | | MSC15 | 22.81 | 0.191 | 22.53 | 0.179 | 25.68 | 0.370 | ≤ 26.99 |
| 4967.5 | | | 22.72 | 0.187 | 21.95 | 0.157 | 25.36 | 0.344 | ≤ 26.99 |
| 4987.5 | | | 22.36 | 0.172 | 21.96 | 0.157 | 25.17 | 0.329 | ≤ 26.99 |

Note 1: The conducted power testing result was used average detector.

Note 2: The relevant measured result has the offset with cable loss already.

| Test Mode | Mode 11: MIMO_10 MHz Continuous TX mode | | | | | | | | |
|---|---|---|---|---|---|---|---|---|---|
| Frequency (MHz) | Modulation | Data Rate | ANT-0 | | ANT-1 | | ANT-0+1 | | Limit (dBm) |
| | | | Max. Output Power | | | | | | |
| | | | (dBm) | (W) | (dBm) | (W) | (dBm) | (W) | |
| 4945.0 | BPSK | MSC8 | 22.72 | 0.187 | 22.42 | 0.175 | 25.58 | 0.361 | ≤ 29.99 |
| 4965.0 | | | 22.94 | 0.197 | 22.64 | 0.184 | **25.80** | **0.380** | ≤ 29.99 |
| 4985.0 | | | 22.80 | 0.191 | 22.35 | 0.172 | 25.59 | 0.362 | ≤ 29.99 |
| 4945.0 | QPSK | MSC9 | 22.53 | 0.179 | 22.27 | 0.169 | 25.41 | 0.348 | ≤ 29.99 |
| 4965.0 | | | 22.81 | 0.191 | 22.48 | 0.177 | 25.66 | 0.368 | ≤ 29.99 |
| 4985.0 | | | 22.62 | 0.183 | 22.16 | 0.164 | 25.41 | 0.348 | ≤ 29.99 |
| 4945.0 | | MSC10 | 22.43 | 0.175 | 22.06 | 0.161 | 25.26 | 0.336 | ≤ 29.99 |
| 4965.0 | | | 22.60 | 0.182 | 22.32 | 0.171 | 25.47 | 0.352 | ≤ 29.99 |
| 4985.0 | | | 22.46 | 0.176 | 21.99 | 0.158 | 25.24 | 0.334 | ≤ 29.99 |
| 4945.0 | 16QAM | MSC11 | 22.33 | 0.171 | 22.00 | 0.158 | 25.18 | 0.330 | ≤ 29.99 |
| 4965.0 | | | 22.51 | 0.178 | 22.22 | 0.167 | 25.38 | 0.345 | ≤ 29.99 |
| 4985.0 | | | 22.37 | 0.173 | 21.94 | 0.156 | 25.17 | 0.329 | ≤ 29.99 |
| 4945.0 | | MSC12 | 22.27 | 0.169 | 22.00 | 0.158 | 25.15 | 0.327 | ≤ 29.99 |
| 4965.0 | | | 22.49 | 0.177 | 22.24 | 0.167 | 25.38 | 0.345 | ≤ 29.99 |
| 4985.0 | | | 22.39 | 0.173 | 21.90 | 0.155 | 25.16 | 0.328 | ≤ 29.99 |
| 4945.0 | 64QAM | MSC13 | 22.31 | 0.170 | 22.00 | 0.158 | 25.17 | 0.329 | ≤ 29.99 |
| 4965.0 | | | 22.51 | 0.178 | 22.20 | 0.166 | 25.37 | 0.344 | ≤ 29.99 |
| 4985.0 | | | 22.38 | 0.173 | 21.92 | 0.156 | 25.17 | 0.329 | ≤ 29.99 |
| 4945.0 | | MSC15 | 22.35 | 0.172 | 21.96 | 0.157 | 25.17 | 0.329 | ≤ 29.99 |
| 4965.0 | | | 22.53 | 0.179 | 22.22 | 0.167 | 25.39 | 0.346 | ≤ 29.99 |
| 4985.0 | | | 22.43 | 0.175 | 21.89 | 0.155 | 25.18 | 0.330 | ≤ 29.99 |

Note 1: The conducted power testing result was used average detector.

Note 2: The relevant measured result has the offset with cable loss already.

| Test Mode | Mode 12: MIMO_20 MHz Continuous TX mode | | | | | | | | |
|---|---|---|---|---|---|---|---|---|---|
| Frequency (MHz) | Modulation | Data Rate | ANT-0 | | ANT-1 | | ANT-0+1 | | Limit (dBm) |
| | | | Max. Output Power | | | | | | |
| | | | (dBm) | (W) | (dBm) | (W) | (dBm) | (W) | |
| 4950.0 | BPSK | MSC8 | 22.91 | 0.195 | 22.22 | 0.167 | 25.59 | 0.362 | ≤ 32.99 |
| 4965.0 | | | 23.02 | 0.200 | 22.69 | 0.186 | **25.87** | **0.386** | ≤ 32.99 |
| 4980.0 | | | 22.18 | 0.165 | 21.92 | 0.156 | 25.06 | 0.321 | ≤ 32.99 |
| 4950.0 | QPSK | MSC9 | 22.79 | 0.190 | 21.98 | 0.158 | 25.41 | 0.348 | ≤ 32.99 |
| 4965.0 | | | 22.82 | 0.191 | 22.38 | 0.173 | 25.62 | 0.365 | ≤ 32.99 |
| 4980.0 | | | 22.02 | 0.159 | 21.63 | 0.146 | 24.84 | 0.305 | ≤ 32.99 |
| 4950.0 | | MSC10 | 22.62 | 0.183 | 21.86 | 0.153 | 25.27 | 0.337 | ≤ 32.99 |
| 4965.0 | | | 22.76 | 0.189 | 22.34 | 0.171 | 25.57 | 0.361 | ≤ 32.99 |
| 4980.0 | | | 22.12 | 0.163 | 21.55 | 0.143 | 24.85 | 0.305 | ≤ 32.99 |
| 4950.0 | 16QAM | MSC11 | 22.80 | 0.191 | 22.03 | 0.160 | 25.44 | 0.350 | ≤ 32.99 |
| 4965.0 | | | 22.83 | 0.192 | 22.53 | 0.179 | 25.69 | 0.371 | ≤ 32.99 |
| 4980.0 | | | 22.09 | 0.162 | 21.67 | 0.147 | 24.90 | 0.309 | ≤ 32.99 |
| 4950.0 | | MSC12 | 22.75 | 0.188 | 22.15 | 0.164 | 25.47 | 0.352 | ≤ 32.99 |
| 4965.0 | | | 22.81 | 0.191 | 22.47 | 0.177 | 25.65 | 0.367 | ≤ 32.99 |
| 4980.0 | | | 21.90 | 0.155 | 21.63 | 0.146 | 24.78 | 0.301 | ≤ 32.99 |
| 4950.0 | 64QAM | MSC13 | 22.78 | 0.190 | 21.92 | 0.156 | 25.38 | 0.345 | ≤ 32.99 |
| 4965.0 | | | 22.83 | 0.192 | 22.46 | 0.176 | 25.66 | 0.368 | ≤ 32.99 |
| 4980.0 | | | 21.87 | 0.154 | 21.86 | 0.153 | 24.88 | 0.308 | ≤ 32.99 |
| 4950.0 | | MSC15 | 22.68 | 0.185 | 21.97 | 0.157 | 25.35 | 0.343 | ≤ 32.99 |
| 4965.0 | | | 22.71 | 0.187 | 22.59 | 0.182 | 25.66 | 0.368 | ≤ 32.99 |
| 4980.0 | | | 21.98 | 0.158 | 21.87 | 0.154 | 24.94 | 0.312 | ≤ 32.99 |

Note 1: The conducted power testing result was used average detector.

Note 2: The relevant measured result has the offset with cable loss already.

## 3.2. Power Spectral Density

| Test Mode | Frequency (MHz) | ANT-0 | | | Limit |
|---|---|---|---|---|---|
| | | Measurement (dBm/MHz) | Duty Factor (dB) | Calculated (dBm/MHz) | (dBm/MHz) |
| Mode 1 | 4942.5 | 18.418 | 0.011 | 18.429 | ≤ 21.00 |
| | 4967.5 | 18.553 | 0.011 | 18.564 | ≤ 21.00 |
| | 4987.5 | 19.334 | 0.011 | 19.345 | ≤ 21.00 |
| Mode 2 | 4945.0 | 15.521 | 0.011 | 15.532 | ≤ 21.00 |
| | 4965.0 | 15.965 | 0.011 | 15.976 | ≤ 21.00 |
| | 4985.0 | 16.095 | 0.011 | 16.106 | ≤ 21.00 |
| Mode 3 | 4950.0 | 13.029 | 0.039 | 13.068 | ≤ 21.00 |
| | 4965.0 | 13.322 | 0.039 | 13.361 | ≤ 21.00 |
| | 4980.0 | 13.337 | 0.039 | 13.376 | ≤ 21.00 |
| Mode 4 | 4942.5 | 18.445 | 0.011 | 18.456 | ≤ 21.00 |
| | 4967.5 | 18.600 | 0.011 | 18.611 | ≤ 21.00 |
| | 4987.5 | 18.015 | 0.011 | 18.026 | ≤ 21.00 |
| Mode 5 | 4945.0 | 15.547 | 0.013 | 15.560 | ≤ 21.00 |
| | 4965.0 | 15.393 | 0.013 | 15.406 | ≤ 21.00 |
| | 4985.0 | 15.474 | 0.013 | 15.487 | ≤ 21.00 |
| Mode 6 | 4950.0 | 12.435 | 0.070 | 12.505 | ≤ 21.00 |
| | 4965.0 | 12.890 | 0.070 | 12.960 | ≤ 21.00 |
| | 4980.0 | 12.674 | 0.070 | 12.744 | ≤ 21.00 |

Note: Method SA-2, Power density = measured result + 10 log(1/duty cycle) = measured result + duty factor.

| Test Mode | Frequency (MHz) | ANT-0 | | | ANT-1 | | | ANT-0+1 | Limit |
|---|---|---|---|---|---|---|---|---|---|
| | | Measurement (dBm/MHz) | Duty Factor (dB) | Calculated (dBm/MHz) | Measurement (dBm/MHz) | Duty Factor (dB) | Calculated (dBm/MHz) | Measurement (dBm/MHz) | (dBm/MHz) |
| Mode 7 | 4942.5 | 17.918 | 0.011 | 17.929 | 17.781 | 0.011 | 17.792 | 20.872 | ≤ 20.99 |
| | 4967.5 | 17.902 | 0.011 | 17.913 | 17.711 | 0.011 | 17.722 | 20.829 | ≤ 20.99 |
| | 4987.5 | 18.045 | 0.011 | 18.056 | 17.719 | 0.011 | 17.730 | 20.907 | ≤ 20.99 |
| Mode 8 | 4945.0 | 15.836 | 0.011 | 15.847 | 15.461 | 0.011 | 15.472 | 18.673 | ≤ 20.99 |
| | 4965.0 | 15.865 | 0.011 | 15.876 | 15.574 | 0.011 | 15.585 | 18.743 | ≤ 20.99 |
| | 4985.0 | 16.132 | 0.011 | 16.143 | 15.843 | 0.011 | 15.854 | 19.011 | ≤ 20.99 |
| Mode 9 | 4950.0 | 12.272 | 0.053 | 12.325 | 11.754 | 0.053 | 11.807 | 15.084 | ≤ 20.99 |
| | 4965.0 | 12.792 | 0.053 | 12.845 | 12.412 | 0.053 | 12.465 | 15.669 | ≤ 20.99 |
| | 4980.0 | 12.960 | 0.053 | 13.013 | 12.721 | 0.053 | 12.774 | 15.905 | ≤ 20.99 |
| Mode 10 | 4942.5 | 17.585 | 0.011 | 17.596 | 17.222 | 0.011 | 17.233 | 20.428 | ≤ 20.99 |
| | 4967.5 | 17.738 | 0.011 | 17.749 | 17.054 | 0.011 | 17.065 | 20.430 | ≤ 20.99 |
| | 4987.5 | 17.761 | 0.011 | 17.772 | 17.159 | 0.011 | 17.170 | 20.491 | ≤ 20.99 |
| Mode 11 | 4945.0 | 14.723 | 0.013 | 14.736 | 14.544 | 0.013 | 14.557 | 17.658 | ≤ 20.99 |
| | 4965.0 | 15.328 | 0.013 | 15.341 | 14.993 | 0.013 | 15.006 | 18.187 | ≤ 20.99 |
| | 4985.0 | 15.047 | 0.013 | 15.060 | 14.990 | 0.013 | 15.003 | 18.042 | ≤ 20.99 |
| Mode 12 | 4950.0 | 12.358 | 0.070 | 12.428 | 11.765 | 0.070 | 11.835 | 15.152 | ≤ 20.99 |
| | 4965.0 | 12.570 | 0.070 | 12.640 | 12.081 | 0.070 | 12.151 | 15.413 | ≤ 20.99 |
| | 4980.0 | 11.767 | 0.070 | 11.837 | 11.638 | 0.070 | 11.708 | 14.783 | ≤ 20.99 |

Note: Method SA-2, Power density = measured result + 10 log(1/duty cycle) = measured result + duty factor.

■ **Test Graphs**

| Mode 1: SISO_5 MHz Continuous TX mode (Legacy) _ANT-0 | | | |
|---|---|---|---|
| 4942.5 MHz | | | |
| 4967.5 MHz | | 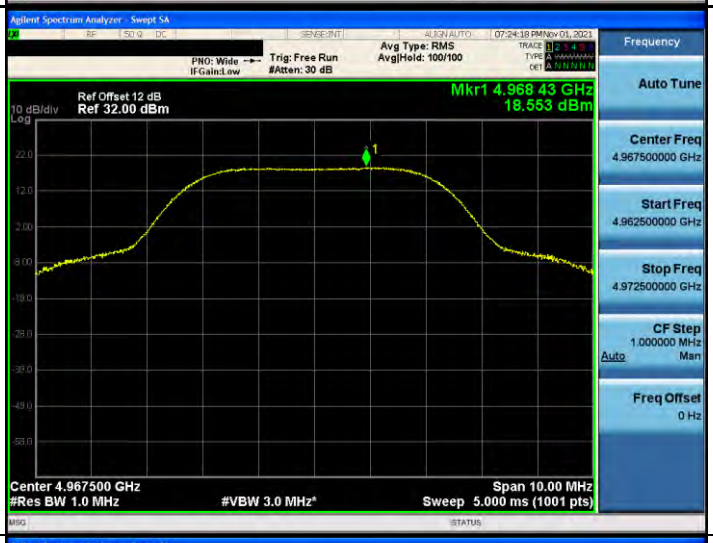 | |
| 4987.5 MHz | | | |

| Mode 2: SISO_10 MHz Continuous TX mode (Legacy) _ANT-0 | | | |
|---|---|---|---|
| 4945 MHz | | | |
| 4965 MHz | | | |
| 4985 MHz | | | |

| Mode 3: SISO_20 MHz Continuous TX mode (Legacy) _ANT-0 | | | |
|---|---|---|---|
| 4950 MHz | | 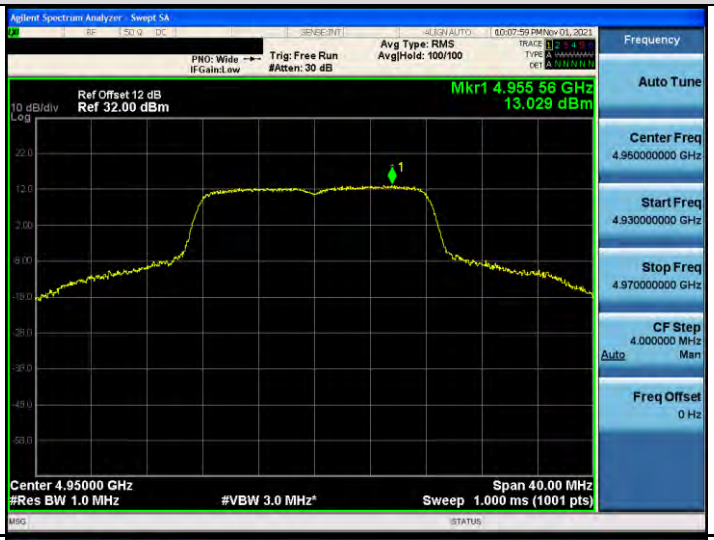 | |
| 4965 MHz | | | |
| 4980 MHz | | | |

| Mode 4: SISO_5 MHz Continuous TX mode_ANT-0 | | | |
|---|---|---|---|
| 4942.5 MHz | | | |
| 4967.5 MHz | | | |
| 4987.5 MHz | | 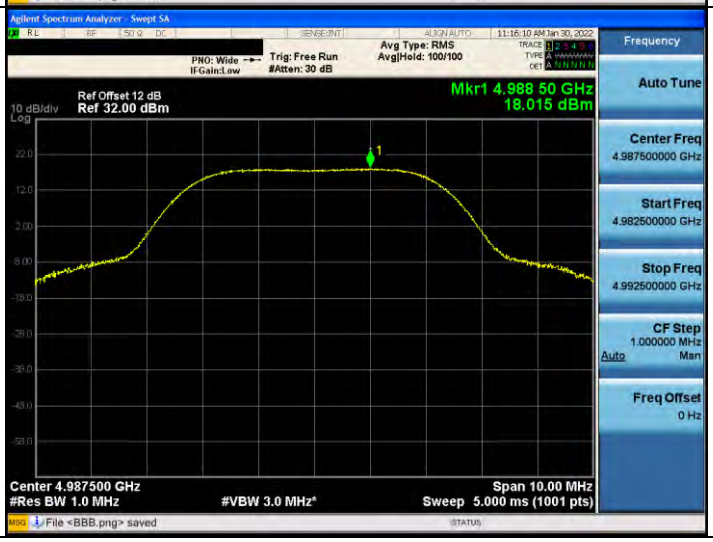 | |

| Mode 5: SISO_10 MHz Continuous TX mode_ANT-0 | | | |
|---|---|---|---|
| 4945 MHz | | 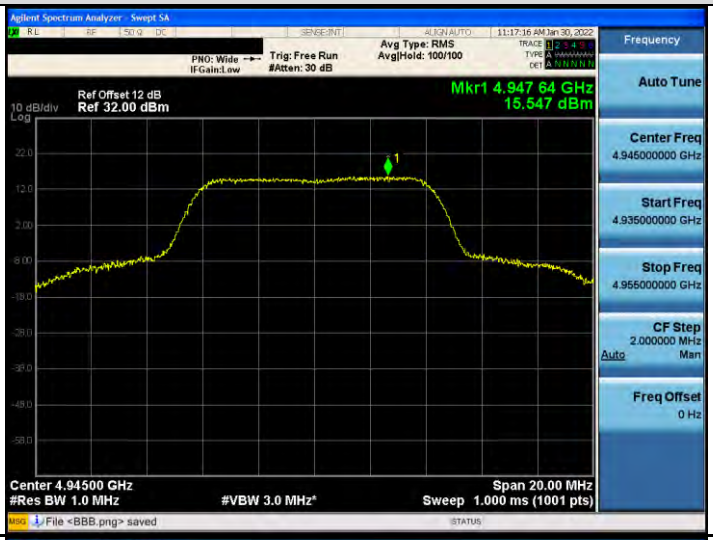 | |
| 4965 MHz | | 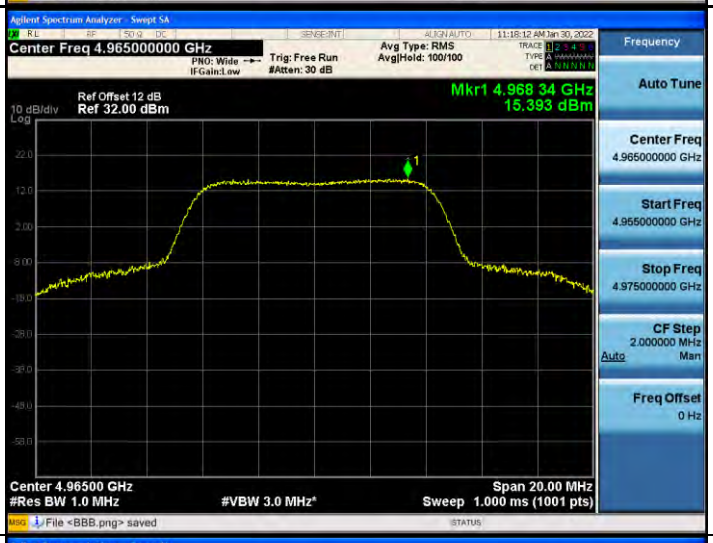 | |
| 4985 MHz | | 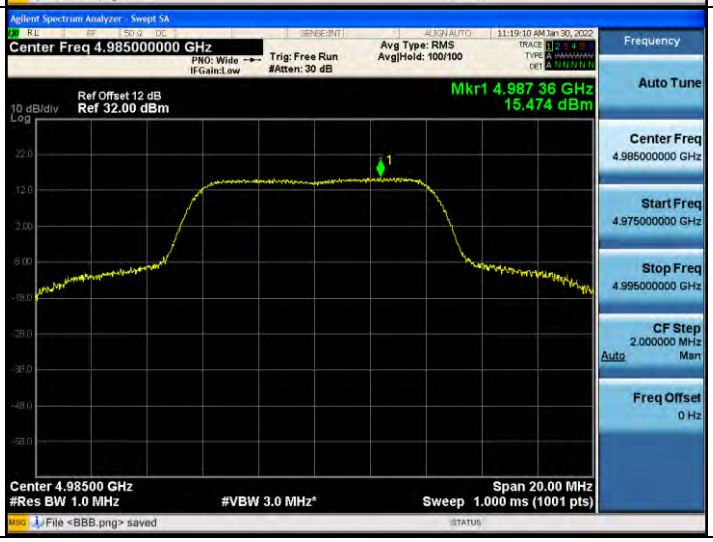 | |

| Mode 6: SISO_20 MHz Continuous TX mode_ANT-0 | | | |
|---|---|---|---|
| 4950 MHz | | | |
| 4965 MHz | | | |
| 4980 MHz | | 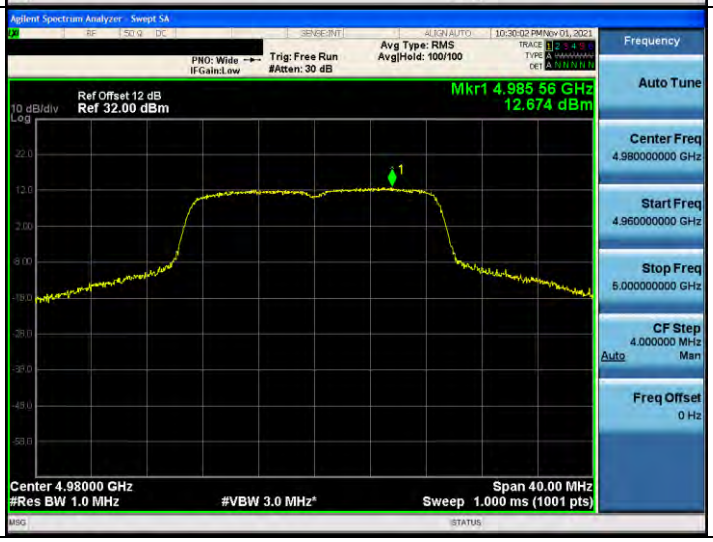 | |

| Mode 7: MIMO_5 MHz Continuous TX mode (Legacy) _ANT-0 | | | |
|---|---|---|---|
| 4942.5 MHz | | | |
| 4967.5 MHz | | | |
| 4987.5 MHz | | | |

| Mode 8: MIMO_10 MHz Continuous TX mode (Legacy) _ANT-0 | | | |
|---|---|---|---|
| 4945 MHz | | | |
| 4965 MHz | | | |
| 4985 MHz | | | |

| Mode 9: MIMO_20 MHz Continuous TX mode (Legacy) _ANT-0 | | | |
|---|---|---|---|
| 4950 MHz | | | |
| 4965 MHz | | 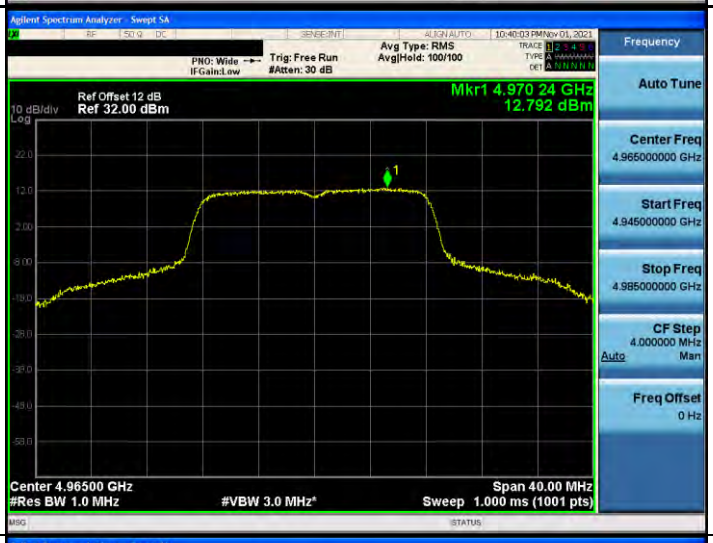 | |
| 4980 MHz | | 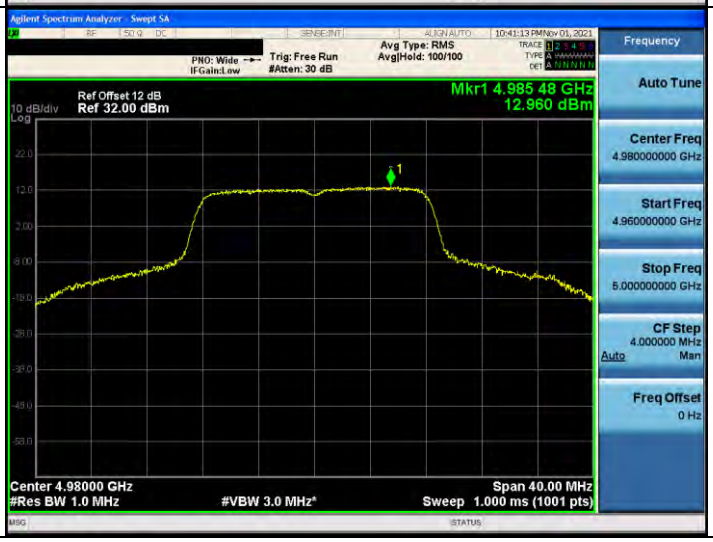 | |

| Mode 10: MIMO_5 MHz Continuous TX mode_ANT-0 | | | |
|---|---|---|---|
| 4942.5 MHz | | | |
| 4967.5 MHz | | | |
| 4987.5 MHz | | | |

| Mode 11: MIMO_10 MHz Continuous TX mode_ANT-0 | | | |
|---|---|---|---|
| 4945 MHz | | | |
| 4965 MHz | | | |
| 4985 MHz | | | |

| Mode 12: MIMO_20 MHz Continuous TX mode_ANT-0 | | | |
|---|---|---|---|
| 4950 MHz | | | |
| 4965 MHz | | | |
| 4980 MHz | | | |

| Mode 7: MIMO_5 MHz Continuous TX mode (Legacy) _ANT-1 | | | |
|---|---|---|---|
| 4942.5 MHz | | | |
| 4967.5 MHz | | 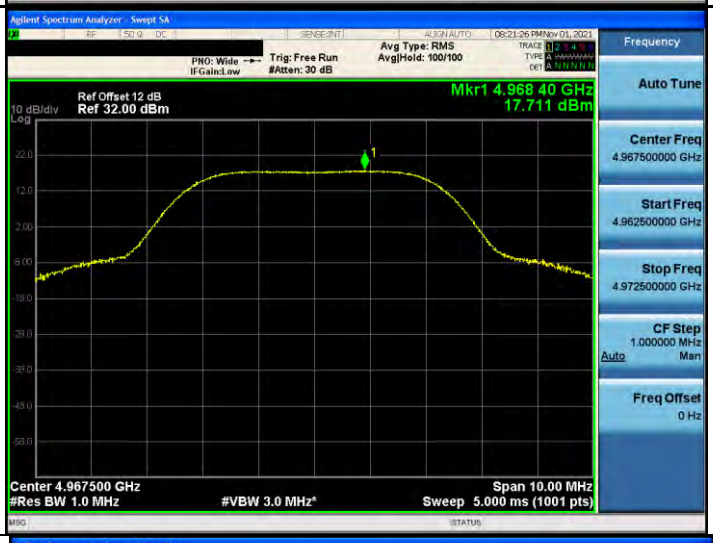 | |
| 4987.5 MHz | | | |

| Mode 8: MIMO_10 MHz Continuous TX mode (Legacy) _ANT-1 | | | |
|---|---|---|---|
| 4945 MHz | | | |
| 4965 MHz | | | |
| 4985 MHz | | | |

| Mode 9: MIMO_20 MHz Continuous TX mode (Legacy) _ANT-1 | | | |
|---|---|---|---|
| 4950 MHz | | 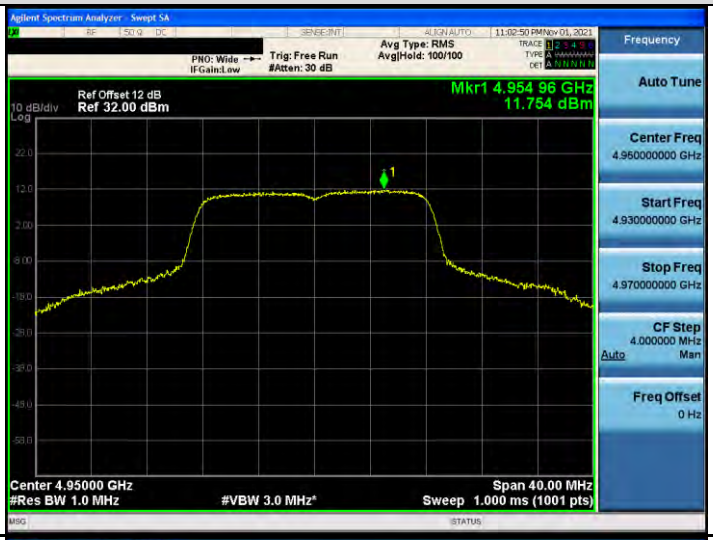 | |
| 4965 MHz | | | |
| 4980 MHz | | | |

| Mode 10: MIMO_5 MHz Continuous TX mode_ANT-1 | | | |
|---|---|---|---|
| 4942.5 MHz | | 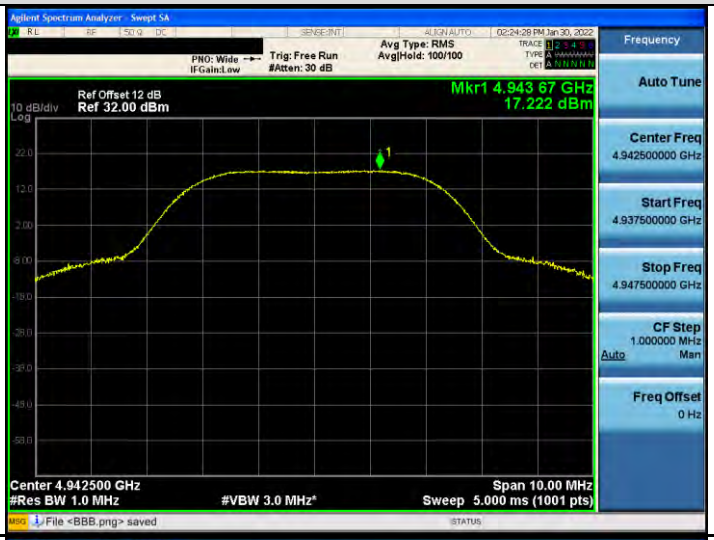 | |
| 4967.5 MHz | | | |
| 4987.5 MHz | | | |

| Mode 11: MIMO_10 MHz Continuous TX mode_ANT-1 | | | |
|---|---|---|---|
| 4945 MHz | | 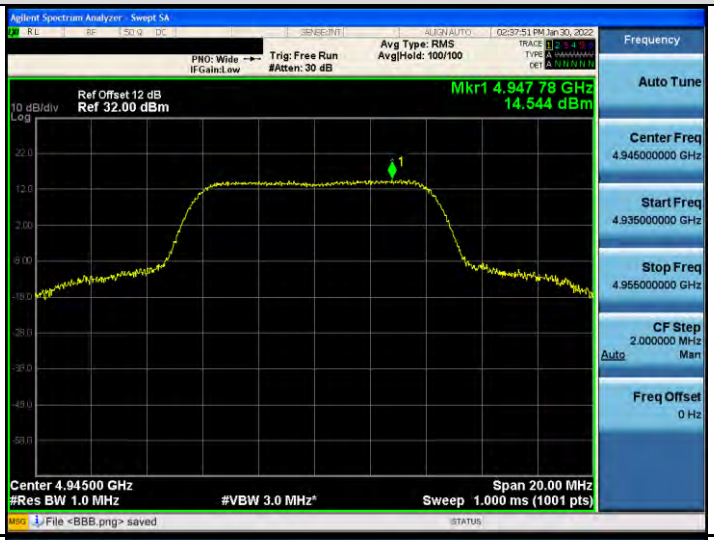 | |
| 4965 MHz | | | |
| 4985 MHz | | | |

| Mode 12: MIMO_20 MHz Continuous TX mode_ANT-1 | | | |
|---|---|---|---|
| 4950 MHz | | | |
| 4965 MHz | | | |
| 4980 MHz | | 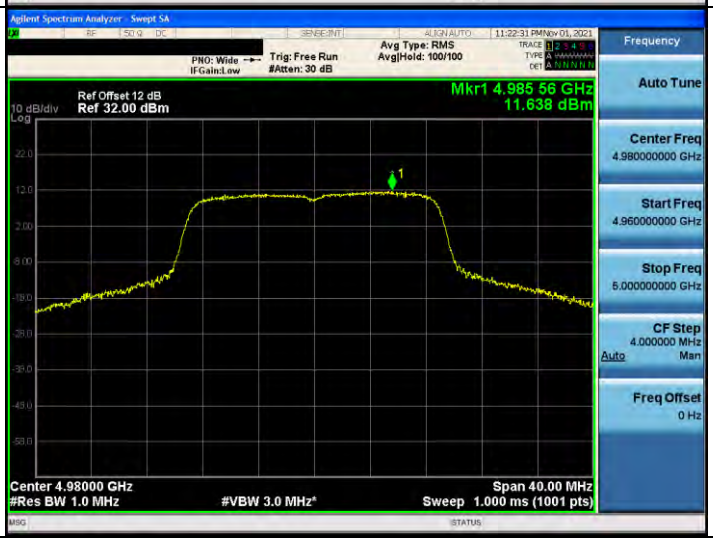 | |

## 3.3. Emission Bandwidth & Occupied Bandwidth

| Test Mode | Frequency (MHz) | 26 dB RF Bandwidth | 99 % Occupied Bandwidth |
|---|---|---|---|
| | | ANT-0 (MHz) | ANT-0 (MHz) |
| Mode 1 | 4942.5 | 8.483 | 4.352 |
| | 4967.5 | 9.431 | 4.527 |
| | 4987.5 | 9.045 | 4.308 |
| Mode 2 | 4945.0 | 18.810 | 9.428 |
| | 4965.0 | 19.110 | 8.728 |
| | 4985.0 | 18.590 | 8.670 |
| Mode 3 | 4950.0 | 35.830 | 18.869 |
| | 4965.0 | 34.070 | 18.891 |
| | 4980.0 | 33.910 | 18.629 |
| Mode 4 | 4942.5 | 8.582 | 4.618 |
| | 4967.5 | 9.589 | 4.688 |
| | 4987.5 | 7.589 | 4.602 |
| Mode 5 | 4945.0 | 17.590 | 9.311 |
| | 4965.0 | 16.740 | 9.387 |
| | 4985.0 | 16.560 | 8.993 |
| Mode 6 | 4950.0 | 36.180 | 18.908 |
| | 4965.0 | 33.450 | 18.384 |
| | 4980.0 | 33.670 | 18.603 |

| Test Mode | Frequency (MHz) | 26 dB RF Bandwidth | | 99 % Occupied Bandwidth | |
|---|---|---|---|---|---|
| | | ANT-0 (MHz) | ANT-1 (MHz) | ANT-0 (MHz) | ANT-1 (MHz) |
| Mode 7 | 4942.5 | 9.488 | 9.236 | 4.667 | 4.955 |
| | 4967.5 | 9.454 | 8.531 | 4.828 | 4.430 |
| | 4987.5 | 8.978 | 8.587 | 4.689 | 4.468 |
| Mode 8 | 4945.0 | 19.120 | 17.100 | 9.475 | 9.889 |
| | 4965.0 | 19.060 | 18.410 | 9.424 | 9.238 |
| | 4985.0 | 16.460 | 18.590 | 8.755 | 8.930 |
| Mode 9 | 4950.0 | 34.040 | 31.520 | 18.623 | 17.833 |
| | 4965.0 | 35.840 | 33.210 | 18.519 | 18.760 |
| | 4980.0 | 32.590 | 32.390 | 18.524 | 18.334 |
| Mode 10 | 4942.5 | 8.959 | 8.918 | 4.653 | 4.377 |
| | 4967.5 | 9.097 | 8.578 | 4.493 | 4.307 |
| | 4987.5 | 8.266 | 8.092 | 4.417 | 4.281 |
| Mode 11 | 4945.0 | 16.520 | 18.540 | 8.975 | 8.711 |
| | 4965.0 | 18.510 | 17.280 | 9.410 | 8.939 |
| | 4985.0 | 17.610 | 17.590 | 8.764 | 8.666 |
| Mode 12 | 4950.0 | 36.630 | 36.250 | 18.773 | 18.977 |
| | 4965.0 | 38.430 | 38.960 | 18.960 | 19.064 |
| | 4980.0 | 35.830 | 31.200 | 18.451 | 18.200 |

■ **Test Graphs**

| Mode 1: SISO_5 MHz Continuous TX mode (Legacy) _ANT-0 | | | |
|---|---|---|---|
| 4942.5 MHz | | | |
| 4967.5 MHz | | | |
| 4987.5 MHz | | | |

| Mode 2: SISO_10 MHz Continuous TX mode (Legacy) _ANT-0 | | | |
|---|---|---|---|
| 4945 MHz | | | |
| 4965 MHz | | | |
| 4985 MHz | | | |

| Mode 3: SISO_20 MHz Continuous TX mode (Legacy) _ANT-0 | | | |
|---|---|---|---|
| 4950 MHz | | | |
| 4965 MHz | | | |
| 4980 MHz | | | |

| Mode 4: SISO_5 MHz Continuous TX mode_ANT-0 | | | |
|---|---|---|---|
| 4942.5 MHz | | | |
| 4967.5 MHz | | | |
| 4987.5 MHz | | | |

| Mode 5: SISO_10 MHz Continuous TX mode_ANT-0 | | | |
|---|---|---|---|
| 4945 MHz | | | |
| 4965 MHz | | | |
| 4985 MHz | | | |

| Mode 6: SISO_20 MHz Continuous TX mode_ANT-0 | | | |
|---|---|---|---|
| 4950 MHz | | | |
| 4965 MHz | | | |
| 4980 MHz | | | |

| Mode 7: MIMO_5 MHz Continuous TX mode (Legacy) _ANT-0 | | | |
|---|---|---|---|
| 4942.5 MHz | | | |
| 4967.5 MHz | | | |
| 4987.5 MHz | | | |

| Mode 8: MIMO_10 MHz Continuous TX mode (Legacy) _ANT-0 | | | |
|---|---|---|---|
| 4945 MHz | | | |
| 4965 MHz | | | |
| 4985 MHz | | | |

| Mode 9: MIMO_20 MHz Continuous TX mode (Legacy) _ANT-0 | | | |
|---|---|---|---|
| 4950 MHz | | | |
| 4965 MHz | | | |
| 4980 MHz | | | |

| Mode 10: MIMO_5 MHz Continuous TX mode_ANT-0 | | | |
|---|---|---|---|
| 4942.5 MHz | | | |
| 4967.5 MHz | | | |
| 4987.5 MHz | | | |

| Mode 11: MIMO_10 MHz Continuous TX mode_ANT-0 | | | |
|---|---|---|---|
| 4945 MHz | | | |
| 4965 MHz | | | |
| 4985 MHz | | | |

| Mode 12: MIMO_20 MHz Continuous TX mode_ANT-0 | | | |
|---|---|---|---|
| 4950 MHz | | | |
| 4965 MHz | | | |
| 4980 MHz | | | |

| Mode 7: MIMO_5 MHz Continuous TX mode (Legacy) _ANT-1 | | | |
|---|---|---|---|
| 4942.5 MHz | | | |
| 4967.5 MHz | | | |
| 4987.5 MHz | | | |

| Mode 8: MIMO_10 MHz Continuous TX mode (Legacy) _ANT-1 | | | |
|---|---|---|---|
| 4945 MHz | | | |
| 4965 MHz | | | |
| 4985 MHz | | | |

| Mode 9: MIMO_20 MHz Continuous TX mode (Legacy) _ANT-1 | | | |
|---|---|---|---|
| 4950 MHz | | | |
| 4965 MHz | | | |
| 4980 MHz | | | |

| Mode 10: MIMO_5 MHz Continuous TX mode_ANT-1 | | | |
|---|---|---|---|
| 4942.5 MHz | | | |
| 4967.5 MHz | | | |
| 4987.5 MHz | | | |

| Mode 11: MIMO_10 MHz Continuous TX mode_ANT-1 | | | |
|---|---|---|---|
| 4945 MHz | | | |
| 4965 MHz | | | |
| 4985 MHz | | | |

| Mode 12: MIMO_20 MHz Continuous TX mode_ANT-1 | | |
|---|---|---|
| 4950 MHz | | |
| 4965 MHz | | |
| 4980 MHz | | |