Masimo Corporation

MightySat

Antenna Pattern Measurements

Report: MASI0928 Rev. 0, Issue Date: June 28, 2024

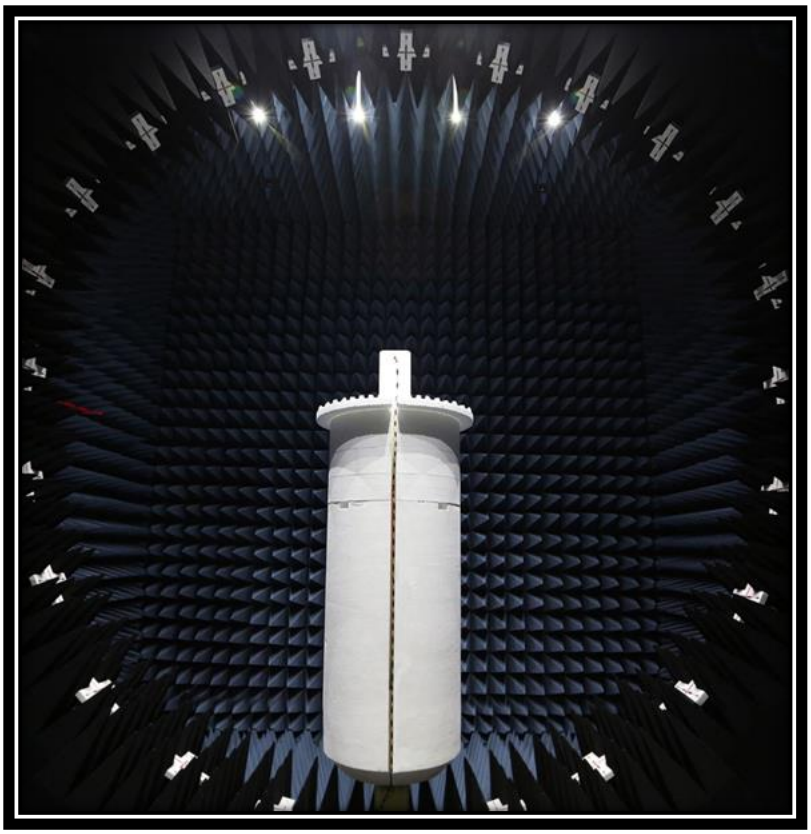

Approved by:

Johnny Candelas, Operations Manager

This report must not be used to claim product certification, approval, or endorsement by A2LA or any agency of the U.S. Government. This Report shall not be reproduced, except in full without written approval of the laboratory.

TABLE OF CONTENTS

Section	Page Number

Revision History 3
Accreditations.....4
Facilities 5
Product Description.....6
Configurations 8
Modifications 9
2D Antenna Pattern Measurements 10
End of Report.....23

REVISION HISTORY

Revision Number	Description	Date (yyyy-mm-dd)	Page Number
00	None		

ACCREDITATIONS AND AUTHORIZATIONS

United States

FCC - Designated by the FCC as a Telecommunications Certification Body (TCB). Certification chambers, Open Area Test Sites, and conducted measurement facilities are listed with the FCC.

A2LA - Each laboratory is accredited by A2LA to ISO / IEC 17025, and as a product certifier to ISO / IEC 17065 which allows Element to certify transmitters to FCC and IC specifications.

Canada

ISED - Recognized by Innovation, Science and Economic Development Canada as a Certification Body (CB) and as a CAB for the acceptance of test data.

European Union

European Commission – Recognized as an EU Notified Body validated for the EMCD and RED Directives.

United Kingdom

BEIS – Recognized by the UK as an Approved Body under the UK Radio Equipment and UK EMC Regulations.

Australia/New Zealand

ACMA - Recognized by ACMA as a CAB for the acceptance of test data.

Korea

MSIT / RRA - Recognized by KCC's RRA as a CAB for the acceptance of test data.

Japan

VCCI - Associate Member of the VCCI. Conducted and radiated measurement facilities are registered.

Taiwan

BSMI – Recognized by BSMI as a CAB for the acceptance of test data.

NCC - Recognized by NCC as a CAB for the acceptance of test data.

Singapore

IDA – Recognized by IDA as a CAB for the acceptance of test data.

Israel

MOC – Recognized by MOC as a CAB for the acceptance of test data.

Hong Kong

OFCA – Recognized by OFCA as a CAB for the acceptance of test data.

Vietnam

MIC – Recognized by MIC as a CAB for the acceptance of test data.

SCOPE

For details on the Scopes of our Accreditations, please visit:

California Minnesota Oregon Texas Washington

FACILITIES

Testing was performed at the following location(s)

	Location	Labs (1)	Address	A2LA (2)	ISED (3)	BSMI (4)	VCCI (5)	CAB (6)	FDA (7)
☒	California	OC01-17	41 Tesla Irvine, CA 92618 (949) 861-8918	3310.04	2834B	SL2-IN-E-1154R	A-0029	US0158	TL-55
☐	Minnesota	MN01-11	9349 W Broadway Ave. Brooklyn Park, MN 55445 (612) 638-5136	3310.05	2834E	SL2-IN-E-1152R	A-0109	US0175	TL-57
☐	Oregon	EV01-12	6775 NE Evergreen Pkwy #400 Hillsboro, OR 97124 (503) 844-4066	3310.02	2834D	SL2-IN-E-1017	A-0108	US0017	TL-56
☐	Texas	TX01-09	3801 E Plano Pkwy Plano, TX 75074 (469) 304-5255	3310.03	2834G	SL2-IN-E-1158R	A-0201	US0191	TL-54
☐	Washington	NC01-05	19201 120th Ave NE Bothell, WA 98011 (425) 984-6600	3310.06	2834F	SL2-IN-E-1153R	A-0110	US0157	TL-67
☐	Offsite	N/A	See Product Description	N/A	N/A	N/A	N/A	N/A	N/A

See data sheets for specific labs

(1) The lab designations denote individual rooms within each location. (OC01, OC02, OC03, etc.)
(2) A2LA Certificate No.
(3) ISED Company No.
(4) BSMI No.
(5) VCCI Site Filing No.
(6) CAB Identifier. Recognized Phase I CAB for ISED, ACMA, BSMI, IDA, KCC/RRA, MIC, MOC, NCC, OFCA
(7) FDA ASCA No.

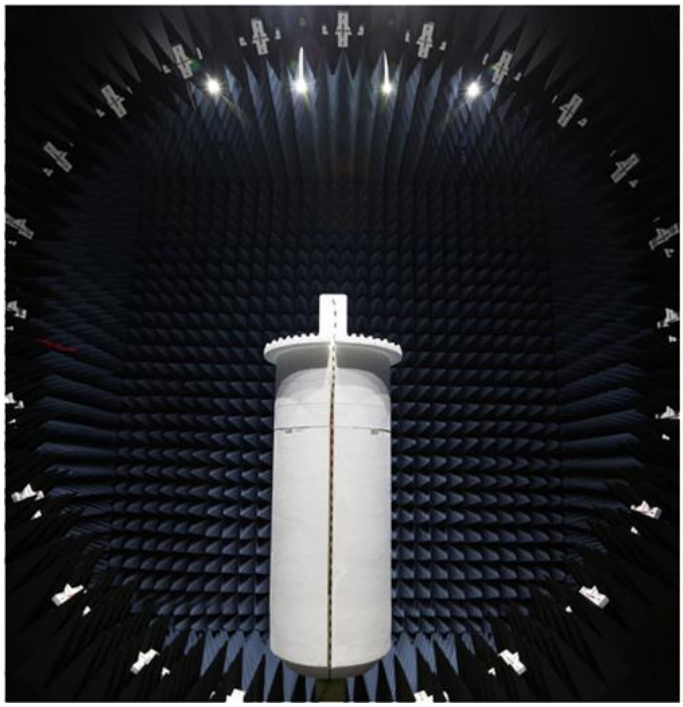

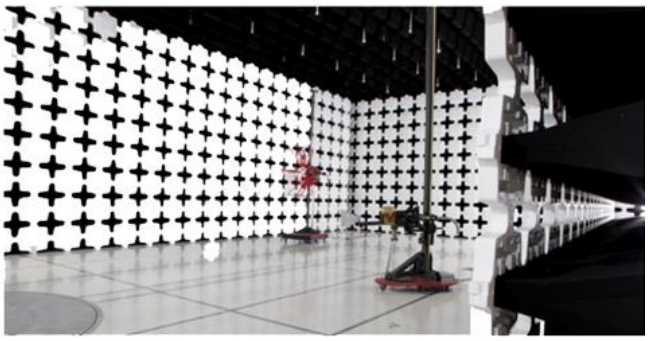

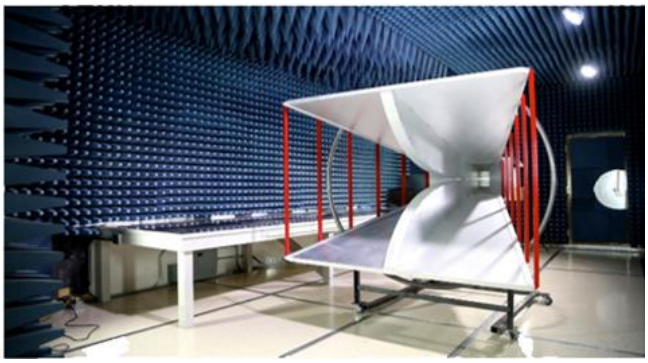

PRODUCT DESCRIPTION

Client and Equipment under Test (EUT) Information

Company Name:	Masimo Corporation
Address:	52 Discovery
City, State, Zip:	Irvine, CA 92618
Test Requested By:	Anami Joshi
EUT:	MightySat
First Date of Test:	May 1, 2024
Last Date of Test:	May 1, 2024
Receipt Date of Samples:	May 1, 2024
Equipment Design Stage:	Production
Equipment Condition:	No Damage
Purchase Authorization:	Verified

Information Provided by the Party Requesting the Test

Functional Description of the EUT:
SpO2 Finger patient monitor with Bluetooth LE Radio and one antenna

Highest Frequency Generated or used in the Device:
2480MHz

Testing Objective:
To obtain 2D antenna pattern measurements and calculated antenna performance values (Peak gain, 3dB Beamwidth, etc)

EUT Photo:

PRODUCT DESCRIPTION

CONFIGURATIONS

Configuration MASI0923-1

Software/Firmware Running During Test	
Description	**Version**
Radio Software	V1000

EUT			
Description	**Manufacturer**	**Model/Part Number**	**Serial Number**
MightySat	Masimo Corporation	29911	2404700001

MODIFICATIONS

Equipment Modifications

Item	Date	Test	Modification	Note	Disposition of EUT
1	2024-05-01	2D Antenna Pattern Measurements	Tested as delivered to test Station.	No EMI suppression devices were added or modified during this test.	Scheduled testing was completed.

2D ANTENNA PATTERN MEASUREMENTS

Macro Version

Testing was performed using the mode(s) of operation and configuration(s) noted within the report. The individuals and/or the organization requesting the test provided the modes, configurations and settings used to complete the evaluation. The actual test parameters are specified in the test data, this includes items such as investigated frequency range (scanned) and test levels. The testing methods and performance specifications, as well as the test site used for the evaluation are indicated in the test data. The test data represents the configuration / operating mode/ model that produced the highest emission levels as compared to the specification limit.

MODES OF OPERATION

Transmitting continuous wave at 2480 MHz. Reference antenna measured input power: -6.78 dBm.
Transmitting Bluetooth Low Energy: High Channel 2480 MHz
Transmitting Bluetooth Low Energy: Mid Channel 2440 MHz
Transmitting Bluetooth Low Energy: Low Channel 2402 MHz

POWER SETTINGS INVESTIGATED

Battery

CONFIGURATIONS INVESTIGATED

MASI0928 - 1

FREQUENCIES INVESTIGATED

Frequencies	2402 MHz, 2440 MHz, 2480 MHz

TEST EQUIPMENT

Description	Manufacturer	Model	ID	Last Cal.	Cal. Due
Cable	Micro-Coax	UFD150A-1-0720-200200	OCA	2023-12-29	2024-12-29
Generator - Signal	Keysight	N5182B	TFY	2023-12-20	2026-12-20
Antenna - Double Ridge	EMCO	3115	AHE	2022-09-01	2024-09-01
Amplifier - Pre-Amplifier	Cernex	CBL01084020-xx	PAX	2023-05-23	2024-05-23
Cable	Northwest EMC	1-8GHz RE Cables	OCJ	2023-05-23	2024-05-23
Antenna - Double Ridge	EMCO	3115	AHB	2024-04-16	2026-04-16

TEST DESCRIPTION

Measurements were performed in a semi-anechoic chamber at a 3 m distance. To simulate free space, the ground plane was covered with RF absorbing cones. The reference antenna and EUT were placed on a table of at a 1.5 m height.

A signal generator was connected to the reference antenna with a low loss RF cable. To minimize the influence of the RF cable in the radiating pattern, the cable was lined with snap on ferrites at a separating distance of 10 cm.

A CW tone was then provided to the calibrated reference antenna and reference scan was then collected at the frequencies noted in this test report.

Using the same test setup, the antenna under test (AUT) was placed into the chamber. If an RF patch cable was provided by the manufacturer an additional offset factored into the final value.

A polar plot was then collected at the antenna height of maximum field strength. This plot was then compared to the reference antenna scan. Using the antenna gain (dBi) of the reference antenna the absolute gain of the AUT was calculated.

2D ANTENNA PATTERN MEASUREMENTS

EmiR5 2023.08.29.0 PSA-ESCI 2023.12.23.0

Work Order:	MASI0928	**Date:**	2024-05-01		
Project:	None	**Temperature:**	21.8°C		
Job Site:	OC10	**Humidity:**	49.60%		
Serial Number:	2404700001	**Barometric Pres.:**	1011 mbar	**Tested by:**	Nolan De Ramos
EUT:	MightySat				
Configuration:	MASI0928-1				
Customer:	Masimo Corporation				
Attendees:	Rahul Kantharia				
EUT Power:	Battery				
Operating Mode:	Transmitting Bluetooth Low Energy: Low Channel 2402 MHz				
Deviations:	None				
Comments:	None				

Frequency (MHz) **2402**

Measurement Antenna Polarity **Horizontal**

Antenna Under Test (AUT) Polarity **X**

Maximum Amplitude (dBuV/m) **102.1596**

Azimuth at Maximum **261°**

Minimum Amplitude (dBuV/m) **87.15959**

Azimuth at Minimum **56°**

3 dB Beamwidth **49°**

Run #	2	**Test Distance (m)**	3	**Antenna Height(s)**	1.5		

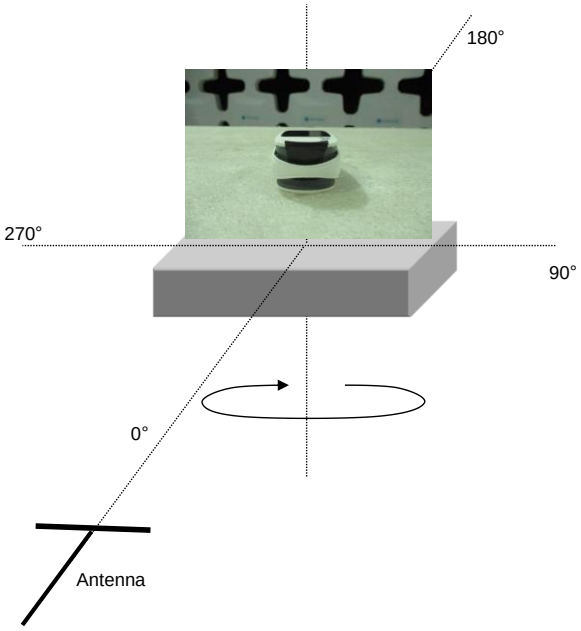

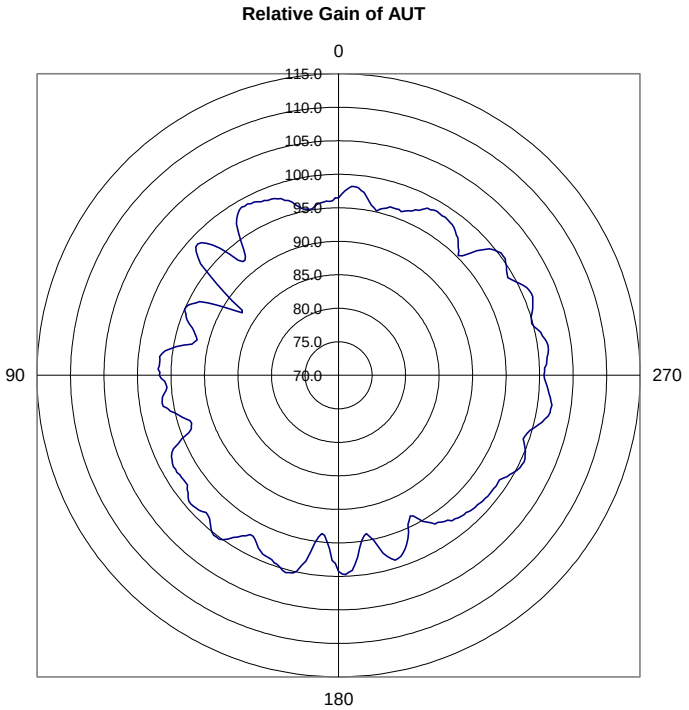

2D ANTENNA PATTERN MEASUREMENTS

EmiR5 2023.08.29.0 PSA-ESCI 2023.12.23.0

Work Order:	MASI0928	**Date:**	2024-05-01		
Project:	None	**Temperature:**	21.8°C		
Job Site:	OC10	**Humidity:**	49.60%		
Serial Number:	2404700001	**Barometric Pres.:**	1011 mbar	**Tested by:**	Nolan De Ramos
EUT:	MightySat				
Configuration:	MASI0928-1				
Customer:	Masimo Corporation				
Attendees:	Rahul Kantharia				
EUT Power:	Battery				
Operating Mode:	Transmitting Bluetooth Low Energy: Low Channel 2402 MHz				
Deviations:	None				
Comments:	None				

Frequency (MHz) **2402**

Measurement Antenna Polarity **Vertical**

Antenna Under Test (AUT) Polarity **X**

Maximum Amplitude (dBuV/m) **101.6596**

Azimuth at Maximum **261°**

Minimum Amplitude (dBuV/m) **84.15959**

Azimuth at Minimum **55°**

3 dB Beamwidth **73°**

Run #	3	**Test Distance (m)**	3	**Antenna Height(s)**	1.5		

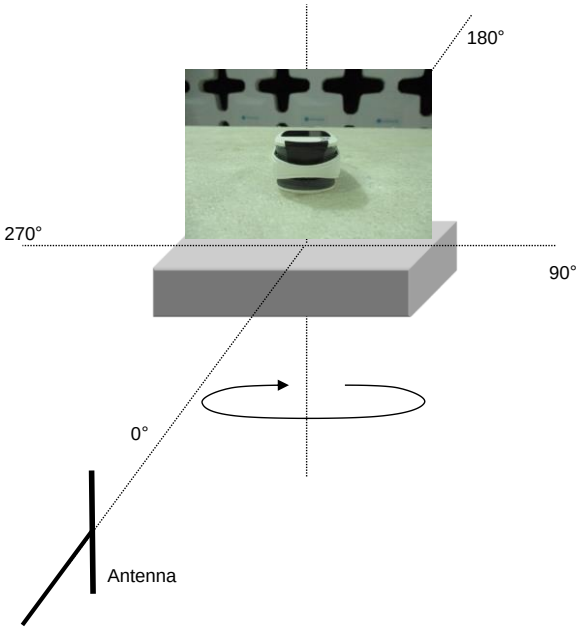

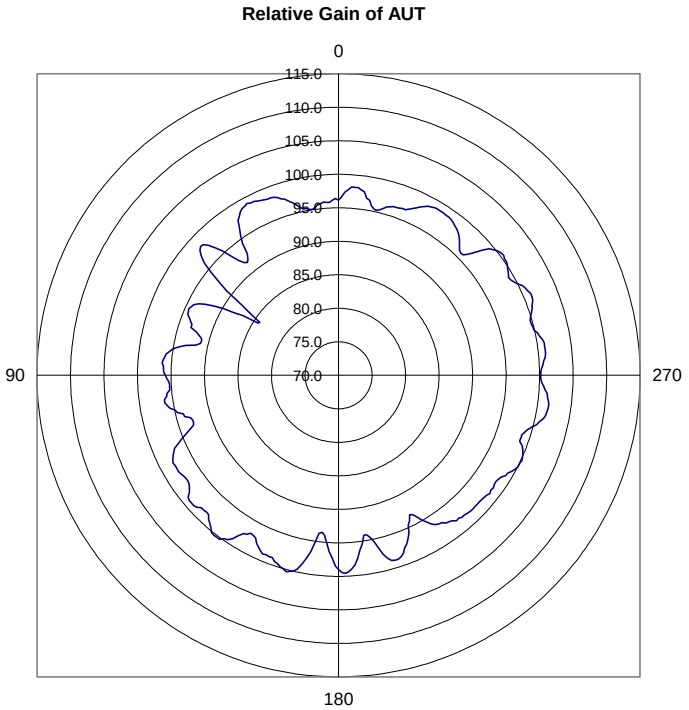

2D ANTENNA PATTERN MEASUREMENTS

EmiR5 2023.08.29.0 PSA-ESCI 2023.12.23.0

Work Order:	MASI0928	**Date:**	2024-05-01		
Project:	None	**Temperature:**	21.8°C		
Job Site:	OC10	**Humidity:**	49.60%		
Serial Number:	2404700001	**Barometric Pres.:**	1011 mbar	**Tested by:**	Nolan De Ramos
EUT:	MightySat				
Configuration:	MASI0928-1				
Customer:	Masimo Corporation				
Attendees:	Rahul Kantharia				
EUT Power:	Battery				
Operating Mode:	Transmitting Bluetooth Low Energy: Mid Channel 2440 MHz				
Deviations:	None				
Comments:	None				

Frequency (MHz) **2440**

Measurement Antenna Polarity **Horizontal**

Antenna Under Test (AUT) Polarity **X**

Maximum Amplitude (dBuV/m) **109.8326**

Azimuth at Maximum **90°**

Minimum Amplitude (dBuV/m) **87.1326**

Azimuth at Minimum **284°**

3 dB Beamwidth **68°**

Run #	4	**Test Distance (m)**	3	**Antenna Height(s)**	1.5		

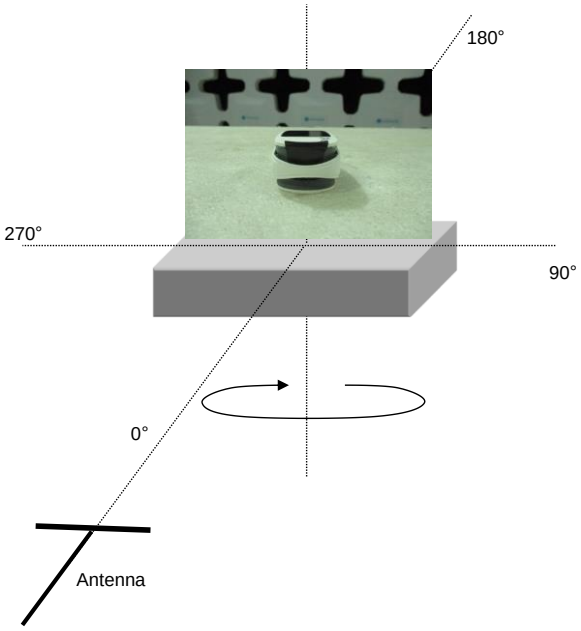

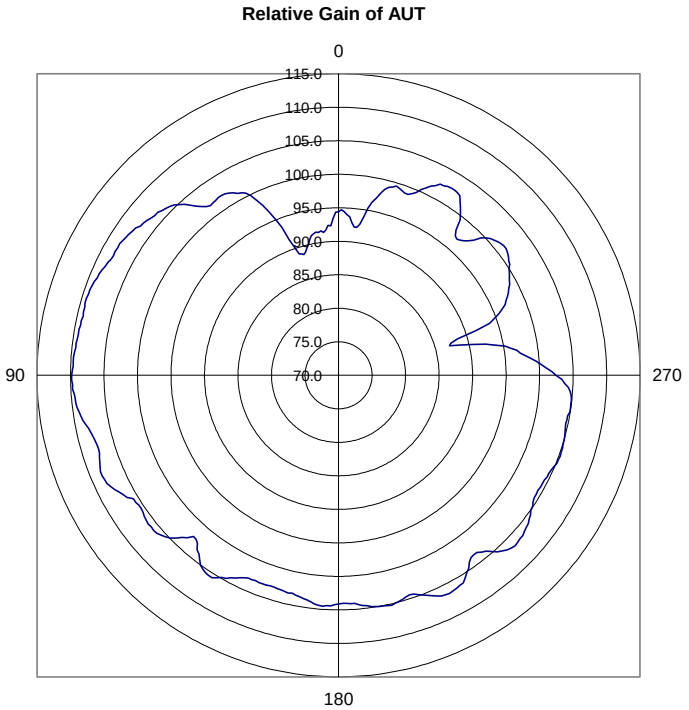

2D ANTENNA PATTERN MEASUREMENTS

EmiR5 2023.08.29.0 PSA-ESCI 2023.12.23.0

Work Order:	MASI0928	**Date:**	2024-05-01		
Project:	None	**Temperature:**	21.8°C		
Job Site:	OC10	**Humidity:**	49.60%		
Serial Number:	2404700001	**Barometric Pres.:**	1011 mbar	**Tested by:**	Nolan De Ramos
EUT:	MightySat				
Configuration:	MASI0928-1				
Customer:	Masimo Corporation				
Attendees:	Rahul Kantharia				
EUT Power:	Battery				
Operating Mode:	Transmitting Bluetooth Low Energy: Mid Channel 2440 MHz				
Deviations:	None				
Comments:	None				

Frequency (MHz) **2440**

Measurement Antenna Polarity **Vertical**

Antenna Under Test (AUT) Polarity **X**

Maximum Amplitude (dBuV/m) **102.9326**

Azimuth at Maximum **143°**

Minimum Amplitude (dBuV/m) **88.1326**

Azimuth at Minimum **210°**

3 dB Beamwidth **46°**

Run #	5	**Test Distance (m)**	3	**Antenna Height(s)**	1.5		

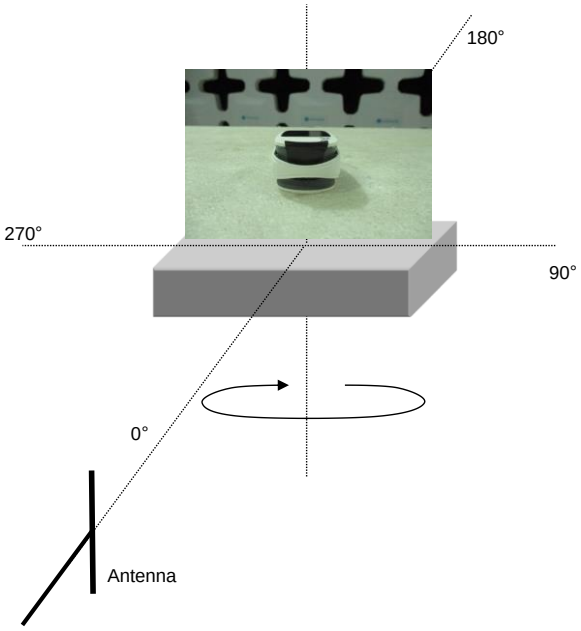

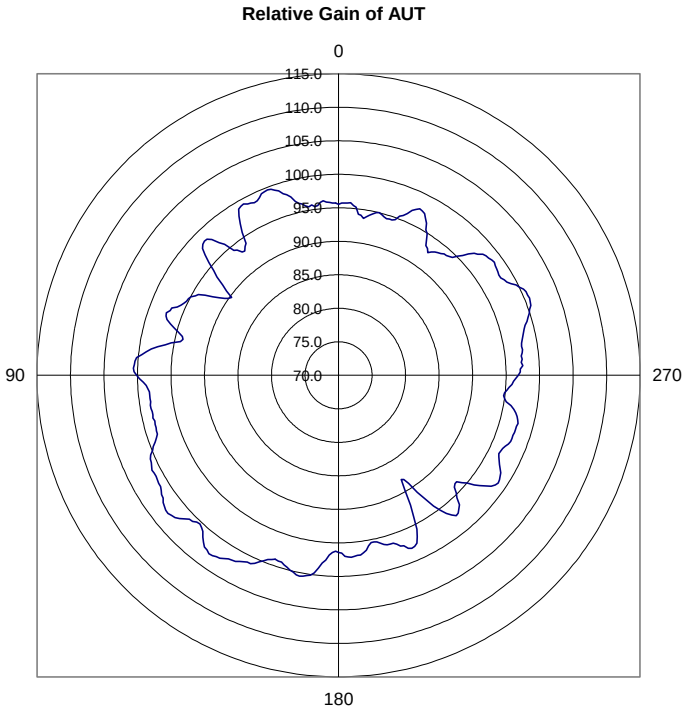

2D ANTENNA PATTERN MEASUREMENTS

EmiR5 2023.08.29.0 PSA-ESCI 2023.12.23.0

Work Order:	MASI0928	**Date:**	2024-05-01		
Project:	None	**Temperature:**	21.8°C		
Job Site:	OC10	**Humidity:**	49.60%		
Serial Number:	2404700001	**Barometric Pres.:**	1011 mbar	**Tested by:**	Nolan De Ramos
EUT:	MightySat				
Configuration:	MASI0928-1				
Customer:	Masimo Corporation				
Attendees:	Rahul Kantharia				
EUT Power:	Battery				
Operating Mode:	Transmitting Bluetooth Low Energy: High Channel 2480 MHz				
Deviations:	None				
Comments:	None				

Frequency (MHz) **2480**

Measurement Antenna Polarity **Horizontal**

Antenna Under Test (AUT) Polarity **X**

Maximum Amplitude (dBuV/m) **112.5342**

Azimuth at Maximum **96°**

Minimum Amplitude (dBuV/m) **92.9342**

Azimuth at Minimum **346°**

3 dB Beamwidth **85°**

Run #	6	**Test Distance (m)**	3	**Antenna Height(s)**	1.5		

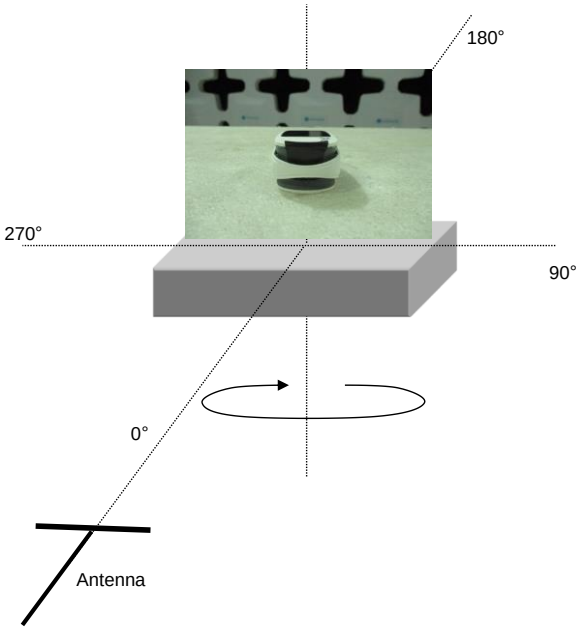

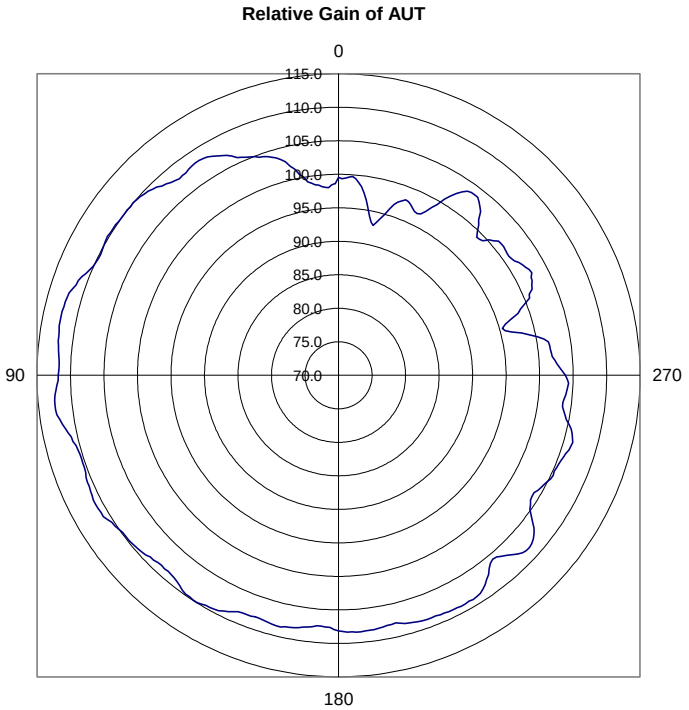

2D ANTENNA PATTERN MEASUREMENTS

EmiR5 2023.08.29.0 PSA-ESCI 2023.12.23.0

Work Order:	MASI0928	**Date:**	2024-05-01		
Project:	None	**Temperature:**	21.8°C		
Job Site:	OC10	**Humidity:**	49.60%		
Serial Number:	2404700001	**Barometric Pres.:**	1011 mbar	**Tested by:**	Nolan De Ramos
EUT:	MightySat				
Configuration:	MASI0928-1				
Customer:	Masimo Corporation				
Attendees:	Rahul Kantharia				
EUT Power:	Battery				
Operating Mode:	Transmitting Bluetooth Low Energy: High Channel 2480 MHz				
Deviations:	None				
Comments:	None				

Frequency (MHz) **2480**

Measurement Antenna Polarity **Vertical**

Antenna Under Test (AUT) Polarity **X**

Maximum Amplitude (dBuV/m) **106.8342**

Azimuth at Maximum **149°**

Minimum Amplitude (dBuV/m) **74.2342**

Azimuth at Minimum **327°**

3 dB Beamwidth **68°**

Run #	7	**Test Distance (m)**	3	**Antenna Height(s)**	1.5		

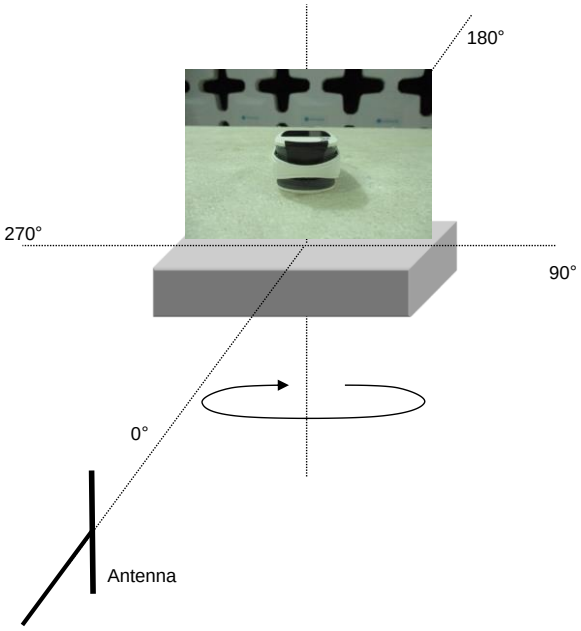

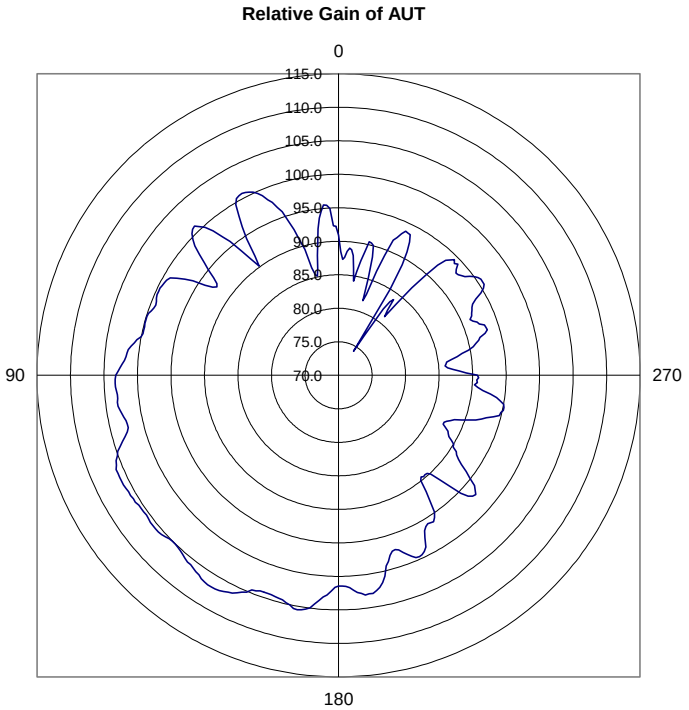

2D ANTENNA PATTERN MEASUREMENTS

EmiR5 2023.08.29.0 PSA-ESCI 2023.12.23.0

Work Order:	MASI0928	**Date:**	2024-05-01		
Project:	None	**Temperature:**	21.8°C		
Job Site:	OC10	**Humidity:**	49.60%		
Serial Number:	2404700001	**Barometric Pres.:**	1011 mbar	**Tested by:**	Nolan De Ramos
EUT:	MightySat				
Configuration:	MASI0928-1				
Customer:	Masimo Corporation				
Attendees:	Rahul Kantharia				
EUT Power:	Battery				
Operating Mode:	Transmitting Bluetooth Low Energy: High Channel 2480 MHz				
Deviations:	None				
Comments:	None				

Frequency (MHz) **2480**

Measurement Antenna Polarity **Horizontal**

Antenna Under Test (AUT) Polarity **Z**

Maximum Amplitude (dBuV/m) **110.7342**

Azimuth at Maximum **22°**

Minimum Amplitude (dBuV/m) **78.8342**

Azimuth at Minimum **150°**

3 dB Beamwidth **59°**

Run #	8	**Test Distance (m)**	3	**Antenna Height(s)**	1.5		

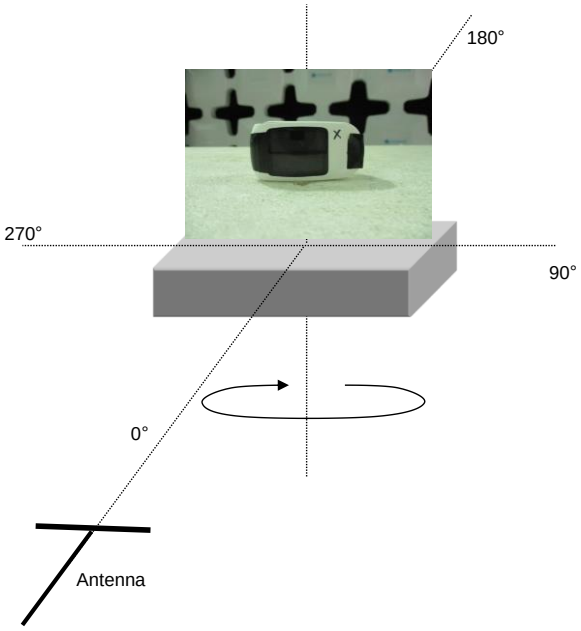

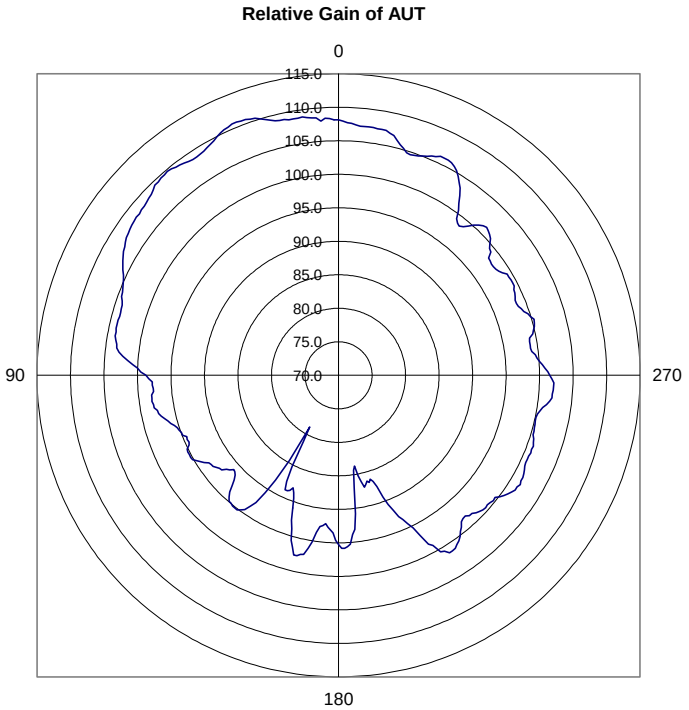

2D ANTENNA PATTERN MEASUREMENTS

EmiR5 2023.08.29.0 PSA-ESCI 2023.12.23.0

Work Order:	MASI0928	**Date:**	2024-05-01		
Project:	None	**Temperature:**	21.8°C		
Job Site:	OC10	**Humidity:**	49.60%		
Serial Number:	2404700001	**Barometric Pres.:**	1011 mbar	**Tested by:**	Nolan De Ramos
EUT:	MightySat				
Configuration:	MASI0928-1				
Customer:	Masimo Corporation				
Attendees:	Rahul Kantharia				
EUT Power:	Battery				
Operating Mode:	Transmitting Bluetooth Low Energy: High Channel 2480 MHz				
Deviations:	None				
Comments:	None				

Frequency (MHz) **2480**

Measurement Antenna Polarity **Vertical**

Antenna Under Test (AUT) Polarity **Z**

Maximum Amplitude (dBuV/m) **111.0342**

Azimuth at Maximum **264°**

Minimum Amplitude (dBuV/m) **89.5342**

Azimuth at Minimum **130°**

3 dB Beamwidth **65°**

Run #	9	**Test Distance (m)**	3	**Antenna Height(s)**	1.5		

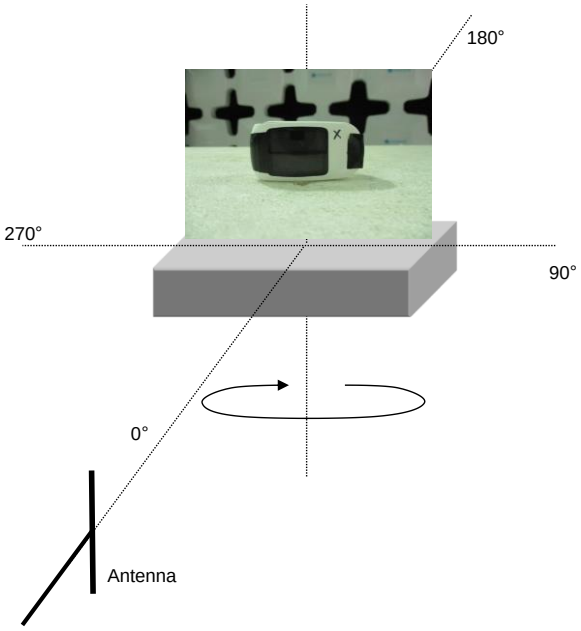

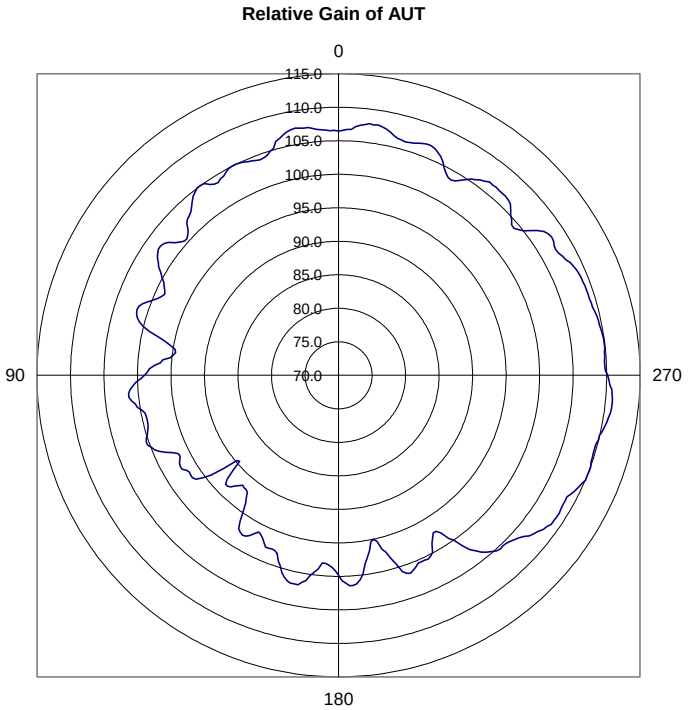

2D ANTENNA PATTERN MEASUREMENTS

EmiR5 2023.08.29.0 PSA-ESCI 2023.12.23.0

Work Order:	MASI0928	**Date:**	2024-05-01		
Project:	None	**Temperature:**	21.8°C		
Job Site:	OC10	**Humidity:**	49.60%		
Serial Number:	2404700001	**Barometric Pres.:**	1011 mbar	**Tested by:**	Nolan De Ramos
EUT:	MightySat				
Configuration:	MASI0928-1				
Customer:	Masimo Corporation				
Attendees:	Rahul Kantharia				
EUT Power:	Battery				
Operating Mode:	Transmitting Bluetooth Low Energy: High Channel 2480 MHz				
Deviations:	None				
Comments:	None				

Frequency (MHz) **2480**

Measurement Antenna Polarity **Horizontal**

Antenna Under Test (AUT) Polarity **Y**

Maximum Amplitude (dBuV/m) **106.5342**

Azimuth at Maximum **348°**

Minimum Amplitude (dBuV/m) **79.4342**

Azimuth at Minimum **251°**

3 dB Beamwidth **47°**

Run #	10	**Test Distance (m)**	3	**Antenna Height(s)**	1.5		

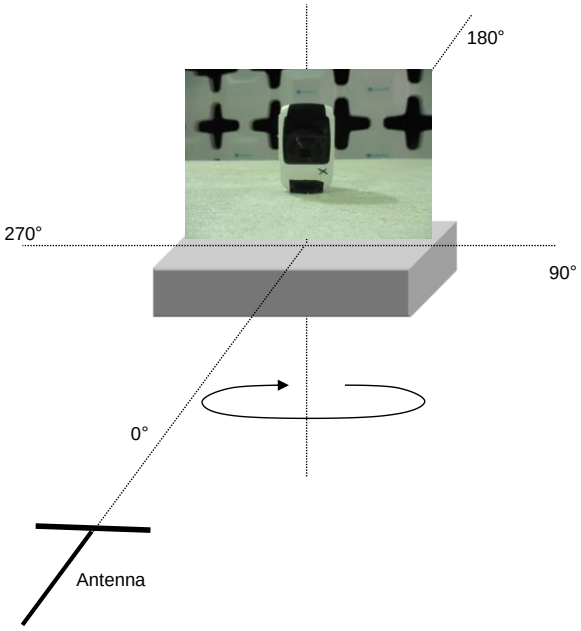

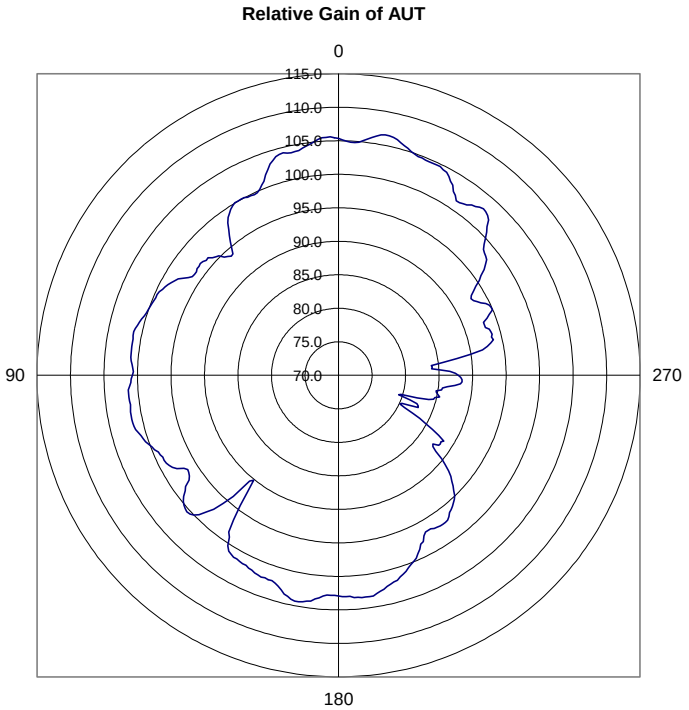

2D ANTENNA PATTERN MEASUREMENTS

EmiR5 2023.08.29.0 PSA-ESCI 2023.12.23.0

Work Order:	MASI0928	**Date:**	2024-05-01		
Project:	None	**Temperature:**	21.8°C		
Job Site:	OC10	**Humidity:**	49.60%		
Serial Number:	2404700001	**Barometric Pres.:**	1011 mbar	**Tested by:**	Nolan De Ramos
EUT:	MightySat				
Configuration:	MASI0928-1				
Customer:	Masimo Corporation				
Attendees:	Rahul Kantharia				
EUT Power:	Battery				
Operating Mode:	Transmitting Bluetooth Low Energy: High Channel 2480 MHz				
Deviations:	None				
Comments:	None				

Frequency (MHz) **2480**

Measurement Antenna Polarity **Vertical**

Antenna Under Test (AUT) Polarity **Y**

Maximum Amplitude (dBuV/m) **112.7342**

Azimuth at Maximum **75°**

Minimum Amplitude (dBuV/m) **75.1342**

Azimuth at Minimum **157°**

3 dB Beamwidth **104°**

Run #	11	**Test Distance (m)**	3	**Antenna Height(s)**	1.5		

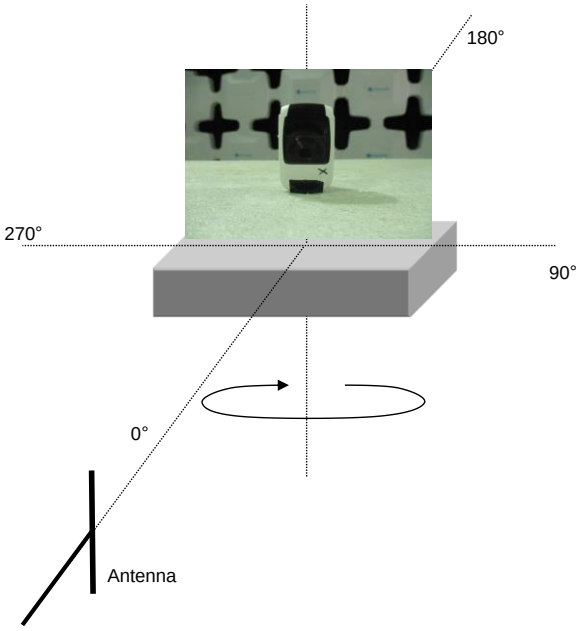

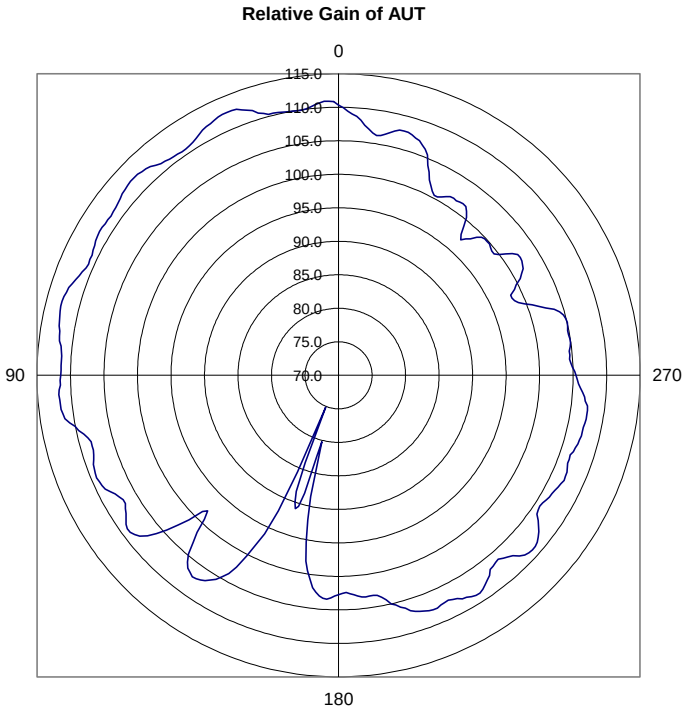

2D ANTENNA PATTERN MEASUREMENTS

EmiR5 2023.08.29.0 PSA-ESCI 2023.12.23.0

Work Order:	MASI0928	**Date:**	2024-05-01		
Project:	None	**Temperature:**	21.8°C		
Job Site:	OC10	**Humidity:**	49.60%		
Serial Number:	n/a	**Barometric Pres.:**	1011 mbar	**Tested by:**	Nolan De Ramos
EUT:	Equip Code: AHE				
Configuration:	Reference Antenna				
Customer:	Masimo Corporation				
Attendees:	Rahul Kantharia				
EUT Power:	Battery				
Operating Mode:	Transmitting continuous wave at 2480 MHz. Reference antenna measured input power: -6.78 dBm.				
Deviations:	None				
Comments:	None				

Frequency (MHz)	**2480**	Maximum Amplitude (dBuV/m)	**112.5342**
		Azimuth at Maximum	**358°**
Measurement Antenna Polarity	**Vertical**	Minimum Amplitude (dBuV/m)	**90.6342**
Antenna Under Test (AUT) Polarity	**Vertical**	Azimuth at Minimum	**218°**
		3 dB Beamwidth	**60°**

Run #	13	**Test Distance (m)**	3	**Antenna Height(s)**	1.5		

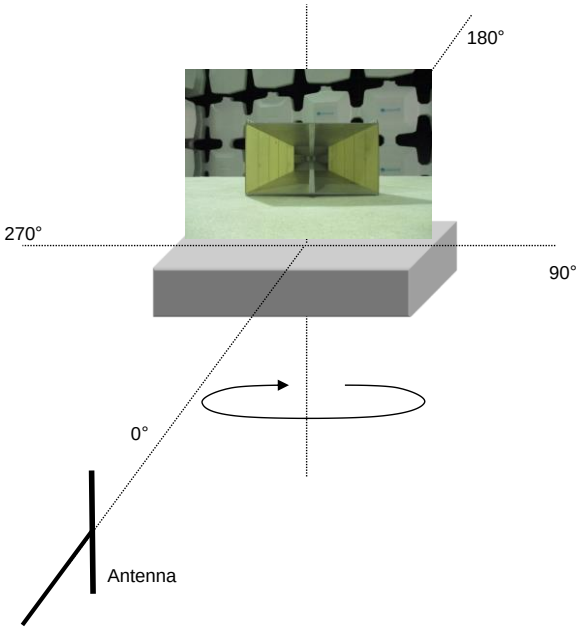

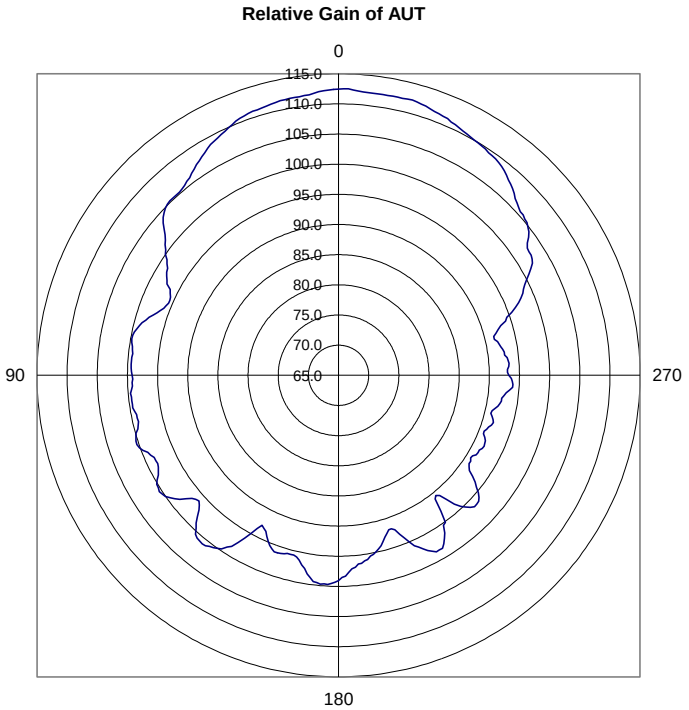

2D ANTENNA PATTERN MEASUREMENTS

EmiR5 2023.08.29.0 PSA-ESCI 2023.12.23.0

Work Order:	MASI0928	**Date:**	2024-05-01		
Project:	None	**Temperature:**	21.8°C		
Job Site:	OC10	**Humidity:**	49.60%		
Serial Number:	2404700001	**Barometric Pres.:**	1011 mbar	**Tested by:**	Nolan De Ramos
EUT:	MightySat				
Configuration:	MASI0928-1				
Customer:	Masimo Corporation				
Attendees:	Rahul Kantharia				
EUT Power:	Battery				
Operating Mode:	Transmitting Bluetooth Low Energy: High Channel 2480 MHz				
Deviations:	None				
Comments:	None				

Frequency	**2480**	Absolute Gain of Reference Antenna (dBi)	9.7
Measurement Antenna Polarity	**Vertical**	Reference Antenna Relative Gain Max (dBuV/m)	112.53
Antenna Under Test (AUT) Polarity	**Y**	AUT Relative Gain Max (dBuV/m)	112.73
Maximum Absolute Gain of AUT (dBi)	**0.79**	Difference (Reference Antenna - AUT) (dB)	-0.20
Average Absolute Gain of AUT (dBi)	**-5.81**	AUT Setup Loss (dB)	**0**
		Correction Factor (Convert Relative to Absolute Gain) (dB)	**111.94**
3 dB Beamwidth	**104°**		
		Reference Antenna Measured Input Power (dBm)	-6.78
		EUT Conducted Output Power (dBm)	2.33
		Power Delta (Antenna Power-Output Power) (dB)	-9.11

Run #		**Test Distance (m)**		**Antenna Height(s)**		**Results**	NA

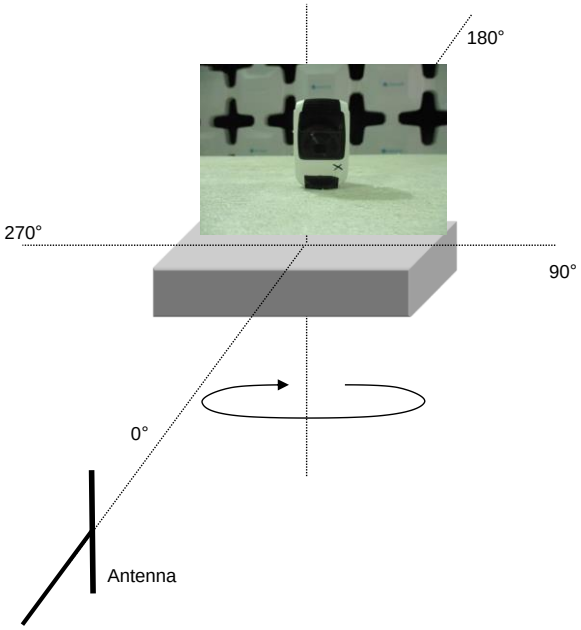

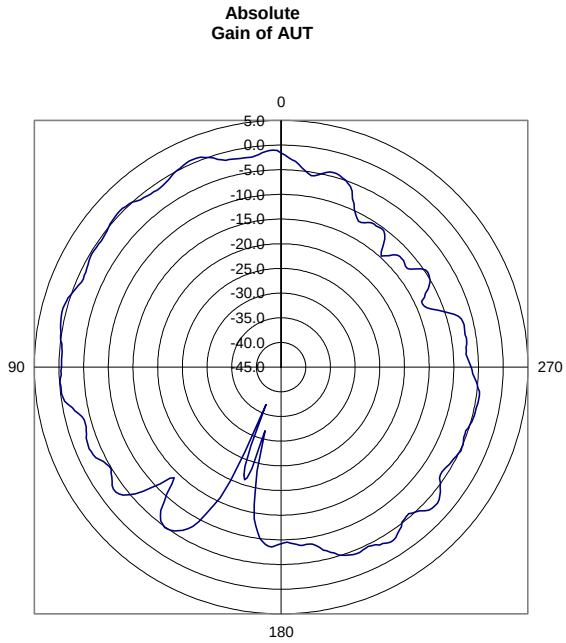

End of Test Report