Trim size 4.5 x 6.875 in.
Spread size 9 x 6.875 in.

PROPEL

FCC Part 15 Notice

CAUTION: Changes or modifications not expressly approved by the party responsible for compliance could void the user's authority to operate the equipment.

NOTE: This equipment has been tested and found to comply with the limits for a Class B digital device, pursuant to Part 15 of the FCC Rules. These limits are designed to provide reasonable protection against harmful interference in a residential installation. This equipment generates, uses and can radiate radio frequency energy and, if not installed and used in accordance with the instructions, may cause harmful interference to radio communications. However, there is no guarantee that interference will not occur in a particular installation. If this equipment does cause harmful interference to radio or television reception, which can be determined by turning the equipment off and on, the user is encouraged to try to correct the interference by one or more of the following measures:

- Reorient or relocate the receiving antenna.
- Increase the separation between the equipment and receiver.
- Connect the equipment into an outlet on a circuit different from that to which the receiver is connected.
- Consult the dealer or experienced radio/TV technician for help.

This device complies with Part 15 of the FCC Rules. Operation is subject to the following two conditions :
(1) This device may not cause harmful interference, and
(2) this device must accept any interference received, including interference that may cause undesired operation.

INDUSTRY CANADA NOTICE: CANADA ONLY.

This device complies with Industry Canada licence-exempt RSS standard(s). Operation is subject to the following two conditions: (1) this device may not cause interference, and (2) this device must accept any interference, including interference that may cause undesired operation of the device.

Le présent appareil est conforme aux CNR d'Industrie Canada applicables aux appareils radio exempts de licence. L'exploitation est autorisée aux deux conditions suivantes : (1) l'appareil ne doit pas produire de brouillage, et (2) l'utilisateur de l'appareil doit accepter dout brouillage radioélectrique subi, même si le brouillage est susceptible d'en compromettre le fonctionnement.

⚠ WARNING!
CHOKING HAZARD - Small parts.
Not suitable for children under 3 years.

Conforms to safety requirements of ASTM, CPSIA and FCC.

©2016 Rooftop Brands™ All rights reserved
Tel: + (1) 949-566-9573 • www.propelrc.com

V1
Made in China

PROPEL

PROTON™ MICRO DRONE

INDOOR / OUTDOOR WIRELESS QUADROCOPTER

INSTRUCTION BOOKLET

WARNING: Never leave product charging unattended for extended periods of time. Always disconnect the Proton™ from charger immediately after it is fully charged. Please refer to enclosed safety instructions.

PACKAGE CONTAINS:

Proton™

2.4G Wireless Controller

Spare Parts

USB charging cord

Instruction Manual

Colors and styles may slightly vary.

TABLE OF CONTENTS

Product Features 2
Remote Control Battery Installation 2
Charging Your Proton™ Battery 2
Proton™ Diagram 3
Remote Control Diagram 3
Synching Your Proton™ 4
Flight Preperation 4
Flying Tips 4
Recognizing The Front & Back Of The Proton™ 5
3/4 Channel Select 5
4 Channel Flight Controls (Advanced Flying) 5
3 Channel Flight Controls (Beginner Flying) 6
Switching To Medium & High Speed Mode 6
Understanding Trim Adjustments 7
Level Surface Gyro Calibration 7
Low Battery Warning 7
Performing A 360º Stunt Roll 8
Trouble Shooting 9
Replacing The Propeller Blades 9
Warnings 10
Battery Warnings 10
Care and Maintenance 10
FCC Information 11

Thank you for purchasing the Proton™ 2.4 Ghz Mini Quadrocopter. Please read this instruction booklet as it contains valuable information on how to properly fly and care for your Proton™ Drone.

FEATURES

- Built-in 6axis gyro chip for extremely stable flight.
- 2.4 Ghz digital technology allows for flight range up to 100 feet.
- 4 channel flight controls allow for incredible maneuverability including 360º aerial stunts!
- Unique Switch-Blade technology allows you to operate in either 3ch or 4ch modes for beginner to advanced pilots

REMOTE CONTROL BATTERY INSTALLATION

1. Unscrew the battery cover from the back of the controller as shown in diagram A.
2. Install 2 "AAA" alkaline batteries into the controller as shown in diagram B.
3. Replace the battery cover.
4. Turn over the controller and turn the on/off switch to the on position the red LED will flash if batteries are installed correctly.

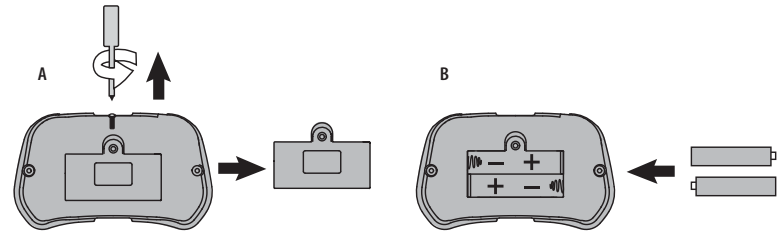

CHARGING YOUR PROTON™ BATTERY

1. Switch the quadrocopter Off. Connect the power cable to the unit making sure the arrow side of the connector is on top side facing the top of the Proton™ (see diagrams C1 and C2).
   CAUTION: The USB plug fits the charging socket only in one way. Do not force it. Improper connection will damage the Proton™.
2. Connect the USB end of the cable to your computers USB port (see diagram D).
3. The red LED on the USB plug lights up when charging is complete. Average charging time is 30 minutes.

   Note: If the red LED lights up, either the charging is complete or the USB plug is not properly connected.

   A full charge will allow for about 5 minutes of flight time depending on environment and user input.

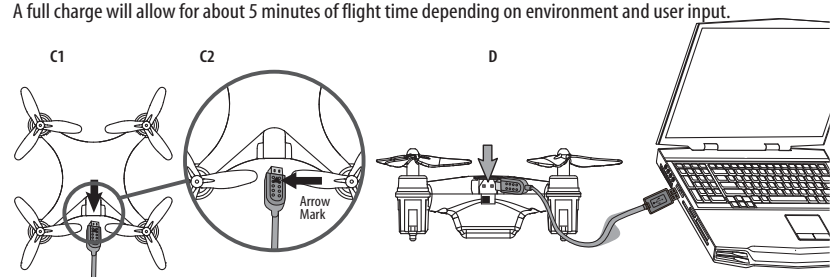

IMPORTANT: ALWAYS REMEMBER TO UNPLUG YOUR CHARGING CORD WHEN NOT IN USE!

PROTON™ DIAGRAM

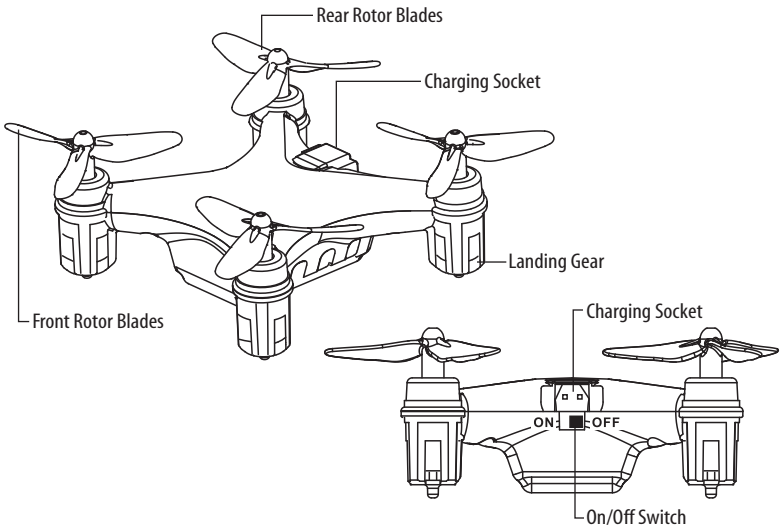

PROTON™ REMOTE DIAGRAM

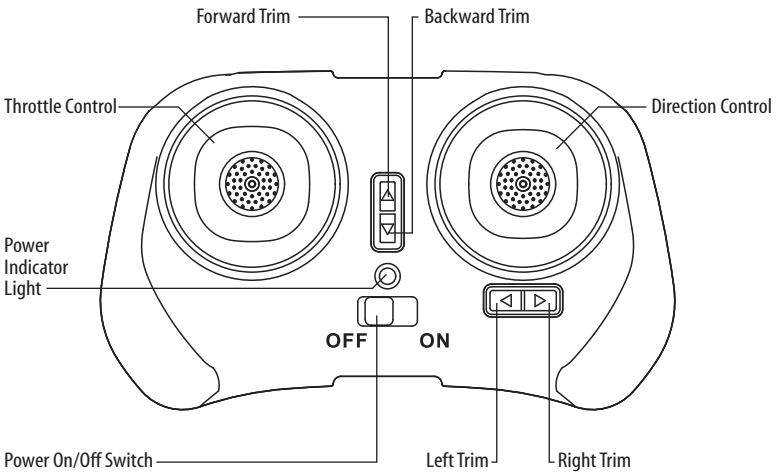

WARNING

DO NOT FLY YOUR PROTON™ IN FOUL WEATHER!

SYNCING YOUR PROTON™

Important! When syncing your Proton™ quadrocopter with the controller always make sure that the quadrocopter is on a flat level surface and that your digital trim settings are in the center position. This ensures that the 6 Axis gyro is properly programmed to mimic your trim settings.

Your Proton™ utilizes an automatic 2.4G channel selection system that allows up to 8 people to fly side by side in the same wireless range with no interference.

For One-Person Play:

1. Before starting, make sure that the power on both your controller and Proton™ are in the OFF position. Make sure that there are no other 2.4G devices in the area as well.
2. Turn ON the Proton™ and set it down on a flat surface. The LED indicator lights of the Proton™ should begin to flash rapidly.
3. Turn ON the remote, you will hear two short beeps. The Proton™'s LED lights should now flash slowly. Push the throttle on the left all the way forward(1 beep) and then pull the throttle all the way back. A 2nd beep will sound and the lights should turn to solid. This indicates your controller and the quadrocopter are successfully synced. If not, repeat above steps.

For Multi Person Play:

4. Before starting, make sure that the power on all Proton™ drones and Controllers are in the OFF position. Make sure that there are no other 2.4G devices in the area.
5. Each person will have to sync their Proton™ individually at a different time to avoid interference. Follow steps 1 to 3 above making sure that no one else is syncing at the same time.
6. After syncing a player's Proton™, it should be left ON until all players have synced their Proton™ quadrocopters.
7. Should there be a mistake or interference, all players must turn off their controllers and Proton™ quadrocopters for up to 60 seconds and then begin the process again.

PREPARING FOR FLIGHT

- Verify that there are 2 "AAA" batteries inside the remote control unit and the Proton™ has been fully charged.
- Make sure your Proton™ and controller are both turned on.
- Make sure to be in a large space with an open radius of at least 50 feet.
- Make sure the empty space has no obstacles and water close by. Set your Proton™ on a clean flat surface before take-off.

DO NOT ATTEMPT TO FLY YOUR Proton™ IF THERE IS RAIN, SNOW, HEAVY WINDS, THUNDER OR LIGHTNING OUTDOORS. IT COULD DAMAGE YOUR PRODUCT AND POSSIBLY EVEN CAUSE BODILY HARM.

FLYING TIPS

- It is recommended that you operate the Proton™ in a wide open space. The ideal space should have a 200 foot radius.
- Parental guidance or adult supervision is suggested at all times.
- If you are flying the Proton™ with others, make sure all spectators are behind you.
- For best performance, it is recommended that you operate the Proton™ in zero wind conditions, as wind can greatly affect the performance of the aircraft.

RECOGNIZING THE FRONT & BACK OF THE PROTON™

Even though the Proton™ has four rotors, there is still a "front" or forward facing direction and "back" or backwards facing direction. The front and forward facing direction of the Proton™ is the side with two gray propellers (see diagram E). The rear and backwards facing of the Quadrocopter is the side with two black propellers (see diagram E).

NOTE: The front of the Quadrocopter displays WHITE LED lights and the back of the Quadrocopter displays RED LED lights.

E

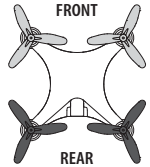

F

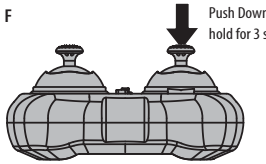

3/4 CHANNEL SELECT

Proton™ allows you to control your micro drone in 3 channel mode (beginner) or 4 channel mode (advanced flying). The Proton™ default setting is 4 Channel mode.

To change to 3 Channel mode:
After syncing your quadrocopter, depress and hold the control stick on the right side straight down for 3 seconds, you will hear a long beep indicating the Proton™ is now set to 3CH mode. (see digram F).

To change back to 4 Channel mode:
Depress and hold the control stick on the right side straight down for 3 seconds again, you will hear a long beep indicating the Proton™ is now set to 4CH mode. (see digram F).

4 CHANNEL FLIGHT CONTROLS (ADVANCED FLYING)

Below is a list of basic flight functions for your long-range remote control Proton™. While learning to fly your Proton™ it is best to start in a large space until you get used to the basic controls. As you master flying your Proton™ you can move to more advanced maneuvering techniques. Practice makes perfect! When you have these basic steps down you can move to the next level.

Move the left Throttle stick upwards to increase the speed of the propellers and the Proton™ will accelerate upwards and ascend.

Move the left Throttle stick down to decrease the speed and the Proton™ will decelerate and descend (see diagram G).

G

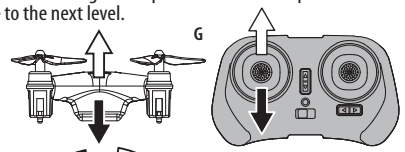

While in the air, move the left Throttle stick left and the Proton™ will rotate left.

Move the left Throttle stick right and the Proton™ will rotate right (see diagram H).

H

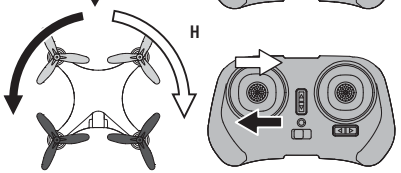

While in the air, move the right Direction Stick up and the Proton™ will move forward.

Move the right Direction Stick down and the Proton ™ will move backward (see diagram I).

I

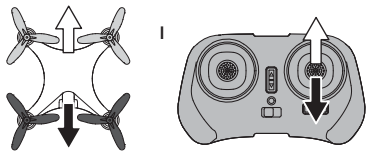

While in the air, move the right Direction Stick left and the Proton™ will bank to the left.

Move the right Direction Stick right and the Proton™ will bank to the right (see diagram J).

J

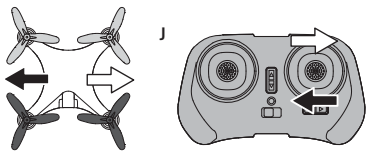

3 CHANNEL FLIGHT CONTROLS (BEGINNER FLYING)

Below is a list of basic flight functions for your long-range remote control Proton™. While learning to fly your Proton™ it is best to start in a large space until you get used to the basic controls. As you master flying your Proton™ you can move to more advanced maneuvering techniques. Practice makes perfect! When you have these basic steps down you can move to the next level.

Move the left Throttle stick upwards to increase the speed of the propellers and the Proton™ will accelerate upwards and ascend.

Move the left Throttle stick down to decrease the speed and the Proton™ will decelerate and descend (see diagram K).

K

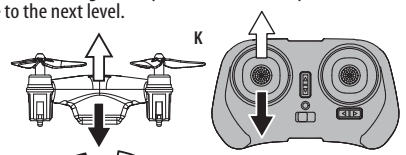

While in the air, move the right Throttle stick left and the Proton™ will rotate left.

Move the left Throttle stick right and the Proton™ will rotate right (see diagram L).

L

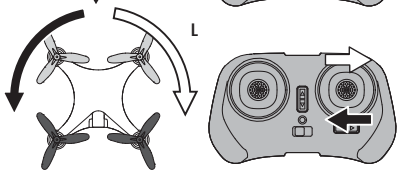

While in the air, move the right Direction Stick up and the Proton™ will move forward.

Move the right Direction Stick down and the Proton ™ will move backward (see diagram M).

M

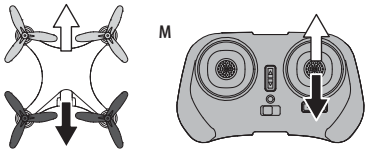

SWITCHING TO MEDIUM & HIGH SPEED MODE

To change the Proton™'s flight speed from the default (low speed) to medium and high speed flight mode:

1. Turn on the remote.
2. Depress the control lever on the left side straight down as if pressing a button to switch modes (see digram N).
3. You will hear two beeps indicating that your drone speed changed to medium speed.
4. To change to high speed mode repeat step 2.
5. Three beeps indicates a speed changed to high speed mode.
6. To switch back to low speed repeat step 2 again, you will hear one beep indicating low speed mode.
7. Speed mode returns to low speed once the remote is turned off.

N

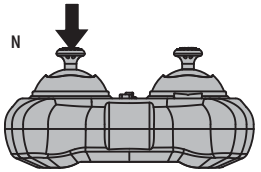

UNDERSTANDING TRIM ADJUSTMENTS

Forward/Backward Trim

- If your Proton™ is drifting forwards or backwards, you may need to adjust the FORWARD/BACKWARD TRIM (see diagram O).
- If your Proton™ drifts forward, push and release the BACKWARD TRIM button back repeatedly until the motion stops and proper flight is maintained.
- If your Proton™ drifts backwards, push and release the FORWARD TRIM button forward in the same manner until the problem is resolved.
- From time to time you may have to adjust the FORWARD or BACKWARD TRIM buttons to ensure the Proton™ will hover in mid-air and respond accurately to your commands.

O

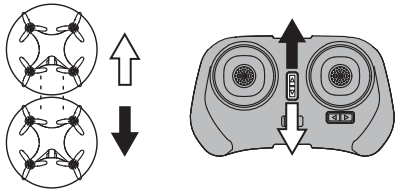

Right/Left Trim

- If your Proton™ is drifting left or right, you may need to adjust the LEFT/RIGHT TRIM button (see diagram P).
- If your Proton™ drifts left, push and release the RIGHT TRIM button repeatedly until the motion stops and proper flight is maintained.
- If your Proton™ drifts right, push and release the LEFT TRIM button in the same manner until the problem is resolved.
- From time to time you may have to adjust the LEFT or RIGHT TRIM buttons to ensure the Proton™ will hover in mid-air and respond accurately to your commands.

P

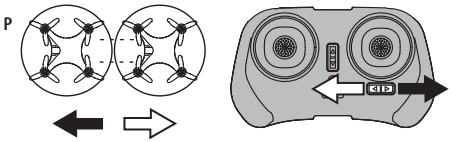

LEVEL SURFACE GYRO CALIBRATION

If the aircraft becomes unstable during the course of flying, or after a crash, you may need to recalibrate the onboard gyro chip.
To do so, place the Proton™ on a flat level surface. Start by syncing the controller with the quadrocopter. Next, pull the right control stick on the remote all the way down and to the right (approximately 45º) and hold for a couple of seconds. The LEDs on the Proton™ will flash quickly and then turn solid when released. This indicates your drone has been stabilized (see diagram Q).

Q

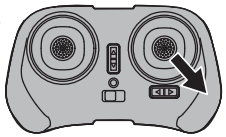

LOW BATTERY WARNING

If the power indicator LED on the remote lights up it means you are running at low voltage and need to land the aircraft slowly and replace the batteries in the controller.

If the LED lights on the quadrocopter begin flashing it means you are running at low voltage and you need to land the aircraft slowly and recharge the quadrocopter unit.

WARNING: Do not attempt a 360º flip when you are given a low voltage warning

PERFORMING A 360º STUNT ROLL

Once the Proton™ is airborne,

1. Press the right control lever straight down.
2. Move the lever in the direction you wish to perform the 360º roll (see diagram R).

R

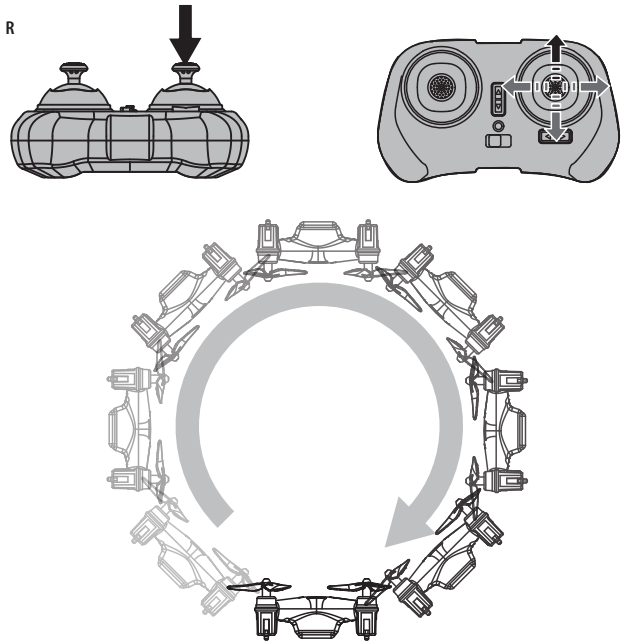

TROUBLESHOOTING YOUR PROTON™

PROBLEM	POSSIBLE REASON	SOLUTION
NO POWER	1. Power switched off 2. Polarity is reversed 3. Batteries may be dead	1. Switch the ON/OFF switch to ON 2. Make sure all batteries are installed correctly (see diagram B) 3. Replace batteries
Remote Not Responding	1. Remote is switched off 2. Proton™ is switched off 3. Too windy 4. The Remote light is flashing	1. Switch the ON/OFF switch to ON 2. Switch the ON/OFF switch to ON 3. Windy conditions severly affect the operation of the Proton™ 4. Replace batteries
Drone Won't lift off	1. Rotor speed too slow 2. Drone not fully charged	1. Push throttle lever forward 2. Recharge your Proton™
Drone Decsends Too Fast	1. Moving the throttle too quickly	1. Control the throttle slower and smoother
Drone Not Responding	1. Gyroscopes not functioning	1. Turn on the Proton™ and Reset the Gyros (see diagram L)
Loss of Proton™ Control	1. Drone is out of range of remote	1. Keep the drone within a 20 meter radius of the remote

REPLACING THE PROPELLER BLADES

Your Proton™ propeller system is a precision instrument that may need repair or replacement from time to time for optimal flight function. Crash landing from high-speed aerial flights may cause damage to your Proton™'s propellers.

1. Proton™ have four blades, two gray propellers on the front, and two black propellers on the back Please note that the blades and the Proton™ are labeled with an embossed A or B (see the diagram S).
2. When replacing the propeller blades, gently remove the blade from the rotor shaft. Make sure to match both the color of the blade and the indication letter on the blade with the letter on the aircraft.
3. Replace the damaged blade with the correct blade.

Diagram S

Gray Blade Front Left = A
Gray Blade Front Right = B

Black Blade Back Left = B
Black Blade Back Right = A

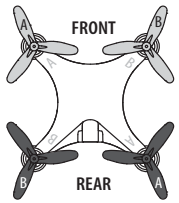

PROTON™ WARNING:

The Proton™ is designed for INDOOR or OUTDOOR flight. Proton™'s blades revolve at high speeds and can cause damage to the user, spectators and animals. Stand away from the Proton™ to reduce the risk of getting into the flight path. Warn spectators that you will be flying your Proton™ so that they are aware of its position. Before flight, inspect the rotor blades to make certain that the blades are securely fastened to the Proton™.

WARNING!

- Choking/Cutting Hazard. Small Parts/Sharp Rotor Blades.
- Keep hands, hair and loose clothing away from the propeller when the power switch is turned to the ON position.
- Turn off the transmitter and Proton™ power switches when not in use.
- The included charger is built specifically for the Proton™ Li-Poly battery. Do not use it to charge any other battery.
- New alkaline batteries are recommended for maximum performance.
- Parental supervision recommended when flying Proton™

BATTERY WARNINGS

RECHARGEABLE BATTERY:

This Proton™ uses a Li-Poly rechargeable battery. If battery no longer stays charged, dispose of battery properly according to local disposal requirements.

CONTROLLER BATTERIES:

Remote control requires 2 "AAA" batteries (not included). Please read the important battery safety warning below.

- Do not mix alkaline, standard (carbon-zinc) and rechargeable batteries (Nickel Metal Hydride).
- Do not mix old and new batteries.
- Non-rechargeable batteries are not to be recharged.
- Rechargeable batteries are to be removed from the item before being charged (if removable).
- Rechargeable batteries are only to be charged under adult supervision.
- Exhausted batteries should be removed immediately and must be recycled or disposed of properly according to state or local government ordinances and regulations.
- The supply terminals are not to be short-circuited.
- Only batteries of the same or equivalent type as recommended are to be used.
- Batteries are to be inserted with the correct polarity (see inside booklet for diagram).
- Do not dispose batteries in a fire - batteries may leak or explode.

CARE AND MAINTENANCE

- Always remove the batteries from the wireless 2.4G remote control when it is not being used for an extended period of time.
- To clean, gently wipe the remote control and Proton™ with a clean damp cloth.
- Keep the toy away from direct heat or sunlight.
- Do not submerge the toy into water. This can damage the unit beyond repair.
- Parental guidance recommended when installing or replacing the batteries.