FCC Part 90
Test Report

Report No.: AGC00245140101FE09

FCC ID	:	VO6NC3330
PRODUCT DESIGNATION	:	TWO-WAY RADIO
BRAND NAME	:	KYD
MODEL NAME	:	NC-3330
CLIENT	:	QUANZHOU CITY NEW CENTURY COMMUNICATION ELCETRONICS CO., LTD.
DATE OF ISSUE	:	Jan.07, 2014
STANDARD(S)	:	FCC Part 90 Rules
REPORT VERSION	:	V 1.0

Attestation of Global Compliance (Shenzhen) Co., Ltd.

CAUTION: This report shall not be reproduced except in full without the written permission of the test laboratory and shall not be quoted out of context.

VERIFICATION OF COMPLIANCE

Applicant:	QUANZHOU CITY NEW CENTURY COMMUNICATION ELCETRONICS CO., LTD.
	NO. 1 FENGSHOU RD., BEIFENG IND. ZONE, FENGZE DISTRICT, QUANZHOU, FUJIAN, CHINA
Manufacturer:	QUANZHOU CITY NEW CENTURY COMMUNICATION ELCETRONICS CO., LTD.
	NO. 1 FENGSHOU RD., BEIFENG IND. ZONE, FENGZE DISTRICT, QUANZHOU, FUJIAN, CHINA
Product Description:	TWO-WAY RADIO
Brand Name:	KYD
Model Name:	NC-3330
Date of Test:	Jan.02, 2014 to Jan.06, 2014

WE HEREBY CERTIFY THAT:

The above equipment was tested by Attestation of Global Compliance (Shenzhen) Co., Ltd. The data evaluation, test procedures, and equipment configurations shown in this report were made in accordance with the procedures given in ANSI C 63.4:2003. The sample tested as described in this report is in compliance with the FCC Rules Part 90.

The test results of this report relate only to the tested sample identified in this report.

Tested by

Wall Huang Jan.07, 2014

Checked By

Kidd Yang Jan.07, 2014

Authorized By

Solger Zhang Jan.07, 2014

TABLE OF CONTENTS

1. GENERAL INFORMATION 5

1.1 PRODUCT DESCRIPTION 5
1.2 RELATED SUBMITTAL(S) / GRANT (S) 6
1.3 TEST METHODOLOGY 6
1.4 TEST FACILITY 6
1.5 SPECIAL ACCESSORIES 6
1.6 EQUIPMENT MODIFICATIONS 6

2. SYSTEM TEST CONFIGURATION 7

2.1 EUT CONFIGURATION 7
2.2 EUT EXERCISE 7
2.3 GENERAL TECHNICAL REQUIREMENTS 7
2.4 CONFIGURATION OF TESTED SYSTEM 7

3. SUMMARY OF TEST RESULTS 8

4. DESCRIPTION OF TEST MODES 9

5. FREQUENCY TOLERANCE 10

5.1 PROVISIONS APPLICABLE 10
5.2 MEASUREMENT PROCEDURE 10
5.3 TEST SETUP BLOCK DIAGRAM 11
5.4 TEST EQUIPMENT USED: 11
5.5 TEST RESULT 11

6. EMISSION BANDWIDTH 15

6.1 PROVISIONS APPLICABLE 15
6.2 MEASUREMENT PROCEDURE 15
6.3 TEST SETUP BLOCK DIAGRAM 15
6.4 MEASUREMENT EQUIPMENT USED: 15
6.5 MEASUREMENT RESULT: 16

7. UNWANTED RADIATION 17

7.1 PROVISIONS APPLICABLE 17
7.2 MEASUREMENT PROCEDURE 17
7.3 TEST SETUP BLOCK DIAGRAM 18
7.5 MEASUREMENT RESULTS: 20
7.6 EMISSION MASK PLOT 22

8. MODULATION CHARACTERISTICS 23

8.1 PROVISIONS APPLICABLE 23

8.2 MEASUREMENT METHOD 23
8.3 MEASUREMENT INSTRUMENTS.....23
8.4 MEASUREMENT RESULT.....23

9. MAXIMUMN TRANSMITTER POWER 27

9.1 PROVISIONS APPLICABLE 27
9.2 TEST PROCEDURE.....27
9.3 TEST RESULT.....27

10. RANSMITTER FREQUENCY BEHAVIOR 29

10.1PROVISIONS APPLICABLE 29
10.2TEST METHOD.....29
10.3TEST INSTRUMENTS 29

11. RADIATED EMISSION ON RECEIVING MODE 32

11.1PROVISIONS APPLICABLE.....32
11.2TEST METHOD 32
11.3TEST INSTRUMENTS.....32
11.4MEASURE RESULT (MEASURED AT 3M USING FCC PART15 B LIMITS).....33

12. CONDUCTED LIMITS.....35

12.1 PROVISIONS APPLICABLE 35
12.2 MEASUREMENT PROCEDURE.....35
12.3 TEST SETUP BLOCK DIAGRAM.....36
12.4 TEST EQUIPMENT USED 36
12.5 TEST RESULT.....37

13. AUDIO LOW PASS FILTER RESPONSE 39

13.1 LIMITS.....39
13.2. METHOD OF MEASUREMENTS.....39
13.3 TEST DATA 40

APPENDIX I 42

PHOTOGRAPHS OF SETUP.....42

APPENDIX II 43

EXTERNAL VIEW OF EUT 43

1. GENERAL INFORMATION

1.1 PRODUCT DESCRIPTION

The EUT is a Two-way Radio designed for voice communication.
It is designed by way of utilizing the FM modulation achieves the system operating.
A major technical description of EUT is described as following:

Communication Type	Voice / Tone only
Type of Modulation	F3E
Emission Bandwidth	10.36KHz
Peak Frequency Deviation	1.91KHz
Audio Frequency Response	3KHz
Maximum Transmitter Power	31.74dBm
Rating Power	31.76dBm (It was fixed by the manufacturer, any individual can't arbitrarily change it.)
Antenna Designation	Non-detachable
Power Supply	3.7V
Power adapter parameter	Input: AC 110~120V, 50-60Hz, 800mA Output: DC 6V, 500mA
Limiting Voltage	DC 3.15V
Operation Frequency Range and Channel	Frequency Range: 450MHz to 470MHz Channel Separation: 12.5 KHz
	Top Channel: 450.025MHz Middle Channel: 460.000MHz Bottom Channel: 469.975MHz
Frequency Tolerance	0.141ppm

1.2 RELATED SUBMITTAL(S) / GRANT (S)

This submittal(s) (test report) is intended for **FCC ID**: VO6NC3330, filing to comply with the FCC Part 90 requirements.

1.3 TEST METHODOLOGY

The radiated emission testing was performed according to the procedures of ANSI C 63.4: 2009; TIA/EIA 603 and FCC CFR 47 Rules of 2.1046, 2.1047, 2.1049, 2.1051, 2.1053, 2.1055, 2.1057.

1.4 TEST FACILITY

The test site used to collect the radiated data is located on the address of Attestation of Global Compliance (Shenzhen) Co., Ltd. 2/F., Building 2, No.1-No.4, Chaxi Sanwei Technical Industrial Park, Gushu, Xixiang, Bao'an District, Shenzhen, Guangdong, China. The test site is constructed and calibrated to meet the FCC requirements in documents ANSI C63.4: 2003.
FCC register No.: 259865

1.5 SPECIAL ACCESSORIES

Not available for this EUT intended for grant.

1.6 EQUIPMENT MODIFICATIONS

Not available for this EUT intended for grant.

2. SYSTEM TEST CONFIGURATION

2.1 EUT CONFIGURATION

The EUT configuration for testing is installed on RF field strength measurement to meet the Commission's requirement and operating in a manner which intends to maximize its emission characteristics in a continuous normal application.

2.2 EUT EXERCISE

The Transmitter was operated in the normal operating mode. The TX frequency was fixed which was for the purpose of the measurements.

2.3 GENERAL TECHNICAL REQUIREMENTS

(1). Section 15.207: Conducted Limits
(2). Section 90.205: Maximum ERP is dependent upon the station's antenna HAAT and required service area
(3). Section 90.207: Modulation Characteristic
(4). Section 90.209: Occupied Bandwidth
(5). Section 90.210: Emission Mask
(6). Section 90.213: Frequency Tolerance
(7). Section 90.214: Transient Frequency Behavior
(8). Section 15.109: Radiated Emission

2.4 CONFIGURATION OF TESTED SYSTEM

Fig. 2-1 Configuration of Tested System

Table 2-1 Equipment Used in Tested System

Item	Equipment	Model No.	Identifier	Note
1	TWO-WAY RADIO	NC-3330	FCC ID: VO6NC3330	EUT
2	POWER ADAPTER	NC-3330	Input: AC 110~120V, 50-60Hz, 800mA Output: DC 6V, 500mA	Accessory
3	DESKTOP RAPID CHARGER	NC-3330	Input: DC 6-12V Output: 500mA	Accessory
4	BATTERY	NC-3330BT	3.7V, 2000mAh	Accessory

3. SUMMARY OF TEST RESULTS

FCC Rules	Description Of Test	Result
§90.205	Maximum Transmitter Power	Compliant
§90.207	Modulation Characteristic	Compliant
§90.209	Occupied Bandwidth	Compliant
§90.210	Emission Mask	Compliant
§90.213	Frequency Tolerance	Compliant
§90.214	Transient Frequency Behavior	Compliant
§15.209	Radiated Emission	Compliant
§15.207	Conducted Emission	Compliant

4. DESCRIPTION OF TEST MODES

RF TEST MODES

The EUT (TWO-WAY RADIO) has been tested under normal operating condition. (The top channel, the middle channel and the bottom channel) are chosen for testing at each channel separation.

No.	TEST MODES	CHANNEL SEPARATION
1	Low Channel	12.5 KHz
2	Middle Channel	12.5 KHz
3	High Channel	12.5 KHz

EMC TEST MODES

No.	TEST MODES
1	Standby Mode

Note: Only the result of the worst case was recorded in the report.

5. FREQUENCY TOLERANCE

5.1 PROVISIONS APPLICABLE

a). According to FCC Part 2 Section 2.1055(a)(1), the frequency stability shall be measured with variation of ambient temperature from –30℃ to +60℃ centigrade.

b). According to FCC Part 2 Section 2.1055(d)(2), for battery powered equipment, the frequency stability shall be measured with reducing primary supply voltage to the battery operating end point, which is specified by the manufacturer.

c). According to FCC Part 90 Section 90.213, the frequency tolerance must be maintained within 0.00025% for 12.5KHz channel separation and 0.0005% for 25KHz channel separation.

5.2 MEASUREMENT PROCEDURE

5.2.1 Frequency stability versus environmental temperature

1. Setup the configuration per figure 1 for frequencies measurement inside an environment chamber, Install new battery in the EUT.
2. Turn on EUT and set SA center frequency to the EUT radiated frequency. Set SA Resolution Bandwidth to 1KHz and Video Resolution Bandwidth to 1KHz and Frequency Span to 50KHz.Record this frequency as reference frequency.
3. Set the temperature of chamber to 60℃. Allow sufficient time (approximately 30 min) for the temperature of the chamber to stabilize. While maintaining a constant temperature inside the chamber, turn the EUT on and measure the EUT operating frequency.
4. Repeat step 2 with a 10℃ decreased per stage until the lowest temperature -30℃ is measured, record all measured frequencies on each temperature step.

5.2.2 Frequency stability versus input voltage

1. Setup the configuration per figure 1 for frequencies measured at temperature if it is within 15℃ to 25℃. Otherwise, an environment chamber set for a temperature of 20℃ shall be used. The EUT shall be powered by DC 3.7 V
2. Set SA center frequency to the EUT radiated frequency. Set SA Resolution Bandwidth to 1 KHz and Video Resolution Bandwidth to 1KHz. Record this frequency as reference frequency.
3. Supply the EUT primary voltage at the operating end point which is specified by manufacturer and record the frequency.

5.3 TEST SETUP BLOCK DIAGRAM

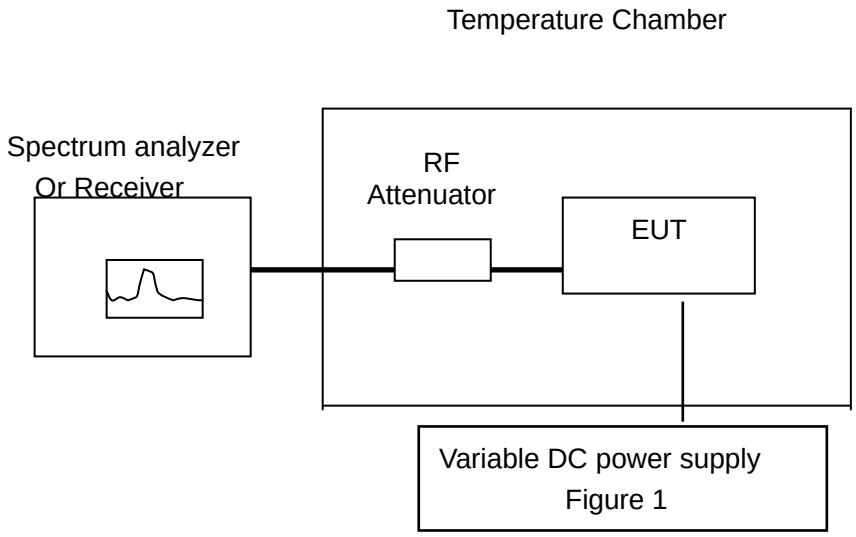

Figure 1

5.4 TEST EQUIPMENT USED:

NAME OF EQUIPMENT	MANUFACTURER	MODEL	SERIAL NUMBER	Cal. Date	Cal. Due
Receiver	R&S	ESCI	N/A	07/17/2013	07/16/2014
Climate Chamber	EXPERY	TN-400	N/A	07/17/2013	07/16/2014

5.5 TEST RESULT

(1) Frequency stability versus input voltage (Supply nominal voltage is 3.70V)

Bottom Channel @ 12.5 KHz Channel Separation

Reference Frequency:	450.025 MHz	Limit:	2.5ppm
Envionment Temperature	Power Supply	Frequency Deviation	
(℃)	(V)	(MHz)	ppm
50	3.70 V	450.025045	0.100
40	3.70 V	450.025036	0.080
30	3.70 V	450.025024	0.053
20	3.70 V	450.025017	0.038
10	3.70 V	450.025028	0.062
0	3.70 V	450.025038	0.084
-10	3.70 V	450.025044	0.098
-20	3.70 V	450.025057	0.127
-30	3.70 V	450.025064	0.142

Middle Channel @ 12.5 KHz Channel Separation

Reference Freque	460.000 M	Limit:	2.5ppm
Envionment Tempe	Power Supply	Frequency Deviatio	
(℃)	(V)	(MHz)	ppm
50	3.70 V	460.000053	0.115
40	3.70 V	460.000046	0.100
30	3.70 V	460.000034	0.074
20	3.70 V	460.000027	0.059
10	3.70 V	460.000035	0.076
0	3.70 V	460.000033	0.072
-10	3.70 V	460.000045	0.098
-20	3.70 V	460.000052	0.113
-30	3.70 V	460.000056	0.122

Top Channel @ 12.5 KHz Channel Separation

Reference Frequency:	469.975 MHz	Limit:	2.5ppm
Envionment Temperature	Power Supply	Frequency Deviation	
(℃)	(V)	(MHz)	ppm
50	3.70 V	469.975055	0.117
40	3.70 V	469.975042	0.089
30	3.70 V	469.975034	0.072
20	3.70 V	469.975026	0.055
10	3.70 V	469.975024	0.051
0	3.70 V	469.975036	0.077
-10	3.70 V	469.975045	0.096
-20	3.70 V	469.975052	0.111
-30	3.70 V	469.975065	0.138

(2) Frequency stability versus input voltage (Battery limiting voltage is 3.15V)

Bottom Channel @ 12.5 KHz Channel Separation

Reference Frequency:	450.025MHz	Limit:	2.5ppm
Envionment Temperature	Power Supply	Frequency Deviation	
(℃)	(V)	(MHz)	ppm
50	DC 3.15 V	450.025053	0.118
40	DC 3.15 V	450.025045	0.100
30	DC 3.15 V	450.025036	0.080
20	DC 3.15 V	450.025027	0.060
10	DC 3.15 V	450.025033	0.073
0	DC 3.15 V	450.025046	0.102
-10	DC 3.15 V	450.025053	0.118
-20	DC 3.15 V	450.025065	0.144
-30	DC 3.15 V	450.025077	0.171

Middle Channel @ 12.5 KHz Channel Separation

Reference Freque	460.000 M	Limit:	2.5ppm
Envionment Tempe	Power Supply	Frequency Deviatio	
(℃)	(V)	(MHz)	ppm
50	DC 3.15 V	460.000065	0.141
40	DC 3.15 V	460.000056	0.122
30	DC 3.15 V	460.000037	0.080
20	DC 3.15 V	460.000024	0.052
10	DC 3.15 V	460.000036	0.078
0	DC 3.15 V	460.000043	0.093
-10	DC 3.15 V	460.000055	0.120
-20	DC 3.15 V	460.000067	0.146
-30	DC 3.15 V	460.000077	0.167

Top Channel @ 12.5 KHz Channel Separation

Reference Frequency:	469.975 MHz	Limit:	2.5ppm
Envionment Temperature	Power Supply	Frequency Deviation	
(℃)	(V)	(MHz)	ppm
50	DC 3.15 V	469.975055	0.117
40	DC 3.15 V	469.975047	0.100
30	DC 3.15 V	469.975033	0.070
20	DC 3.15 V	469.975025	0.053
10	DC 3.15 V	469.975036	0.077
0	DC 3.15 V	469.975044	0.094
-10	DC 3.15 V	469.975053	0.113
-20	DC 3.15 V	469.975066	0.140
-30	DC 3.15 V	469.975074	0.157

(3) Frequency stability versus input voltage (Battery Fully Charged voltage is 4.26V)

Bottom Channel @ 12.5 KHz Channel Separation

Reference Frequency:	450.025 MHz	Limit:	2.5ppm
Envionment Temperature	Power Supply	Frequency Deviation	
(℃)	(V)	(MHz)	ppm
50	DC 4.26 V	450.025044	0.098
40	DC 4.26 V	450.025037	0.082
30	DC 4.26 V	450.025025	0.056
20	DC 4.26 V	450.025017	0.038
10	DC 4.26 V	450.025026	0.058
0	DC 4.26 V	450.025035	0.078
-10	DC 4.26 V	450.025043	0.096
-20	DC 4.26 V	450.025056	0.124
-30	DC 4.26 V	450.025066	0.147

Middle Channel @ 12.5 KHz Channel Separation

Reference Freque	460.000 M	Limit:	2.5ppm
Envionment Tempe	Power Supply	Frequency Deviatio	
(℃)	(V)	(MHz)	ppm
50	DC 4.26 V	460.000068	0.148
40	DC 4.26 V	460.000054	0.117
30	DC 4.26 V	460.000037	0.080
20	DC 4.26 V	460.000025	0.054
10	DC 4.26 V	460.000036	0.078
0	DC 4.26 V	460.000044	0.096
-10	DC 4.26 V	460.000053	0.115
-20	DC 4.26 V	460.000067	0.146
-30	DC 4.26 V	460.000085	0.185

Top Channel @ 12.5 KHz Channel Separation

Reference Frequency:	469.975 MHz	Limit:	2.5ppm
Envionment Temperature	Power Supply	Frequency Deviation	
(℃)	(V)	(MHz)	ppm
50	DC 4.26 V	469.975057	0.121
40	DC 4.26 V	469.975045	0.096
30	DC 4.26 V	469.975034	0.072
20	DC 4.26 V	469.975025	0.053
10	DC 4.26 V	469.975032	0.068
0	DC 4.26 V	469.975045	0.096
-10	DC 4.26 V	469.975055	0.117
-20	DC 4.26 V	469.975071	0.151
-30	DC 4.26 V	469.975085	0.181

6. EMISSION BANDWIDTH

6.1 PROVISIONS APPLICABLE

According to FCC Part 90 Section 90.209: The authorized bandwidth shall be 11.25 KHz for 12.5 KHz and 20 KHz for 25 KHz

6.2 MEASUREMENT PROCEDURE

1). The EUT was placed on a turn table which is 0.8m above ground plane.

2). The EUT was modulated by 2.5 KHz Sine wave audio signal, The level of the audio signal employed is 16 dB greater than that necessary to produce 50% of rated system deviation. Rated system deviation is 2.5 kHz (12.5 kHz channel spacing) and 5 kHz (25 kHz channel spacing).

3). Set SPA Center Frequency = fundamental frequency, RBW=VBW= 300 Hz, Span =50 KHz.

4). Set SPA Max hold. Mark peak, -26 dB.

6.3 TEST SETUP BLOCK DIAGRAM

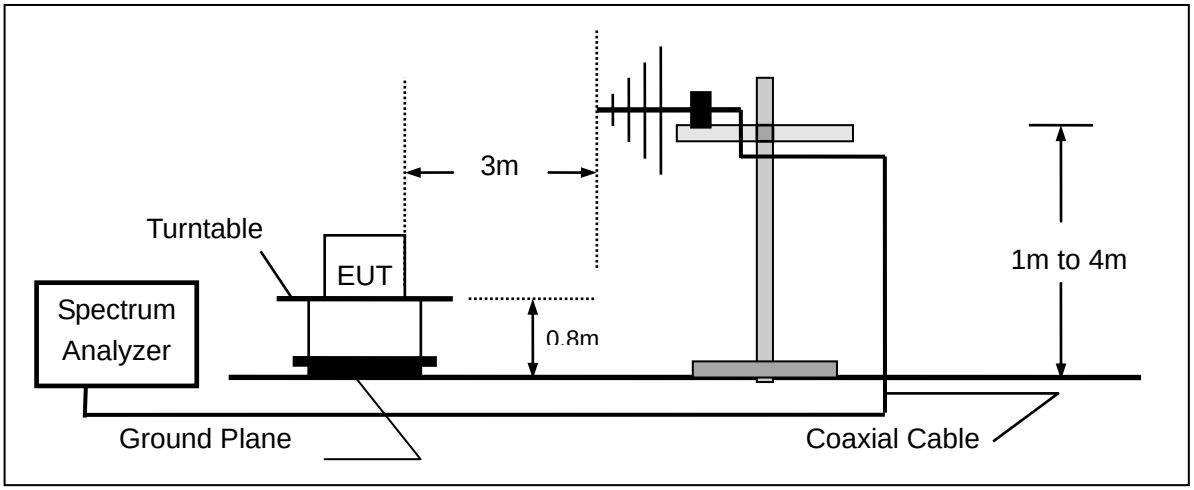

6.4 MEASUREMENT EQUIPMENT USED:

NAME OF EQUIPMENT	MANUFACTURER	MODEL	SERIAL NUMBER	Cal. Date	Cal. Due
SPECTRUM ANALYZER	AGILENT	E4440A	US44300399	07/17/2013	07/16/2014
MODULATION ANALYZER	HP	8920B	3104A03367	07/17/2013	07/16/2014
BROADBAND ANT.	A.H.	SAS-521-4	A0304224	06/07/2013	06/06/2014

6.5 MEASUREMENT RESULT:

26 dB Bandwidth Measurement Result			
Operating Frequency	12.5 KHz Channel Separation		
	Test Data	Limits	Result
450.025MHz	10.25 KHz	11.25 KHz	Pass
460.000MHz	10.36 KHz	11.25 KHz	Pass
469.975MHz	10.21 KHz	11.25 KHz	Pass

Occupied bandwidth of Middle Channel (Maximum) @ 12.5 KHz Channel Separation

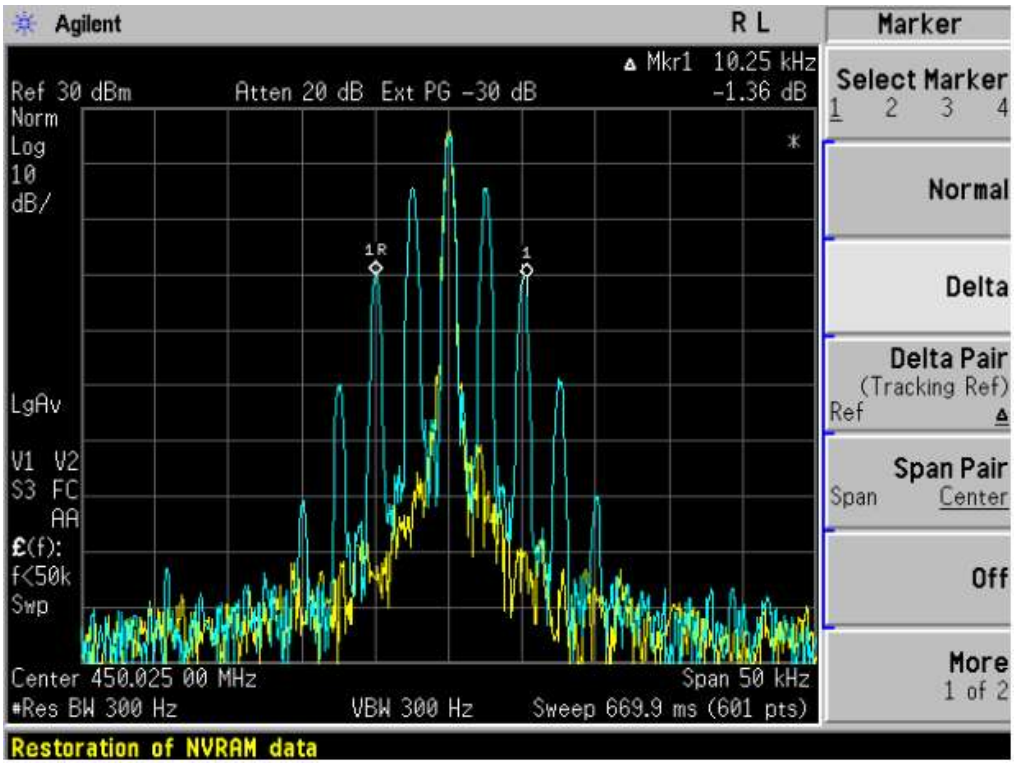

7. UNWANTED RADIATION

7.1 PROVISIONS APPLICABLE

8.1.1 According to Section 90.210, the power of each unwanted emission shall be less than Transmitted Power as specified below for transmitters designed to operate with 12.5 KHz channel bandwidth:

(1).On any frequency removed from the center of the authorized bandwidth fo to 5.625 KHz removed from fo: Zero dB

(2).On any frequency removed from the center of the authorized bandwidth by a displacement frequency(fd in KHz)fo of more than 5.625 KHz but no more than 12.5 KHz: At least 7.27(fd-2.88 KHz) dB

(3).On any frequency removed from the center of the authorized bandwidth by a displacement Frequency (fd in KHz)fo of more than 12.5 KHz: At least 50+10 log(P) dB or 70 dB, which ever is lesser attenuation.

8.1.2 According to Section 90.210, Emission mask B. For transmitters designed to transmit with 25 KHz channel separation and equipped with an audio low-pass filter, the power of any emission must be attenuated below the unmodulated carrier power (P) as following:

(1), On any frequency removed from the assigned frequency by more than 50 percent, but no more than 100 percent of the authorized bandwidth: At least 25 dB.

(2), On any frequency removed from the assigned frequency by more than 100 percent, but no more than 250 percent of the authorized bandwidth: At least 35 dB.

(3), On any frequency removed from the assigned frequency by more than 250 percent of the authorized bandwidth: At least 43+10Log(P) dB.

7.2 MEASUREMENT PROCEDURE

(1)On a test site, the EUT shall be placed on a turntable, and in the position closest to the normal use as declared by the user.

(2)The test antenna shall be oriented initially for vertical polarization located 3m from the EUT to correspond to the transmitter.

(3)The output of the antenna shall be connected to the measuring receiver and either a peak or quasi-peak detector was used for the measurement as indicated on the report. The detector selection is based on how close the emission level was approaching the limit.

(4)The transmitter shall be switched on; if possible, without the modulation and the measurement receiver shall be tuned to the frequency of the transmitter under test.

(5)The test antenna shall be raised and lowered through the specified range of height until the measuring receiver detects a maximum signal level.

(6)The transmitter shall than be rotated through 360°in the horizontal plane, until the maximum signal level is detected by the measuring receiver.

(7)The test antenna shall be raised and lowered again through the specified range of height until the measuring receiver detects a maximum signal level.

(8)The maximum signal level detected by the measuring receiver shall be noted.

(9)The measurement shall be repeated with the test antenna set to horizontal polarization.

(10) Replace the antenna with a proper Antenna (substitution antenna).

(11)The substitution antenna shall be oriented for vertical polarization and, if necessary, the length of the substitution antenna shall be adjusted to correspond to the frequency of transmitting.

(12)The substitution antenna shall be connected to a calibrated signal generator.

(13)If necessary, the input attenuator setting of the measuring receiver shall be adjusted in order to increase the sensitivity of the measuring receiver.

(14)The test antenna shall be raised and lowered through the specified range of the height to ensure that the maximum signal is received.

(15)The input signal to substitution antenna shall be adjusted to the level that produces a level detected by the measuring receiver, that is equal to the level noted while the transmitter radiated power was measured, corrected for the change of input attenuation setting of the measuring receiver.

(16)The input level to the substitution antenna shall be recorded as power level in dBm, corrected for any change of input attenuator setting of the measuring receiver.

(17)The measurement shall be repeated with the test antenna and the substitution antenna oriented for horizontal polarization.

7.3 TEST SETUP BLOCK DIAGRAM

SUBSTITUTION METHOD: (Radiated Emissions)

Radiated Below 1GHz

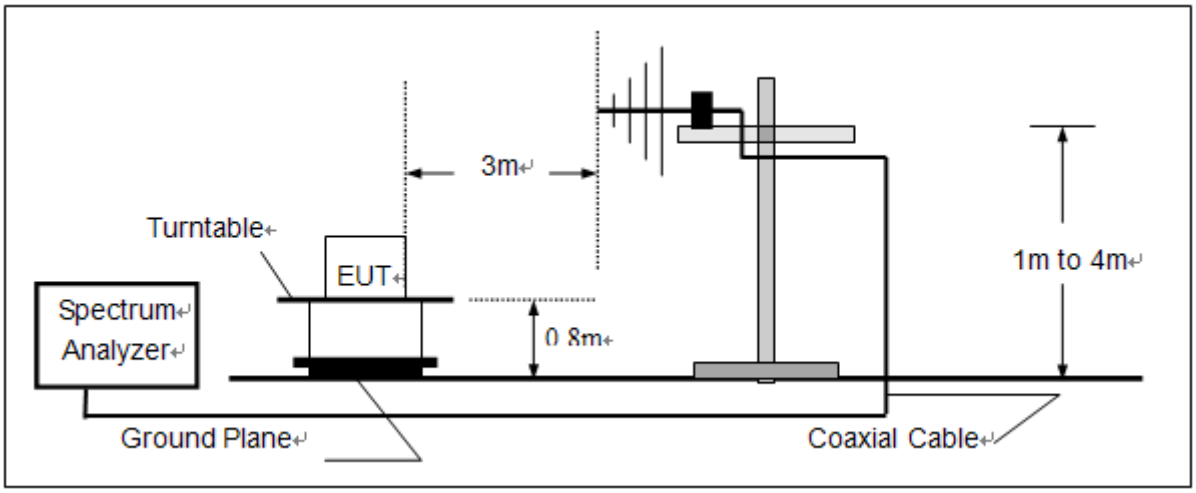

Radiated Above 1 GHz

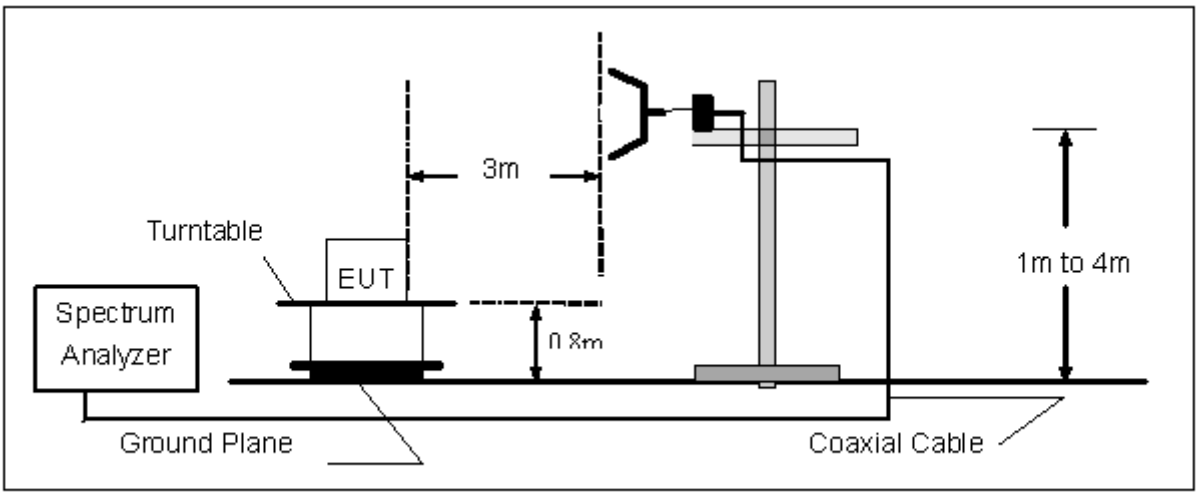

7.4 MEASUREMENT EQUIPMENT USED:

NAME OF EQUIPMENT	MANUFACTURER	MODEL	SERIAL NUMBER	Cal. Date	Cal. Due
SPECTRUM ANALYZER	AGILENT	E4440A	US44300399	07/18/2012	07/17/2013
TEST RECEIVER	R&S	ESIC	A0304218	07/18/2012	07/17/2013
LOOP ANTENNA	A.H.	SAS-562B	A0304220	07/18/2012	07/17/2013
HORN ANT.	EM	EM-AH-10180	100150	04/21/2012	04/20/2013
BROADBAND ANT.	A.H.	SAS-521-4	06/08/2012	06/07/2013	06/08/2012

7.5 MEASUREMENT RESULTS:

Measurement Result for 12.5 KHz Channel Separation-1W

On any frequency removed from the center of the authorized bandwidth by a displacement Frequency (fd in KHz)fo of more than 12.5 KHz: At least 50+10 log(P) dB or 70 dB, which ever is lesser attenuation.

Limit: At least 50+10 log (P) =50+10log (1) =50

THE WORST RADIATED SPURIOUS EMISSION OF ALL TEST DATA

Measurement Result for 12.5 KHz Channel Separation @ 450.025MHz

Emission Frequency (MHz)	Ant. Polarity(H/V)	Measurement Result Below carrier(dBc)	Limit	Result(P/F)
450.025	v	0		pass
900.050	v	56.32(-26.32)	53	pass
1350.08	v	58.43(28.43)	53	pass
1800.100	v	61.25	53	pass
2250.125	v	63.88	53	pass
2700.150	v	65.37	53	pass
3150.175	v	68.44	53	pass
3600.200	v	70.66	53	pass
4050.225	v	74.36	53	pass
4500.250	v	76.52	53	pass

Measurement Result for 12.5 KHz Channel Separation @ 460.000MHz

Emission Frequency (MHz)	Ant. Polarity(H/V)	Measurement Result Below carrier(dBc)	Limit	Result(P/F)
460.000	v	0		pass
920.000	v	58.52(28.52)	53	pass
1380.000	v	61.36	53	pass
1840.000	v	63.88	53	pass
2300.000	v	65.96	53	pass
2760.000	v	67.87	53	pass
3220.000	v	70.14	53	pass
3680.000	v	72.42	53	pass
4140.000	v	75.66	53	pass
4600.000	v	77.33	53	pass

Measurement Result for 12.5 KHz Channel Separation @ 469.975MHz

Emission Frequency (MHz)	Ant. Polarity(H/V)	Measurement Result Below carrier(dBc)	Limit	Result(P/F)
469.975	v	0		pass
939.950	v	60.32	53	pass
1409.925	v	61.58	53	pass
1879.900	v	63.29	53	pass
2349.875	v	65.32	53	pass
2819.850	v	68.93	53	pass
3289.825	v	70.89	53	pass
3759.800	v	71.25	53	pass
4229.775	v	73.22	53	pass
4699.750	v	78.36	53	pass

Notes: *The emissions were scanned from 30 MHz to 10th harmonic*

7.6 EMISSION MASK PLOT

The detailed procedure employed for Emission Mask measurements are specified as following:

- The transmitter shall be modulated by a 2.5 kHz audio signal,
- The level of the audio signal employed is 16 dB greater than that necessary to produce 50% of rated system deviation. Rated system deviation is 2.5 kHz (12.5 kHz channel spacing).

The Worst Emission Mask for 12.5 KHz channel Separation

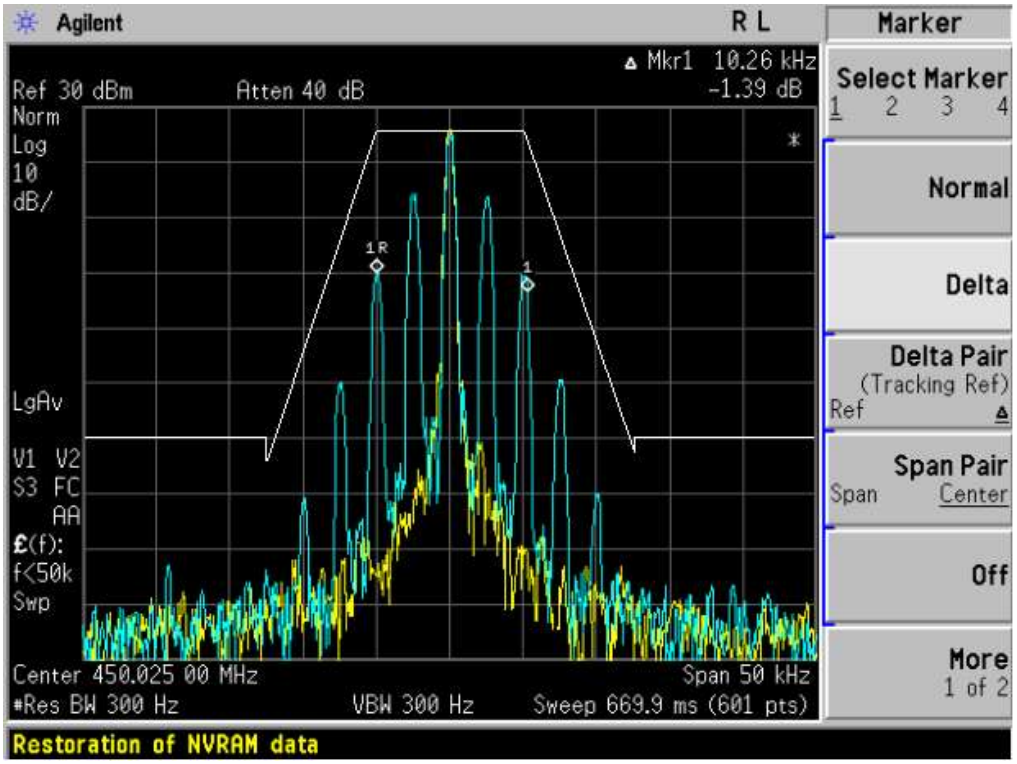

8. MODULATION CHARACTERISTICS

8.1 PROVISIONS APPLICABLE

According to CFR 47 section 2.1047(a), for Voice Modulation Communication Equipment, the frequency response of the audio modulation circuit over a range of 100 to 5000Hz shall be measured.

8.2 MEASUREMENT METHOD

8.2.1 Modulation Limit

(1). Configure the EUT as shown in figure 1, adjust the audio input for 60% of rated system deviation at 1KHz using this level as a reference (0dB) and vary the input level from –20 to +20dB. Record the frequency deviation obtained as a function of the input level.

(2). Repeat step 1 with input frequency changing to 300, 1000, 1500 and 3000Hz in sequence.

8.2.2 Audio Frequency Response

(1). Configure the EUT as shown in figure 1.

(2). Adjust the audio input for 20% of rated system deviation at 1 KHz using this level as a reference (0 dB).

(3). Vary the Audio frequency from 100 Hz to 10 KHz and record the frequency deviation.

(4). Audio Frequency Response = 20log10 (Deviation of test frequency/Deviation of 1 KHz reference).

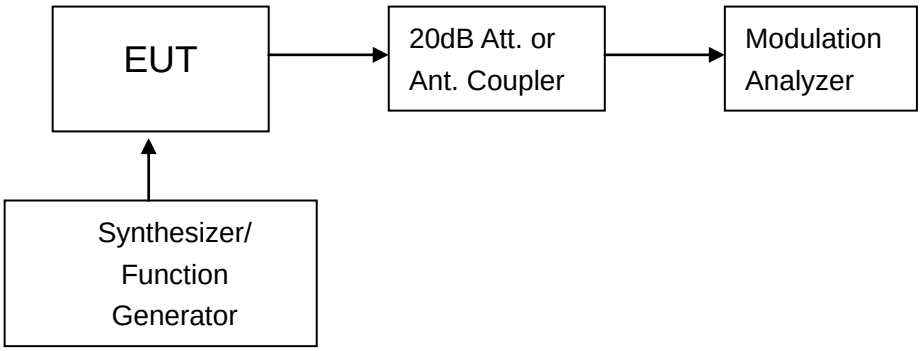

Figure 1: Modulation characteristic measurement configuration

8.3 MEASUREMENT INSTRUMENTS

NAME OF EQUIPMENT	MANUFACTURER	MODEL	SERIAL NUMBER	Cal. Date	Cal. Due
Modulation Analyzer	HP	8920B	3104A03367	07/17/2013	07/16/2014

NOTE: 8920B can generate audio modulation frequency.

8.4 MEASUREMENT RESULT

(a). Modulation Limit:

Middle Channel @ 12.5 KHz Channel Separations

Modulation Level (dB)	Peak Freq. Deviation At 300 Hz	Peak Freq. Deviation At 1000 Hz	Peak Freq. Deviation At 1500 Hz	Peak Freq. Deviation At 3000 Hz
-20	0.18	0.85	0.91	0.93
-15	0.31	0.95	0.98	1.16
-10	0.41	1.21	1.36	1.45
-5	0.55	1.33	1.47	1.56
0	0.63	1.50	1.59	1.63
+5	0.75	1.62	1.66	1.87
+10	0.83	1.74	1.77	1.91
+15	0.92	1.63	1.76	1.85
+20	0.88	1.58	1.65	1.78

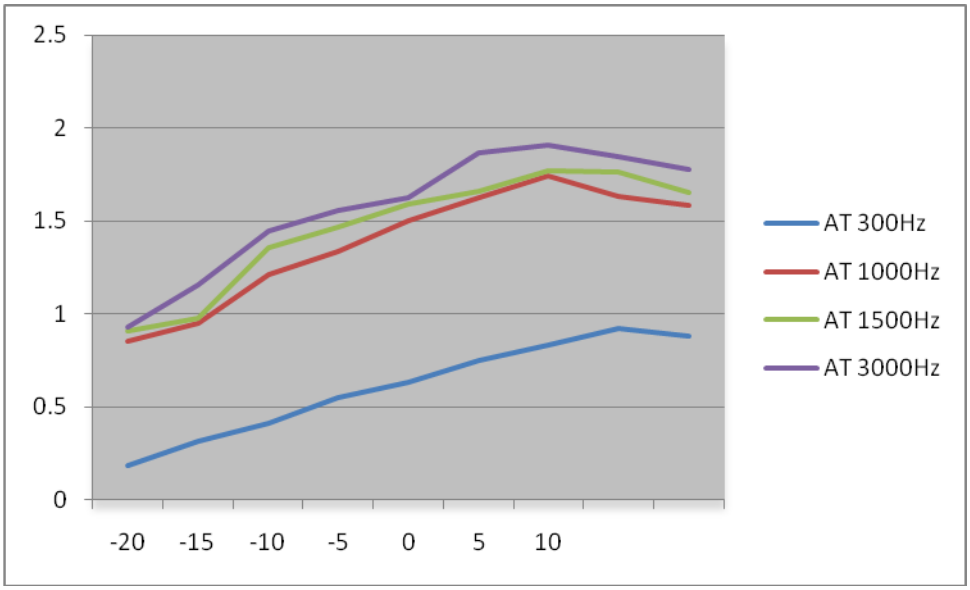

(b). Audio Frequency Response:

Middle Channel @ 12.5 KHz Channel Separations

Frequency (Hz)	Deviation (KHz)	Audio Frequency Response(dB)
100	--	--
200	--	--
300	0.15	-10.46
400	0.21	-7.54
500	0.28	-5.04
600	0.32	-3.88
700	0.35	-3.10
800	0.38	-2.38
900	0.43	-1.31
1000	0.54	0.67
1200	0.62	1.87
1400	0.67	2.54
1600	0.75	3.52
1800	0.86	4.71
2000	0.93	5.39
2400	1.27	8.10
2500	1.47	9.37
2800	1.65	10.37
3000	1.78	11.03
3200	1.76	10.93
3600	1.58	9.99
4000	1.16	7.31
4500	0.98	5.85
5000	0.76	3.64
5500	0.57	1.14
6000	0.17	-9.37
6500	0.08	-15.92
7000	0.04	-21.94
7500	0.02	-27.96
9000	--	--
10000	--	--
14000	--	--
18000	--	--
20000	--	--
30000	--	--

Frequency Response of Middle Channel

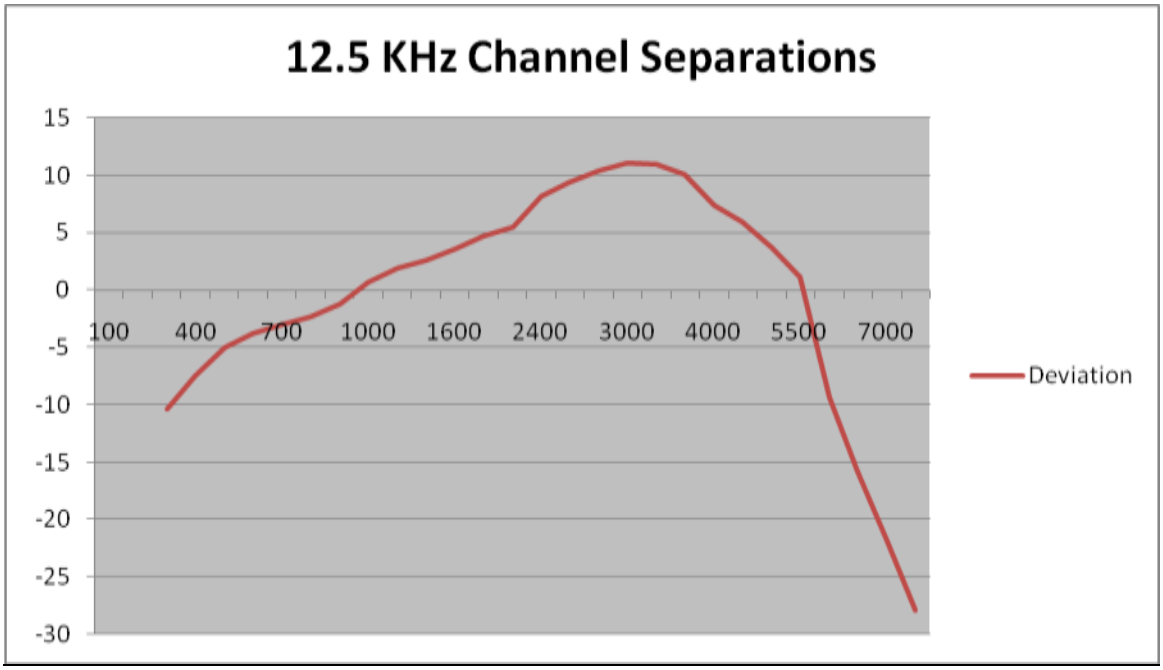

9. MAXIMUMN TRANSMITTER POWER

9.1 PROVISIONS APPLICABLE

Per FCC §2.1046, §90.205: Maximum ERP is dependent upon the station's antenna HAAT and required service area.

9.2 TEST PROCEDURE

RF power is measured as ERP as the antenna is permanently attached. The substitution method was used. With a nominal battery voltage, and the transmitter properly adjusted the RF output measures:

Test Setup Diagram:

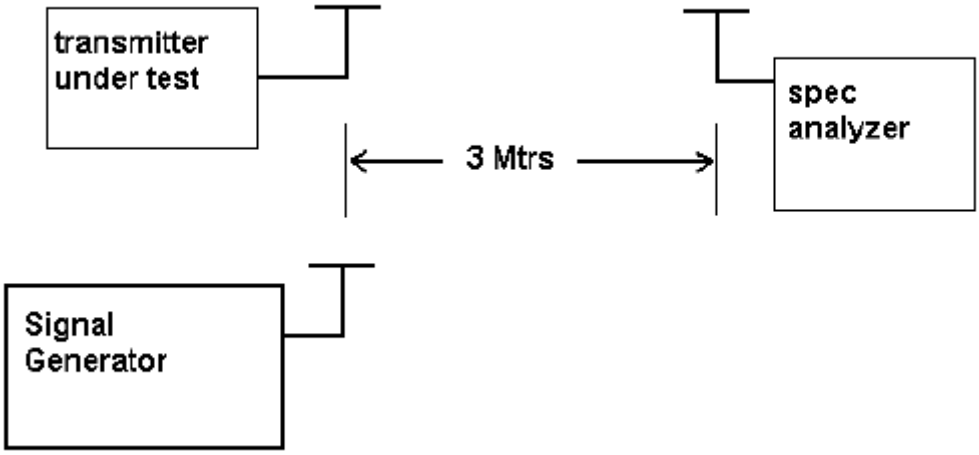

9.3 TEST RESULT

Power Measurement Results		
Channel Separation	**Channel**	**Measurement Result (dBm)**
		For 31.76dBm(1.5W)
12.5 KHz	Bottom(450.025MHz)	31.72
	Middle(460.000MHz)	31.68
	Top (469.975MHz)	31.74

9.4 CONDUCT SPURIOUS PLOT

Note: *All the modes and power (Hi and Lo) had been tested, but only the worst data recorded in the report.*

Conducted Spurious Emission(worst) @ Low Channel (30MHz-1GHz)

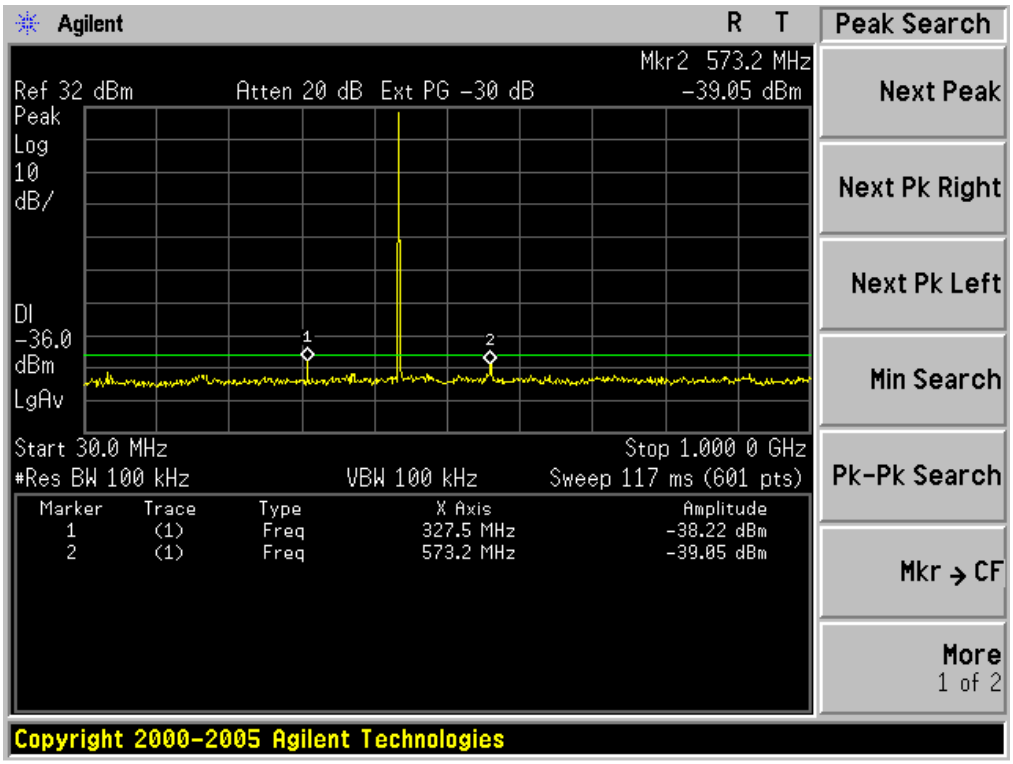

Conduct Spurious Emission(worst) @ Low Channel (1GHz-12.75GHz)

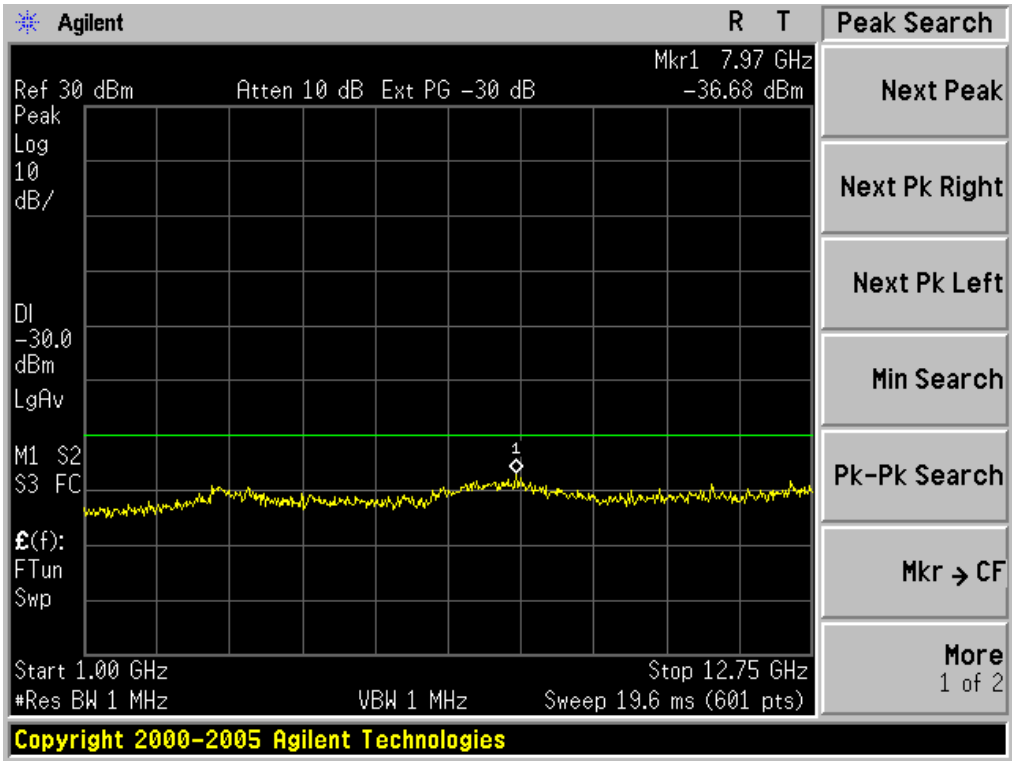

10. RANSMITTER FREQUENCY BEHAVIOR

10.1PROVISIONS APPLICABLE

Section 90.214

Time intervals [1, 2]	Maximum frequency difference [3]	All equipment	
		150 to 174 MHz	421 to 512 MHz
Transient Frequency Behavior for Equipment Designed to Operate on 25 kHz Channels			
t_1 [4]	± 25.0 kHz	5.0 ms	10.0 ms
t_2	± 12.5 kHz	20.0 ms	25.0 ms
t_3 [4]	± 25.0 kHz	5.0 ms	10.0 ms
Transient Frequency Behavior for Equipment Designed to Operate on 12.5 kHz Channels			
t_1 [4]	± 12.5 kHz	5.0 ms	10.0 ms
t_2	± 6.25 kHz	20.0 ms	25.0 ms
t_3 [4]	± 12.5 kHz	5.0 ms	10.0 ms
Transient Frequency Behavior for Equipment Designed to Operate on 6.25 kHz Channels			
t_1 [4]	± 6.25 kHz	5.0 ms	10.0 ms
t_2	± 3.125 kHz	20.0 ms	25.0 ms
t_3 [4]	± 6.25 kHz	5.0 ms	10.0 ms

[1] t_{on} is the instant when a 1 kHz test signal is completely suppressed, including any capture time due to phasing.
t_1 is the time period immediately following t_{on}.
t_2 is the time period immediately following t_1.
t_3 is the time period from the instant when the transmitter is turned off until t_{off}.
t_{off} is the instant when the 1 kHz test signal starts to rise.
[2] During the time from the end of t_2 to the beginning of t_3, the frequency difference must not exceed the limits specified in §90.213.
[3] Difference between the actual transmitter frequency and the assigned transmitter frequency.
[4] If the transmitter carrier output power rating is 6 watts or less, the frequency difference during this time period may exceed the maximum frequency difference for this time period.

10.2TEST METHOD

TIA/EIA-603 2.2.19

10.3TEST INSTRUMENTS

NAME OF EQUIPMENT	MANUFACTURER	MODEL	SERIAL NUMBER	Cal. Date	Cal. Due
Signal Generator	AGILENT	E4412B	LR114196	07/17/2013	07/16/2014
Storage Oscilloscope	Tektronix	TDS3052	B017447	07/17/2013	07/16/2014

10.4 DESCRIBE LIMIT LINE OF RANSMITTER FREQUENCY BEHAVIOR

ton: The switch-on instant ton of a transmitter is defined by the condition when the output power, measured at the antenna terminal, exceeds 0,1 % of the full output power (-30 dBc).

t1: period of time starting at ton and finishing according to above 10.1

t2: period of time starting at the end of t1 and finishing according to above 10.1

toff: switch-off instant defined by the condition when the output power falls below 0,1 % of the full output power (-30 dBc).

t3: period of time that finishing at toff and starting according to above 10.1

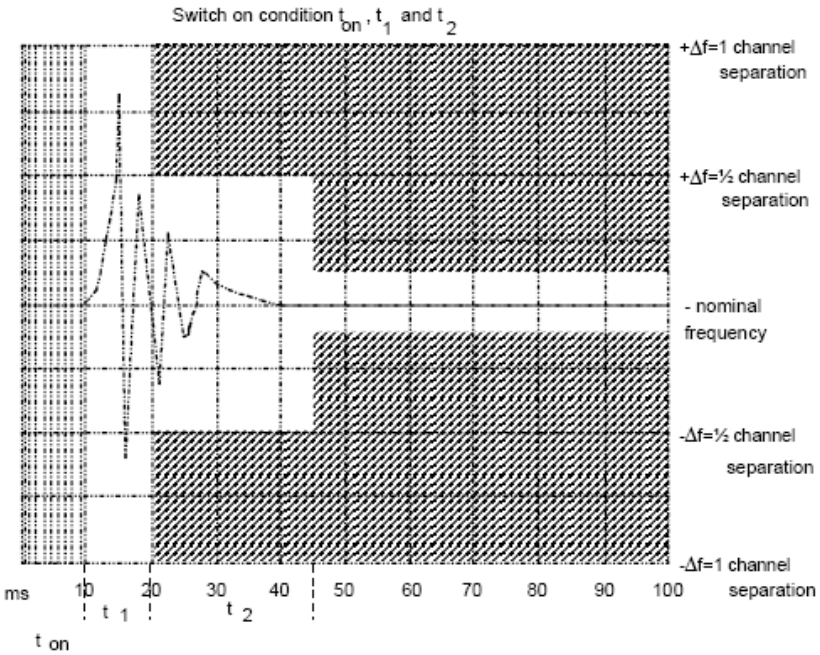

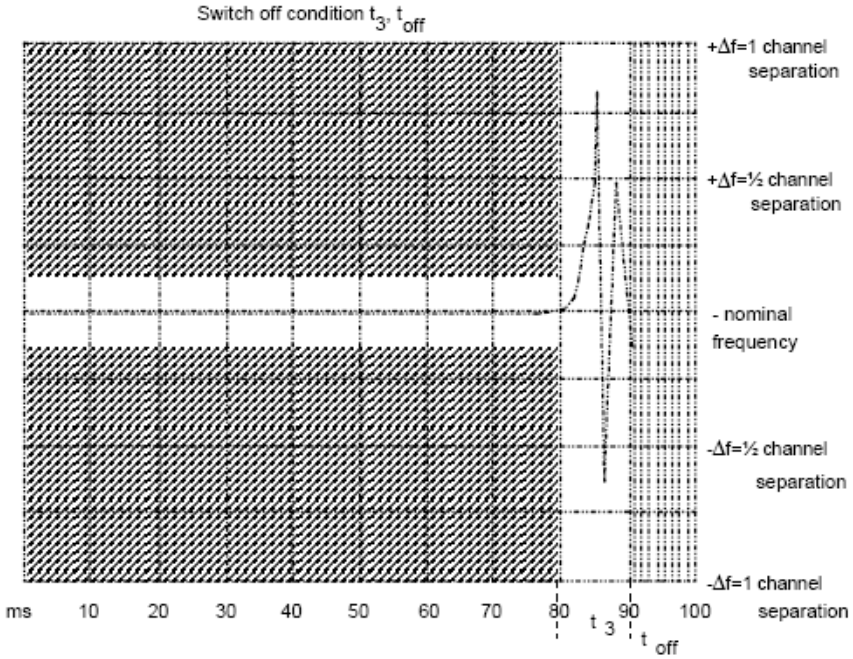

10.5 MEASURE RESULT

Transmitter Frequency Behaviour @ 12.5 KHz Channel Separation--Off to On

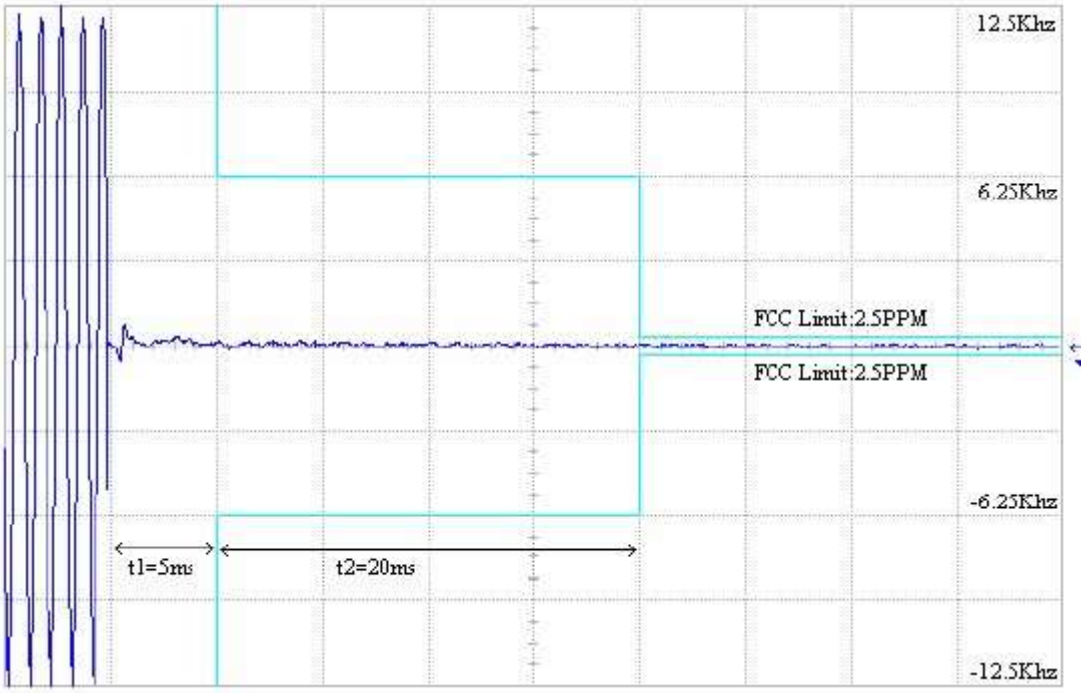

Transmitter Frequency Behaviour @ 12.5 KHz Channel Separation--On to Off

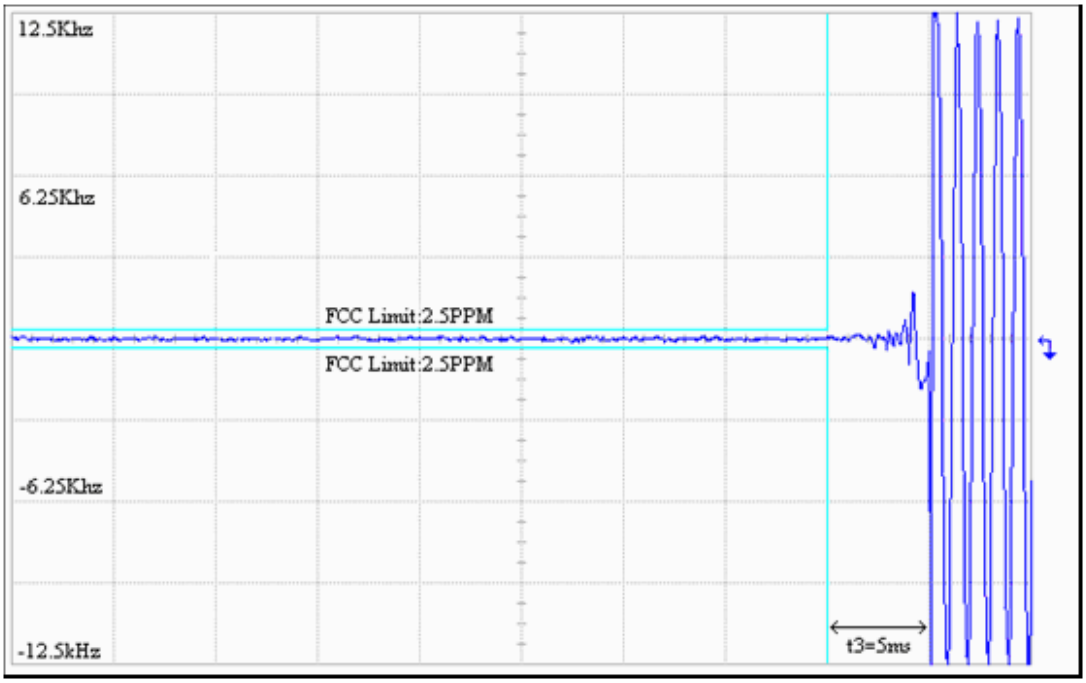

11. RADIATED EMISSION ON RECEIVING MODE

11.1 PROVISIONS APPLICABLE

FCC Part 15 Section 15.209

11.2 TEST METHOD

ANSI C 63.4: 2003

11.3 TEST INSTRUMENTS

NAME OF EQUIPMENT	MANUFACTURER	MODEL	SERIAL NUMBER	Cal. Date	Cal. Due
SPECTRUM ANALYZER	AGILENT	E4440A	US44300399	07/17/2013	07/16/2014
TEST RECEIVER	R&S	ESIC	A0304218	07/17/2013	07/16/2014
LOOP ANTENNA	A.H.	SAS-562B	N/A	07/17/2013	07/16/2014
HORN ANT.	EM	EM-AH-10180	100150	04/20/2013	04/19/2014
BROADBAND ANT.	A.H.	SAS-521-4	A0304224	06/07/2013	06/06/2014

11.4 MEASURE RESULT (MEASURED AT 3M USING FCC PART15 B LIMITS)

RADIATED EMISSION TEST RESULTS – HORIZONTAL (30MHz-1GHz)

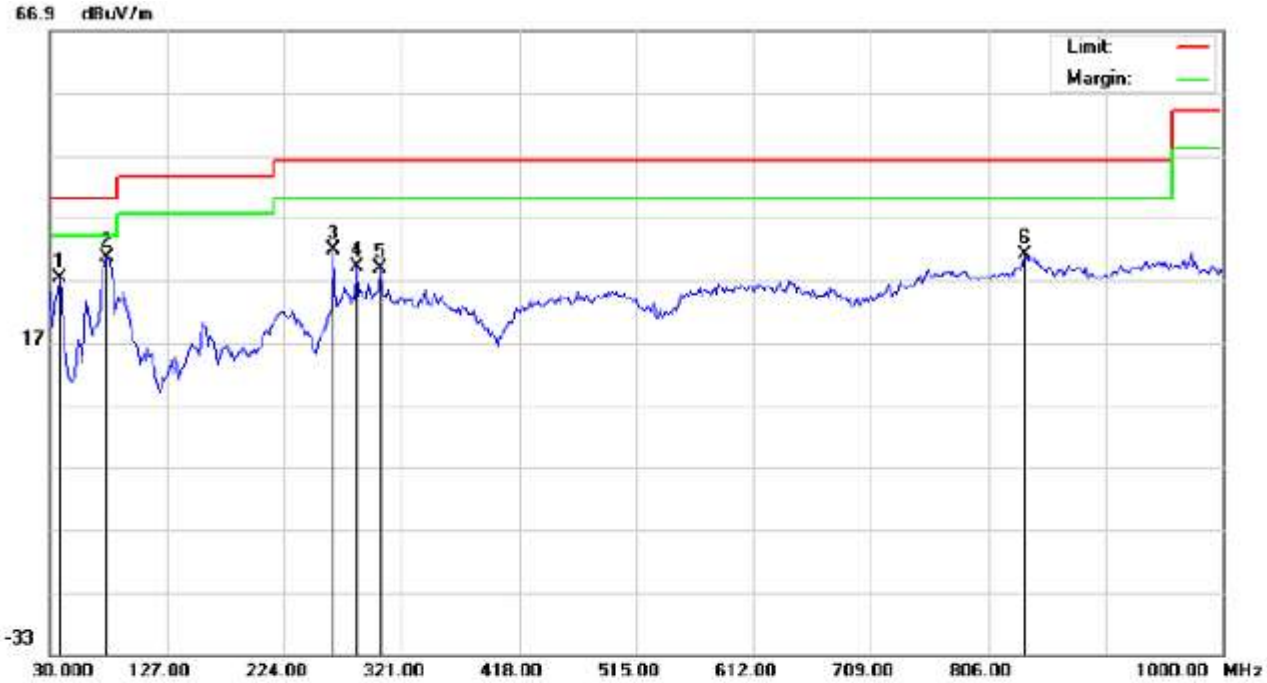

Site: site #1
Limit: FCC Class B 3M Radiation
EUT: TWO WAY RADIO
M/N: NC-3330
Mode: Mode 1
Note:

Polarization: *Horizontal*
Power:
Distance: 3M

Temperature: 26
Humidity: 60 %

No.	Mk	Freq.	Reading	Factor	Measurement	Limit	Over	Detector	Antenna Height	Table Degree	Comment
		MHz	dBuV	dB/m	dBuV/m	dBuV/m	dB		cm	degree	
1		38.0833	17.80	9.37	27.17	40.00	-12.83	peak			
2	*	76.8833	23.57	7.00	30.57	40.00	-9.43	peak			
3		264.4166	17.04	14.71	31.75	46.00	-14.25	peak			
4		283.8167	11.84	17.16	29.00	46.00	-17.00	peak			
5		303.2167	11.58	17.21	28.79	46.00	-17.21	peak			
6		836.7166	0.13	30.81	30.94	46.00	-15.06	peak			

RADIATED EMISSION TEST RESULTS – VERTICAL (30MHz-1GHz)

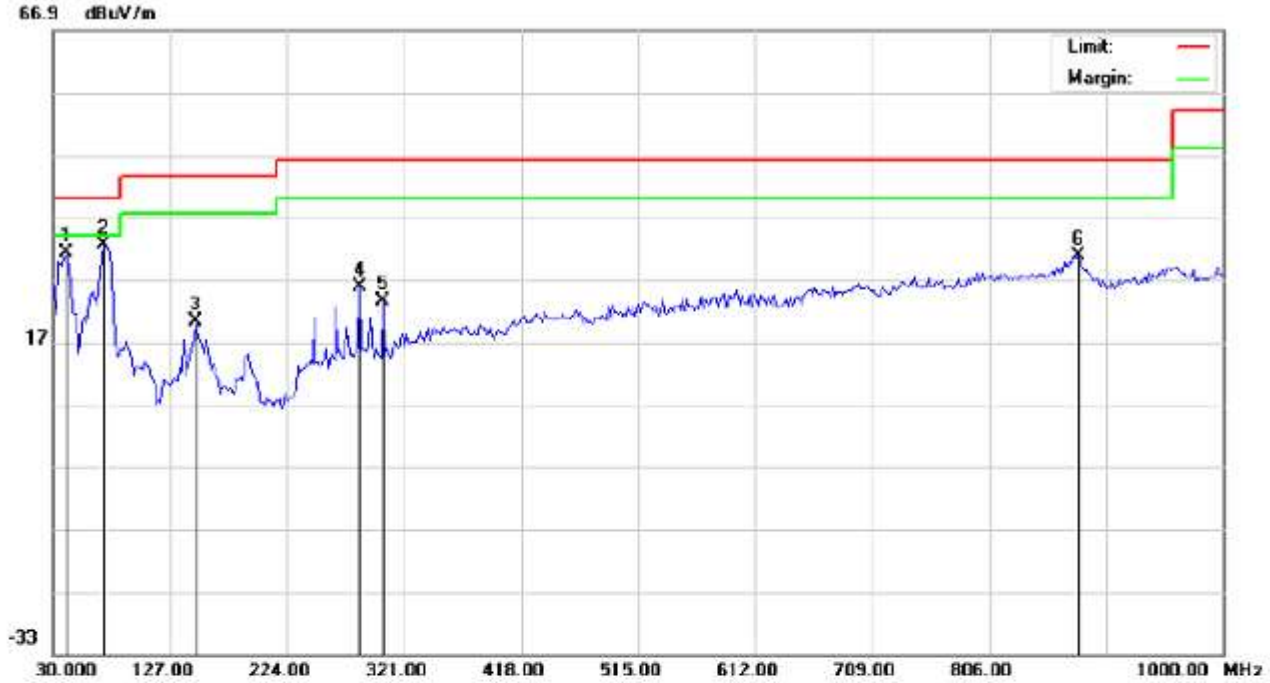

Site: site #1
Limit: FCC Class B 3M Radiation
EUT: TWO WAY RADIO
M/N: NC-3330
Mode: Mode 1
Note:

Polarization: ***Vertical***
Power:
Distance: 3M

Temperature: 26
Humidity: 60 %

No.	Mk.	Freq.	Reading	Factor	Measurement	Limit	Over	Detector	Antenna Height	Table Degree	Comment
		MHz	dBuV	dB/m	dBuV/m	dBuV/m	dB		cm	degree	
1		41.3167	24.38	6.79	31.17	40.00	-8.83	peak			
2	*	72.0333	27.71	4.84	32.55	40.00	-7.45	peak			
3		148.0166	6.57	13.72	20.29	43.50	-23.21	peak			
4		283.8167	8.56	17.16	25.72	46.00	-20.28	peak			
5		303.2167	6.33	17.21	23.54	46.00	-22.46	peak			
6		880.3667	0.43	30.35	30.78	46.00	-15.22	peak			

12. CONDUCTED LIMITS

12.1 PROVISIONS APPLICABLE

For an intentional radiator that is designed to be connected to the public utility (AC) power line, the, the radio frequency voltage that is conducted back onto the AC power line on any frequencies within the band 150 KHz to 30 MHz shall not exceed the limits in the following table, as measured using a 50uH/50 ohms line impedance stabilization network (LISN). Compliance with the provisions of this paragraph shall be based on the measurement of the radio frequency voltage between each power line and ground at the power terminal. The lower limit applies at the boundary between the frequencies ranges.

Frequency of Emission (MHz)	Conducted Limit(dBuV)	
	Quasi-Peak	Average
0.15 – 0.5	66 to 56 *	56 to 46 *
0.5 – 5	56	46
5 – 30	60	50

* Decreases with the logarithm of the frequency.

12.2 MEASUREMENT PROCEDURE

(1) The equipment was set up as per the test configuration to simulate typical actual usage per the user's manual. When the EUT is a tabletop system, a wooden table with a height of 0.8 meters is used and is placed on the ground plane as per ANSI C63.4 (see Test Facility for the dimensions of the ground plane used). When the EUT is a floor-standing equipment, it is placed on the ground plane which has a 3-12 mm non-conductive covering to insulate the EUT from the ground plane.
(2) Support equipment, if needed, was placed as per ANSI C63.4.
(3) All I/O cables were positioned to simulate typical actual usage as per ANSI C63.4.
(4) The EUT received power through a Line Impedance Stabilization Network (LISN) which supplied power source and was grounded to the ground plane.
(5) All support equipments received AC power from a second LISN, if any.
(6) The EUT test program was started. Emissions were measured on each current carrying line of the EUT using a spectrum Analyzer / Receiver connected to the LISN powering the EUT. The LISN has two monitoring points: Line 1 (Hot Side) and Line 2 (Neutral Side). Two scans were taken: one with Line 1 connected to Analyzer / Receiver and Line 2 connected to a 50 ohm load; the second scan had Line 1 connected to a 50 ohm load and Line 2 connected to the Analyzer / Receiver.
(7) Analyzer / Receiver scanned from 150 KHz to 30MHz for emissions in each of the test modes.
During the above scans, the emissions were maximized by cable manipulation.

12.3 TEST SETUP BLOCK DIAGRAM

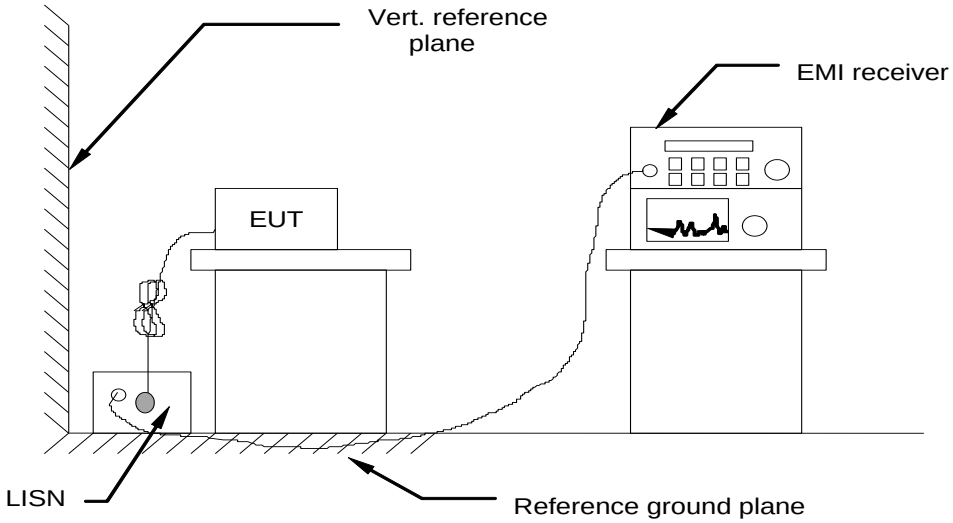

12.4 TEST EQUIPMENT USED

Conducted Emission Test Site					
Name of Equipment	**Manufacturer**	**Model**	**Serial Number**	**Cal. Date**	**Cal. Due**
TEST RECEIVER	R&S	ESCI	N/A	07/17/2013	07/16/2014
LISN	R&S	ESH3-Z5	N/A	07/17/2013	07/16/2014

12.5 TEST RESULT

LINE CONDUCTED EMISSION TEST-L

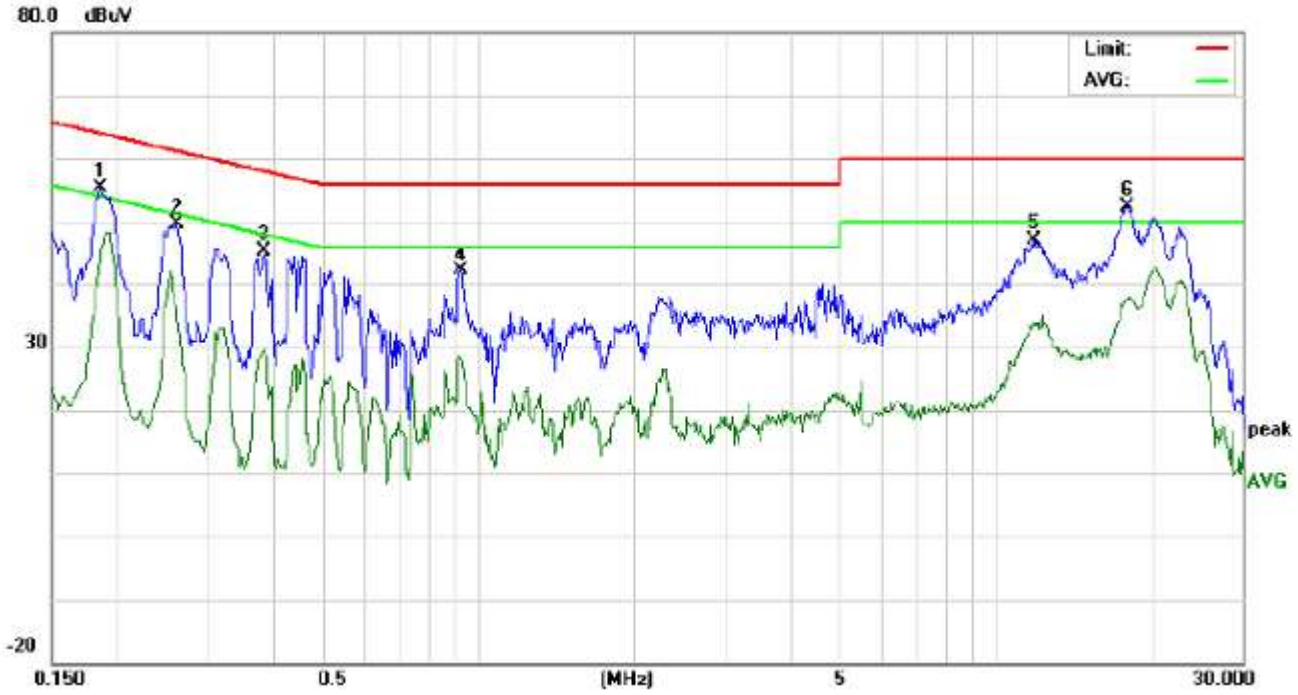

Site: Conduction
Phase: L1
Temperature: 26
Limit: FCC Class B Conduction(QP)
Power:
Humidity: 60 %
EUT: TWO WAY RADIO
M/N: NC-3330
Mode: Mode 1
Note:

No.	Freq. (MHz)	Reading_Level (dBuV)			Correct Factor	Measurement (dBuV)			Limit (dBuV)		Margin (dB)		P/F	Comment
		Peak	QP	AVG	dB	Peak	QP	AVG	QP	AVG	QP	AVG		
1	0.1860	45.17		34.76	10.20	55.37		44.96	64.21	54.21	-8.84	-9.25	P	
2	0.2602	39.31		25.78	10.27	49.58		36.05	61.42	51.42	-11.84	-15.37	P	
3	0.3860	34.96		19.20	10.32	45.28		29.52	58.15	48.15	-12.87	-18.63	P	
4	0.9260	31.76		17.70	10.40	42.16		28.10	56.00	46.00	-13.84	-17.90	P	
5	11.8299	37.00		23.60	10.13	47.13		33.73	60.00	50.00	-12.87	-16.27	P	
6	17.9979	42.33		27.42	10.12	52.45		37.54	60.00	50.00	-7.55	-12.46	P	

LINE CONDUCTED EMISSION TEST-N

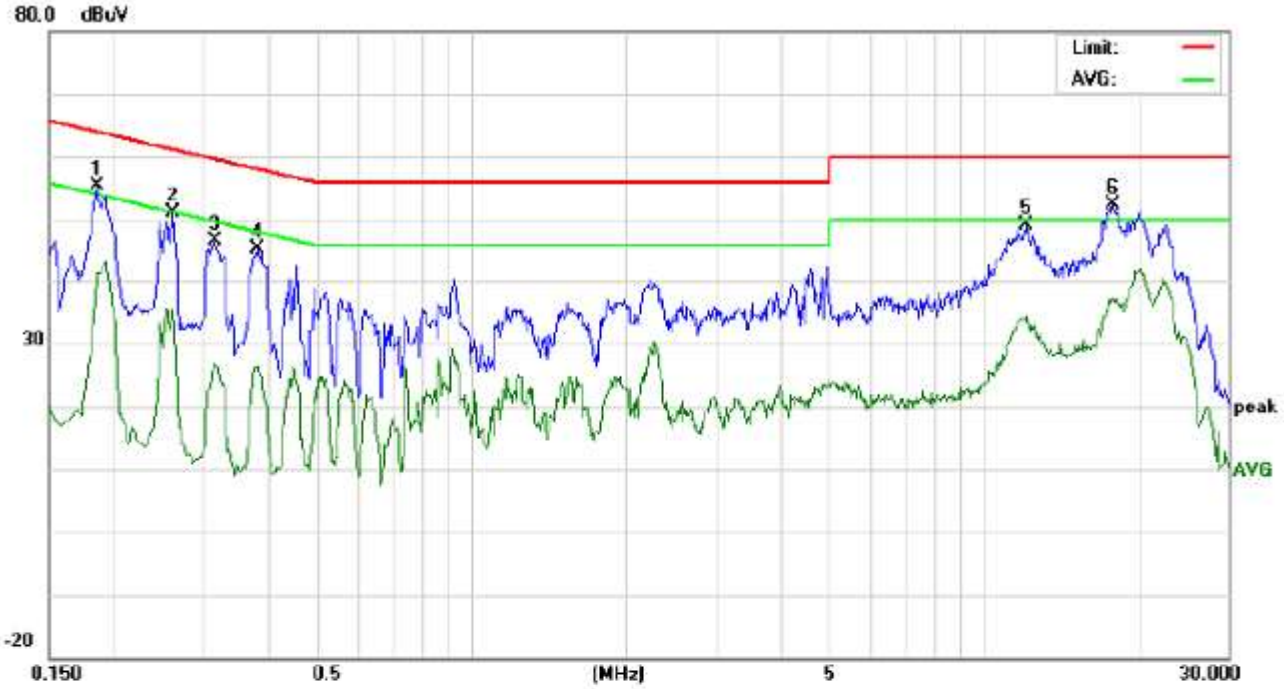

Site: Conduction
Phase: N
Temperature: 26
Limit: FCC Class B Conduction(QP)
Power:
Humidity: 60 %
EUT: TWO WAY RADIO
M/N: NC-3330
Mode: Mode 1
Note:

No.	Freq. (MHz)	Reading_Level (dBuV)			Correct Factor	Measurement (dBuV)			Limit (dBuV)		Margin (dB)		P/F	Comment
		Peak	QP	AVG	dB	Peak	QP	AVG	QP	AVG	QP	AVG		
1	0.1860	45.21		31.00	10.20	55.41		41.20	64.21	54.21	-8.80	-13.01	P	
2	0.2620	40.75		25.22	10.27	51.02		35.49	61.36	51.36	-10.34	-15.87	P	
3	0.3149	36.26		16.64	10.30	46.56		26.94	59.84	49.84	-13.28	-22.90	P	
4	0.3820	35.11		16.07	10.32	45.43		26.39	58.23	48.23	-12.80	-21.84	P	
5	12.1299	39.00		23.33	10.14	49.14		33.47	60.00	50.00	-10.86	-16.53	P	
6	17.9379	42.35		26.91	10.12	52.47		37.03	60.00	50.00	-7.53	-12.97	P	

13. AUDIO LOW PASS FILTER RESPONSE

13.1 LIMITS

2.1047(a): Voice modulated communication equipment. A curve or equivalent data showing the frequency response of the audio modulating circuit over a range of 100 to 5000 Hz shall be submitted. For equipment required to have an audio low-pass filter, a curve showing the frequency response of the filter or of all circuitry installed between the modulation limiter and the modulated stage shall be submitted.
90.242(b)(8): Recommended audio filter attenuation characteristics are given below:

Audio band	Minimum Attenuation Rel. to 1 KHz Attenuation
3 –20 KHz	60 $\log_{10}(f/3)$ dB where f is in KHz
20 – 30 KHz	50dB

13.2. METHOD OF MEASUREMENTS

The rated audio input signal was applied to the input of the audio low-pass filter (or of all modulation stages) using an audio oscillator, this input signal level and its corresponding output signal were then measured and recorded using the FFT Digital Spectrum Analyzer. Tests were repeated at different audio signal frequencies from 0 to 50 KHz.

13.3 TEST DATA

12.5 KHZ CHANNEL SPACING, F3E, FREQUENCY OF ALL MODULATION STATES

Frequency (KHz)	Audio In (dBV)	Audio out (dBV)	Attenuation (Out_In) dB	Attenuation Rel.to 3 KHz (dB)	Recommended Attenuation (dB)
0.1	-75.33	-31.45	47.6	-36.6	
0.2	-75.33	-17.63	56.6	-27.5	
0.4	-75.33	-6.47	73.2	-14.3	
0.6	-75.33	0.89	76.5	-8.2	
0.8	-75.33	4.37	79.2	-5.1	
1.0	-75.33	5.25	83.6	0.0	
1.5	-75.33	7.33	84.5	2.6	
2.0	-75.33	8.74	85.2	1.7	
2.5	-75.33	7.42	84.1	0.8	
3.0	-75.33	5.63	81.2	-1.5	0
3.5	-75.33	2.47	77.8	-5.6	-4
4.0	-75.33	-2.85	73.6	-10.1	-9
4.5	-75.33	-8.76	67.5	-16.2	-12
5.0	-75.33	-14.47	63.3	-22.7	-16
6.0	-75.33	-22.63	53.2	-31.4	-19
7.0	-75.33	-34.57	45.7	-37.3	-24
8.0	-75.33	-39.39	36.4	-47.2	-27
9.0	-75.33	-65.00	16.3	-65.4	-30
10.0	-75.33	-65.12	16.3	-65.4	-33
12.0	-75.33	-65.12	16.3	-65.4	-38
14.0	-75.33	-65.12	16.3	-65.4	-42
16.0	-75.33	-65.12	16.3	-65.4	-45
18.0	-75.33	-65.12	16.3	-65.4	-49
20.0	-75.33	-65.12	16.3	-65.4	-50
25.0	-75.33	-65.12	16.3	-65.4	-50
30.0	-75.33	-65.12	16.3	-65.4	-50
35.0	-75.33	-65.12	16.3	-65.4	-50
40.0	-75.33	-65.12	16.3	-65.4	-50
45.0	-75.33	-65.12	16.3	-65.4	-50
50.0	-75.33	-65.12	16.3	-65.4	-50

***Note**: Due to the difficulty of measuring the Frequency Response of the internal low-pass filter, the Frequency Response of All Modulation States is performed to show the roll-off at 3 KHz in comparison with the recommended audio filter attenuation.*

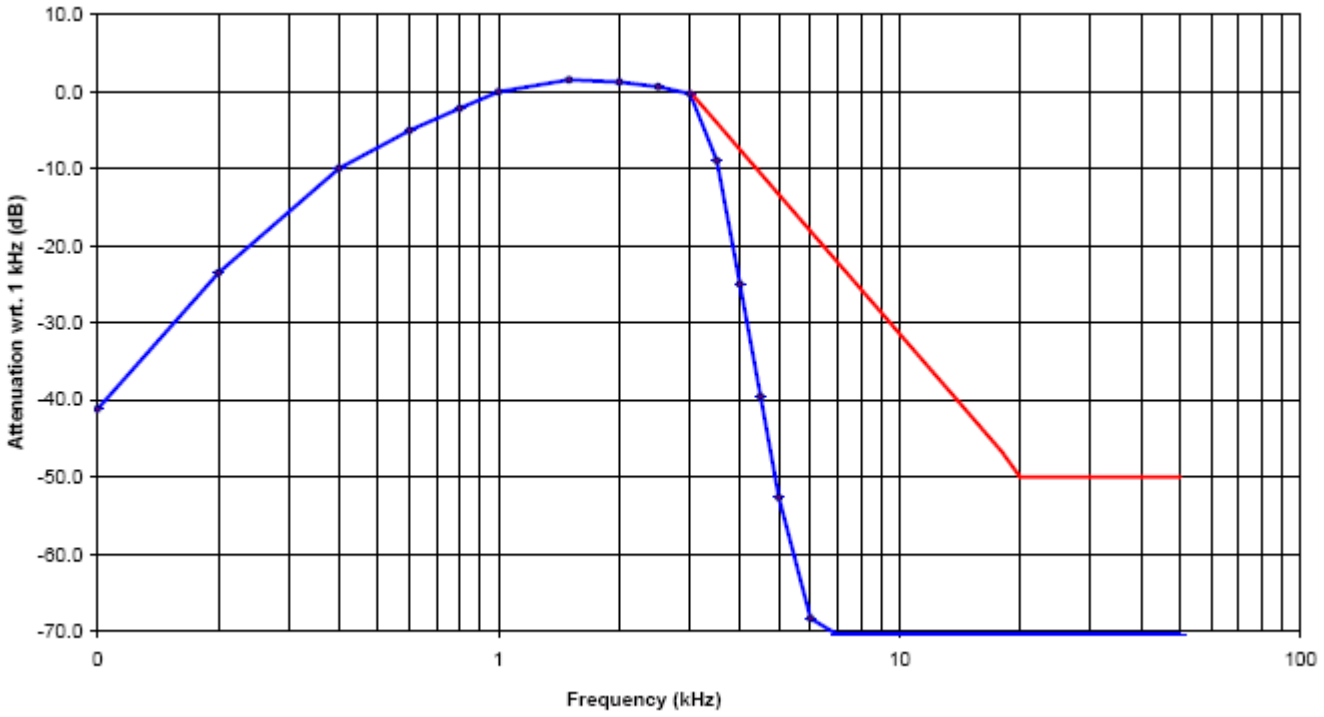
10.0
0.0
-10.0
-20.0
-30.0
-40.0
-50.0
-60.0
-70.0
Attenuation wrt. 1 kHz (dB)
0
1
10
100
Frequency (kHz)

APPENDIX I
PHOTOGRAPHS OF SETUP

RADIATED TEST SETUP

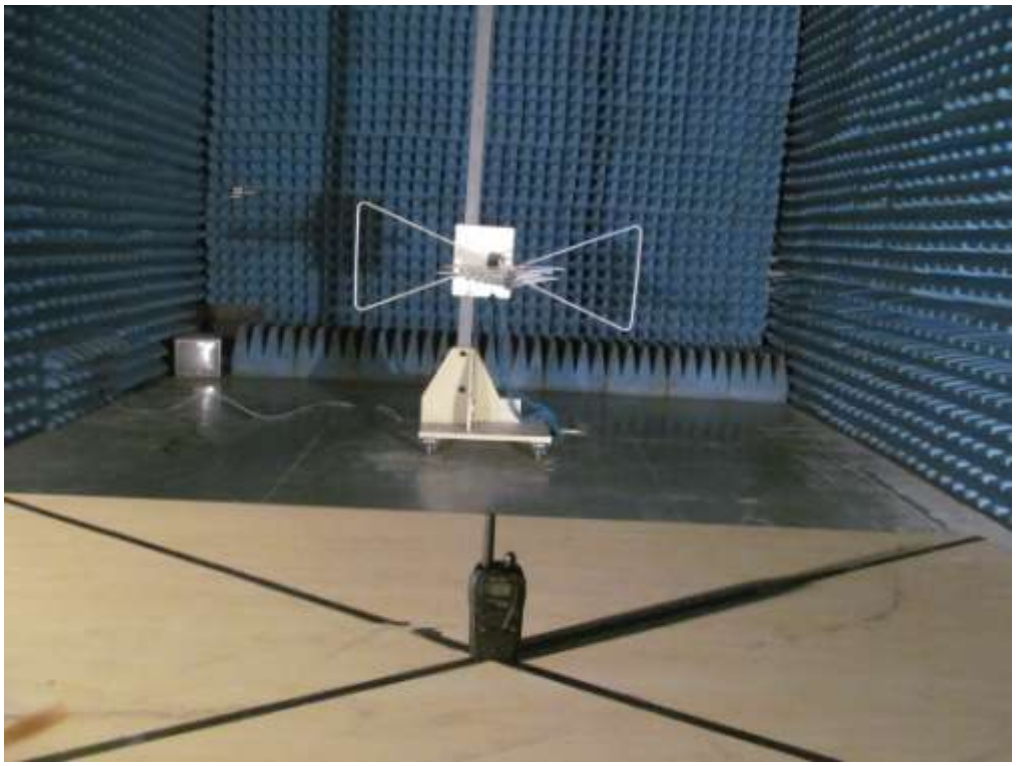

CONDUCTED EMISSION TEST SETUP

APPENDIX II
EXTERNAL VIEW OF EUT

WHOLE VIEW OF EUT

TOP VIEW OF EUT

BOTTOM VIEW OF EUT

FRONT VIEW OF EUT

BACK VIEW OF EUT

LEFT VIEW OF EUT

RIGHT VIEW OF EUT

OPEN VIEW-1 OF EUT

OPEN VIEW-2 OF EUT

INTERNAL VIEW-1 OF EUT

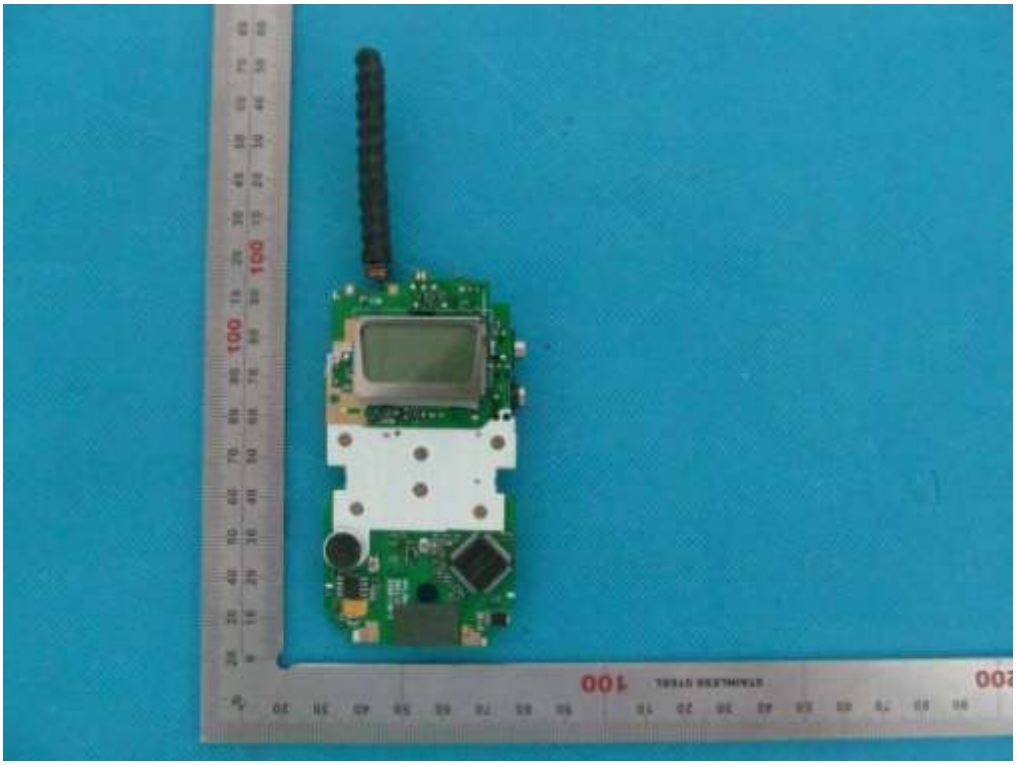

INTERNAL VIEW-2 OF EUT

INTERNAL VIEW-3 OF EUT

INTERNAL VIEW-4 OF EUT

----END OF REPORT----