1. PURPOSE

The purpose of this document is to provide specifications for the CarFi User's guide for the Stewart Autonet branded router.

2. SCOPE

This document applies to the fabrication and assembly of the Stewart CarFi User's guide.

3. RESPONSIBILITIES

It is the responsibility of contract manufacturer/packaging supplier to follow this document, or create an approved internal document.

4. DEFINITIONS

4.1. Stewart: Internal name for the second generation Autonet router.

5. APPLICABLE DOCUMENTS

All data is included in this file.

6. DIMENSIONS

OD height: 5 inches

OD Width: 5 inches

7. MATERIALS/PROCESS

Cover: Base material: 100 lb Hammermill Gloss Cover
Color: Black
Pages included: Front/blank page, Back/inside of page

Inside content: 28lb Hammermill Text
Color: Black
Pages included: 1 thru page 40 (not numbered pages but actual pages)

Fabrication: Book style, folded and stapled-2 places

Note, first 2 pages of this document are not printed in guide-reference only on fabrication

8. TESTING

TBD

9. REVISION SYNOPSIS

Name	Description	Revision	Date
dbl	Initial release	01	May 21, 2009
dbl	Updated content, format, etc.	02	April 22, 2010
dbl	Updated content, format, etc.	03	December 16, 2010
dbl	Updated page 1 and 44	04	January 12, 2011

10. Approvals

Approval Name	Date	Title

CarFi Users Guide

Autonet mobile

Introducing the Autonet Mobile CarFi Hotspot

Thank you for purchasing Autonet Mobile's CarFi hotspot, designed specifically for the stringent demands of mobile vehicles.

The advantages of Autonet Mobile are reliable seamless internet connections wherever you are and whenever you need them most, in your car. Whether it's the patent-pending TRU Technology keeping your connections from losing signals between cell towers, tunnels, or areas of poor reception, or the dedicated and diligent customer service providing support for your network, devices or billing in our centralized local call center, Autonet Mobile is dedicated in providing you world class and unparalleled service and products.

Autonet Mobile CarFi:

"It's the Internet on Wheels"

Table of contents

CarFi Overview	1
Quickstart guide	5
Configuring the CarFi	6
Configuring Wireless Settings	7
Configuring Security Settings	10
Disabling Login Screen	11
Changing the password	11
Checking Connection status	12
Troubleshooting guide	13
Service Information	15
Technical Specifications	16
Installation Instructions	18
Care and Maintenance	21
Regulatory Information	22
Safety Information	23
Accepted Use Policy	28
Autonet Software License	32
Limited Warranty	35
Legal Disclosure	37

The Autonet Mobile CarFi Hotspot Overview

Package Contents:

- CarFi Unit and docking station
- User's guide included in the package
- Installation kit or installation cable
- Activation guide

Snapshot of features

- Reliable TRU technology yielding maximum connection uptime
- Maximum reliability, featuring ruggedized device designed specifically for automotive applications
- Docking station for vehicle-vehicle mobility (must purchase additional dock for this application)
- I/O's: 2 x USB ports, Ethernet port
- Memory-1G internal, CF slot for additional memory
- FCC compliant & OEM Automotive approved
- Remote administration monitoring, configuring and firmware updates
- Compatible with all major OS: Windows, OSX, Linux, Solaris
- Device compatibility: works with any WiFi device such as desktops, laptops, handsets, servers, POS systems, ATM machines, remote security, sensing/metering devices

About your CarFi

1. External cellular antenna-TNC
2. Complete unit with dock
3. Blue indicator LED
4. Pushbutton for undocking CarFi
5. Power cable/harness

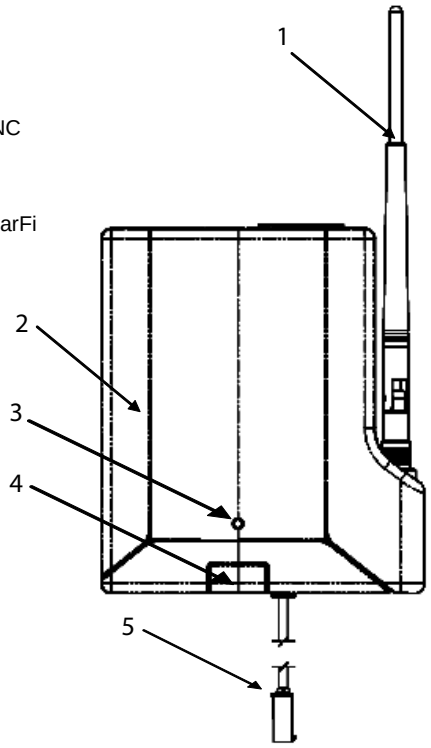

About your CarFi continued

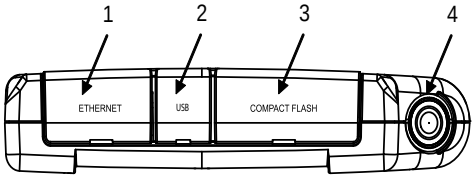

1. Ethernet port
2. (2) USB ports
3. Compact Flash slot
4. TNC antenna connector
5. Dock mounting holes (4)
6. Pushbutton for undocking CarFi

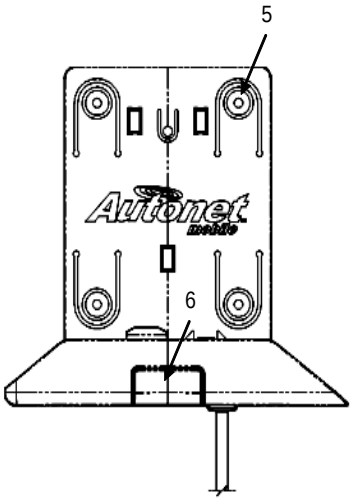

For technical support please call Autonet Mobile customer service center: 1-800-977-2107

Autonet Mobile assumes no responsibility for the configurations, security, or data files on your wireless device resulting from connection to Autonet Mobile's network. Anti-virus, privacy and security protection is the responsibility of the user.

Do not operate CarFi while driving or perform any function that takes your attention away from safely operating your vehicle. Any function that requires prolonged attention should be performed after coming to a complete stop. Always stop the vehicle in a safe location before performing these functions. Failure to do so may result in an accident.

If CarFi is found, please call: 1-800-977-2107. The CarFi is automatically disabled if reported lost or stolen.

Quickstart Guide

Step 1

Turn your car to the Acc position to power up Autonet Mobile's CarFi.

Step 2

Open your wireless network list and connect to "autonet-XXXX". (The last 4 digits will be the same as your last 4 digits of CarFi serial number).

Step 3

Open your web browser.

Click on the login button.

Step 4

Happy Surfing!

(Please note: You must complete an Autonet service agreement in order to activate CarFi. The Autonet service agreement can be found at: https://www.autonetmobile.com/signup

Configuring CarFi

It is highly recommended to enable "encryption type/key security" and change the default password for CarFi

Configuring CarFi's settings

Step 1

Locate CarFi's ten digit serial number located on the back side of CarFi, or in front of the User's guide included in the package. (If you have trouble locating the serial number of the CarFi, please call our customer support line at 1-800-977-2107 for assistance)

Step 2:

Open a web browser and go to: http://www.autonetrouter.com/admin

Login with username "autonet" and use CarFi's serial number as the password (e.g. 0024C76258). Click on the login button. *Please note that all Alpha characters must be capitalized.*

Configuring Wireless Settings

Click on “Wireless Settings”

The wireless settings default page will look similar to the right

Setting ESSID

The ESSID is the identifying name of a wireless network - strictly it is the identifying name of a wireless access point. It allows one wireless network to be clearly distinguishable from another. The default ESSID is autonet-xxxx, where xxxx is the last 4 digits of CarFi’s serial number. Although this can be modified, it is recommended that you keep this ESSID as the default to distinguish CarFi from other hotspots in the same vicinity. Please note that if you change this name, you may need to reset your networks list/connection on your web accessible device.

Configuring Wireless Settings (continued)

Setting the Encryption type/key

By default the encryption type and key are not set at the factory. To set the current encryption type (WEP, WPA, WPA2), use the pull down menu to select the encryption type, then enter the encryption key value.

Min/Max digits for each encryption type are the following:

WEP-Wired Equivalent Privacy. An IEEE standard security protocol for 802.11 networks. This protocol has been superseded by WPA and WPA2. A 10 Hex digit string (i.e. 0123456789) or a 5 character ASCII string (i.e. s: smile)
Security Strength:Good

WPA-WiFi Protected Access. A WiFi Alliance security protocol for 802.11 networks
A 8-63 ASCII character string length (the longer the character string, the stronger the encryption)
Security Strength: Better

WPA2-WiFi Protected Access. A WiFi Alliance security protocol for 802.11 networks. A 8-63 ASCII character string (the longer the character string, the stronger the encryption)
Security Strength: Best

Autonet Mobile recommends WPA2

Radio Mode

This feature allows you to select whether the radio is in 802.11b, 802.11g or 802.11a mode. The default setting is (g), which is backward compatible with (b) but not (a). If your system only supports (a), you will need to set CarFi'sRadio mode to (a) to operate properly.
This action requires a re-boot of the CarFi if changed.

Configuring Wireless Settings (continued)

Channel

Direct communication between an 802.11 Radio card and an access point occurs over a common channel frequency. The FCC allows channels 1 through 11 within the U.S. An important concept to note regarding channel assignments is that the channel actually represents the center frequency that the transceiver within the radio and access point uses (e.g., 2.412 GHz for channel 1 and 2.417 GHz for channel 2). There is only 5 MHz separation between the center frequencies, and an 802.11b signal occupies approximately 30 MHz of the frequency spectrum. The signal falls within about 15 MHz of each side of the center frequency. As a result, an 802.11b signal overlaps with several adjacent channel frequencies. This leaves you with only three channels (channels 1, 6, and 11 for the U.S.) That you can use without causing interference between access points.

TxPower

This allows you to set the transmit power of the radio. Setting a lower value limits the range of the radio and reduces interference with other access points. (default: 19 recommended)

Bit rate

This allows you to set the bit rate in Mbs. The bit rate is the speed at which bits are transmitted over the medium. The user speed of the link is lower due to medium sharing and various overhead. Select a value to lock the card to a particular bit rate. If you specify auto, the driver will use all bit rates to find an optimum rate. (default: auto recommended)

RTS threshold

RTS/CTS adds a handshake before each packet transmission to make sure that the channel is clear. This adds overhead, but Increases performance in case of hidden nodes or a large number of active nodes. This parameter sets the size of the smallest packet for which the node sends rts; a value equal to the maximum packet size disables the mechanism. You may also set this parameter to off. (default: off recommended)

Configuring Wireless Settings (continued)

Fragmentation threshold

Fragmentation allows the splitting of an IP packet in a burst of smaller fragments transmitted on the medium. In most cases this adds overhead, but in a very noisy environment this reduces the error penalty and allows packets to get through interference bursts. This parameter sets the maximum fragment size. You may also set this to off to disable the mechanism. (default: off recommended)

Configuring Wireless Security Settings

Click on “Wireless Security”

The Wireless Security Settings allow you to control which wireless-equipped devices may communicate with the router, depending on their MAC addresses. By default these MAC filters are disabled. If you turn MAC filters on, you should be sure and include the MAC address of the device that you are using to communicate with. Otherwise, the device that you’re using will lose its connection to CarFi’s Hotspot. To enable MAC filters, change the MAC filters option to “on” and then check the “Allowed” box next to the MAC addresses that you wish to allow to join the network. If you would like to connect devices that are not currently attached to CarFi’s Hotspot, you may add them in the text field. You can add multiple devices by separating them with a space. Select “commit changes” when finished.(Default setting: MAC filters off)

Disabling the Login Screen

Click on “login control”

Normally a device that connects to the Autonet Mobile network must first click through the login screen that comes up on your web browser. However, there are some devices that do not have a web browser (cameras, music players, etc.), so we’ve created a method for disabling the login page for those devices.

To bypass the login screen for a device, check the box under “no login required” next to the MAC address of that device.

If you would like to add devices that are not currently attached to CarFi’s Hotspot, then you may add them in the text field. You can add multiple devices by separating them with a space. Select “Commit Changes” when you are finished.

Changing the Password

Click on “Password”

Changing the Password (continued)

Click on the user name “autonet”
Enter a new password and
click on “Save Changes”

If you forget your password, please contact the Autonet Mobile Customer Service Center to have it reset.

Checking the connection status of the CarFi

Go to the website http://www.autonetrouter.com to see the current connection status of CarFi.

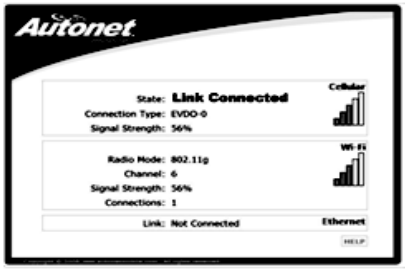

Troubleshooting Guide

For a more complete listing of errors/information please visit our website or call our customer support center: 1-800-977-2107 (http://www.autonetmobile.com/)

Problem/Error	Solution
CarFi has no power (The LED indicator is not visible) **Please note at CarFi startup the LED will be off for approximately 15 seconds in its sequencing mode (see LED sequencing pg. 16)**	• Check to ensure the main enclosure is firmly attached to the bottom docking station. • Check to make sure the power installation cable is properly installed, and you have a regulated 12V DC supply with a min. 1.8A. • Check the inline fuse. If “open” or damage, please call our customer support center to order a replacement. • Reboot CarFi by turning your car ignition off and on again (while parked in a safe location).
Connectivity issues-limited, low signal or no signal **(If the Blue LED continues it’s fast blinking sequence and will not go to a solid state, you are likely in an area with no coverage. Please call our customer support center to review your coverage area.)**	• Disconnect from the “Autonet” wireless network and reconnect. • Ensure the cell antenna on CarFi is secured properly. • Position CarFi in a different location in your vehicle. • Reboot CarFi by turning your car ignition off and on again (while parked in a safe location).

Troubleshooting Guide (cont.)

Problem/Error	Solution
Wireless configuration issues (Autonet-XXXX does not appear in your wireless networks window)	• Disable and then re-enable your wireless interface. • Refresh your available wireless networks window. • Disconnect CarFi from your wireless network and reconnect. • Consult the configuration instructions provided by your Wi-Fi device manufacturer. If Autonet-XXXX still does not appear in this list, call our customer support center for further troubleshooting.
Forgotten password	Please call are customer support center to reset password

If you have any questions or problems, please call the Autonet Mobile Customer support center phone line: 1-800-977-2107

Service Information

Turn off your vehicle ignition; disconnect CarFi or any other Autonet Mobile accessories and, if necessary, refer the issue to qualified service personnel or call Autonet Customer Service Center if:

- The main unit, docking station, power cable/connection or connector to your CarFi is damaged.
- Liquid has spilled or objects have fallen into your CarFi or Autonet Mobile accessories.
- Your CarFi or other Autonet Mobile accessories become excessively hot to the touch.
- Your CarFi or other Autonet Mobile accessories have been exposed to rain or water.
- Your CarFi or other Autonet Mobile accessories have been dropped or damaged in any way.
- Your CarFi or other Autonet Mobile accessories do not appear to operate normally in accordance with the instructions contained in any guide provided by Autonet Mobile Inc.
- Your CarFi or other Autonet Mobile accessories exhibit a distinct change in performance.

All servicing of CarFi or other Autonet accessories should be performed by qualified personnel. Do not attempt to disassemble, modify, or repair Autonet's CarFi or any other Autonet accessories yourself.

If you have any questions or problems, please call the Autonet Mobile Customer support center phone line: 1-800-977-2107

Technical Specifications of Autonet's CarFi

Led status overview-General usage

Status LED (Blue)	Indicates
LED not lit	CarFi is not connected to power, or has been recently turned on (Please note: Blue LED does turn off for approximately 15 seconds at startup)
LED slow blink	CarFi is in sleep mode (if there are no Wi-Fi users connected to it, the unit will go into sleep mode and automatically reconnect once a device is attached)
LED fast blink	CarFi is acquiring the cellular network (after waking up from sleep mode)
LED solid	CarFi is connected

Led status overview-initialization sequence (at power on)

Status LED (Blue)	Indicates
LED not lit (20-30 seconds)	CarFi has been powered on
LED in medium blink mode (20-30 seconds)	CarFi is in initialization mode
LED fast blink (20-30 seconds)	CarFi is acquiring the cellular network
LED solid	CarFi is connected to the cellular network

CDMA/EVDO Specifications

CDMA/EVDO specification	CDMA Rev. A, Rev 0, 1XRTT
Band Designation	800/1900 Mhz
Transmit Band	824.7 – 848.31MHz/ 1851.25 – 1908.75MHz
Receive Band	869.7 – 893.31MHz/ 1931.25 – 1988.75MHz

Technical specifications (continued)

LAN (Local Area Network)/Connector Specifications

802.11 a/b/g	NAT	DHCP server
(2) USB connectors	Ethernet	Compact Flash
Power Connector	External TNC (WAN antenna)	

WAN (Wide Area Network) Specifications

TRU Technology Link Management for fast and easy connect
TRU Technology Link Management for maintaining WAN connections without impacting LAN sessions (patent pending)
TRU Technology Network Management for link monitoring
Auto failover between broadband and backup coverage networks

Environmental Specifications

Operating temperature	-20°C to 70 °C
Storage temperature	-20°C to 85 °C

Mechanical Specifications

Dimensions (W x D x H)	165mm x 35mm x 184mm
Weight	29 oz

Memory specifications

Memory-1G internal

Installation Instructions

Safety Precautions

The Autonet Mobile installation instructions must be followed to minimize potential interference with other electronics on the vehicle.

WARNING: To prevent injury or fire, take the following precautions:

- When extending the ignition, battery or ground wires, make sure to use automotive grade/UL approved wires with a min. 18 AWG.
- To prevent a short circuit, never insert or leave any metallic objects (such as coins or metal tools) inside or around the unit.
- If the unit starts to emit smoke or strange smells, disconnect immediately and consult the Autonet Mobile Customer Service Center.
- Do not touch CarFi during use because the surface of the unit may become hot and may cause burns if touched.

CAUTION: To prevent damage to CarFi and its wiring, take the following precautions:

- Do not remove or disassemble the plastic enclosure of CarFi. Removing or disassembling the unit will void the warranty.
- Do not install CarFi in a spot exposed to direct sunlight, excessive heat, humidity, water/dust intrusion.
- To prevent a short circuit when replacing a fuse, first turn off the ignition and disconnect the wiring harness. When replacing a fuse, only use an Autonet approved fuse. Any fuse more than the approved rating may cause damage to the CarFi.
- Make sure the car ignition is turned off before attempting to install the CarFi unit and its power cable/connections.
- Be sure CarFi is connected to a 12V DC power source with a negative ground connection, with a minimum of 1.8A.
- Connect CarFi's ground wire to an appropriate car chassis ground point that has a direct connection to the car batteries negative terminal.

Installation Instructions (continued)

- Connect the 12V positive power wire for CarFi, directly from the ignition power source. Installing the wiring in the inline harness may cause blown fuses, etc. Installing it directly to the car battery can deplete the battery and possibly cause a "dead" battery scenario.
- When installing the wiring, do not run along any sharp chassis edges or through any exposed sharp chassis openings. Use insulation grommets or other appropriate insulation materials.

Mounting Locations-Do's and Don'ts

CarFi is typically mounted in the following locations:

- On the inside rear side panel in an SUV or Van.
- Under the rear deck lid in a sedan.
- In the trunk of the vehicle.
- In a location that gives the antennas the fewest obstructions to the outside of the vehicle.

CarFi should not be mounted in the following locations:

- In a location that interferes with driving.
- In a location that may have water intrusion.
- In a location that has extreme dust intrusion
- In a location that is extremely hot or has hot air flowing on the unit.
- In a location that gets direct sunlight.
- In a location within 20 cm of any passenger.
- In a location under or surrounded by carpet.
- In a location that does not allow heat to easily dissipate (glove box, etc.).
- In a location near the dashboard, rear tray or air bag safety parts.

Installation Instructions (continued)

Fastening CarFi to the Vehicle

- Use the appropriate fasteners to attach the docking unit to the vehicle. Do not over tighten the screws or fasteners.
- When making a hole or openings in a side panel, under a seat, in the trunk, in the rear deck or somewhere else in the vehicle, check that there is nothing hazardous on the opposite side such as a gas tank, brake line, battery or wiring harness.
- Ensure that the unit is securely fastened and that it cannot be dislodged after installation.

Electrical wiring

- Remove the ignition key and disconnect the negative terminal of the battery when installing CarFi.
- The electrical wiring must be routed to the power source in a manner that prevents the wire from being damaged or nicked in any way. It should also be ensured that the wire is not exposed in a manner that may allow it to become snagged or entangled in any way. When extending the ignition, battery, or ground wires, make sure to use automotive grade/UL approved wires with a minimum 18 AWG.
- Connect the power wire (Red wire) to a circuit that only provides power when the ignition is turned on. Be sure to install the 2A protective fuse/fuse holder in line with the power wire.
- Connect the Ground wire (Black wire) to an appropriate car chassis ground point that has a direct connection to the car batteries negative terminal.
- After powering up CarFi, the blue indicator LED will begin to blink after about 15 seconds
- After installing the unit and wiring, check to make sure that electrical equipment such as the brake lamps, turn signal lamps and windshield wipers operate normally.

Mounting and wiring this product requires the appropriate skill and experience. For safety's sake, leave the mounting and wiring work to professionals.

Care and maintenance of CarFi

Although designed specifically for the stringent environment of an Automobile, CarFi must be handled similar to any typical electronic device. Follow these guidelines in using and maintaining your device:

- If CarFi becomes excessively dirty, turn off the ignition power, remove CarFi unit from the docking station and wipe the enclosure with a dry silicone cloth or soft cloth.
- Do not spray the enclosure with any household cleaners or liquids of any kind.
- Do not wipe CarFi with a hard cloth or a cloth dampened by volatile solvents such as paint thinners or alcohol.
- To prevent the battery from draining please refrain from leaving the key in the ACC on position for any extended amount of time.

Regulatory Information (To maintain compliance with FCC exposure guidelines, use only accessories supplied or approved by Autonet Mobile Inc.)

Exposure to Radio Frequency Signals

Autonet Mobile is a low power radio transmitter and receiver. When it is turned on, it sends out and receives RF signals. Autonet Mobile complies with FCC guidelines respecting safe levels of RF exposure for handled wireless devices, which in turn are consistent with the following safety standards previously set by certain standards bodies:
ANSI/IEEE C95.1-1999, IEEE Standard for Safety Levels with Respect to Human Exposure to Radio Frequency Electromagnetic Fields, 3 kHz to 300 GHz -- National Counsel on Radiation Protection and Measurements (NCRP) Report 86, - 1986, Biological Effects and Exposure criterion for Radio Frequency Electromagnetic Fields -- International Commission on Non-Ionising Radiation Protection (ICNIRP) 1988, Guidelines for limiting exposure to time-varying electric, magnetic, and electromagnetic fields (up to 300 GHz)

FCC Compliance Statement

This equipment has been tested and found to comply with the limits for a Class A digital device, pursuant to part 15 of the FCC Rules. These limits are designed to provide reasonable protection against harmful interference when the equipment is operated in a commercial environment. This equipment generates, uses, and can radiate radio frequency energy and, if not installed and used in accordance with the instruction manual, may cause harmful interference to radio communications. Operation of this equipment in a residential area is likely to cause harmful interference in which case the user will be required to correct the interference at his own expense. This equipment complies with the FCC RF radiation exposure limits set forth for an uncontrolled environment. This equipment should be installed and operated with a minimum distance of 20 centimeters between the radiator and your body.

Specific Absorption Rate Data

Autonet Mobile meets U.S. government requirements for exposure to radio waves. Autonet Mobile is a radio transmitter and receiver. It is designed and manufactured not to exceed the emission limits for exposure to RF energy set by the FCC. These limits are part of comprehensive guidelines and establish permitted levels of exposure to RF energy for the general population. These guidelines are based on standards that were developed by independent scientific organizations through periodic and thorough evaluation of scientific studies. The standards include a substantial safety margin designed to assure the safety of all persons, regardless of age and health. Any changes or modifications not expressly approved by the party responsible for compliance could void the user's authority to operate the equipment. The FCC requires that you be notified that any changes or modifications made to this device that are not expressly approved by Autonet Mobile may void your authority to operate the equipment.

Important Safety Information

Please read this Safety Policy concerning the usage of CarFi suitable for use in motorized vehicles (“Autonet Mobile”) before operating CarFi. Retain this Safety Policy for your future reference.

Accessories

Use only accessories manufactured or approved by Autonet Mobile, Inc. with CarFi. The use of any accessories not manufactured or approved by Autonet Mobile, Inc. for use with CarFi may be dangerous and may void the warranty.

Driving

Do not use CarFi when driving a motor vehicle because driving safely is your first responsibility and requires your full attention. If you find it necessary to use CarFi while driving a motor vehicle, please pull off the road and park in a safe place before using.

For vehicles equipped with air bags

An air bag inflates with great force. Do not place objects, including CarFi, in the area adjacent to any air bag or in any air bag deployment area. If CarFi is improperly installed and an air bag inflates, serious injury could result.

Electronic Devices

Most modern electronic equipment is shielded from radio frequency (RF) signals. However, certain electronic equipment may not be shielded against the RF signals from CarFi. It is your responsibility to determine any effects that your use of CarFi may have on other electronic equipment. In particular, consult the manufacturer of any motor vehicle in which you intend to use CarFi to determine if the electronic equipment in that vehicle is adequately shielded from the RF energy emitted by your CarFi. You should also consult the manufacturer of any electronic equipment that you have added to that vehicle to ensure that it is adequately shielded from the RF energy emitted by CarFi. You are responsible for any affects that your use of CarFi may have on the electronic equipment in any vehicle in which it is operated.

Important Safety Information (continued)

Pacemakers

If you have a pacemaker, you should consult a physician or the manufacturer of your pacemaker if you have questions regarding the effect of RF signals on your pacemaker. If you have a pacemaker, ensure that you are using CarFi in accordance with the safety requirements for that particular pacemaker, which may include the following:

- Always keep CarFi more than 20 cm (7 Inches) from the pacemaker when CarFi is turned on.
- If you have any reason to believe that CarFi is interfering with the proper functioning of your pacemaker, turn CarFi off immediately.

Hearing Aids

Some digital wireless devices may interfere with the normal operations of some hearing aids. In case of such interference, consult your service provider or contact the manufacturer of your hearing aid to determine alternatives.

Other Medical Devices

If you use any other personal medical devices, consult the manufacturer of that device to determine if it is adequately shielded from external RF energy. Your physician may be able to assist you in obtaining this information.

Medical Facilities

Turn CarFi off in hospitals and other health care facilities when any regulations posted in these facilities tell you to do so. Hospitals and other health care facilities may be using equipment that could be sensitive to external RF energy.

Posted Facilities

Turn CarFi off in any facility where posted notices so require.

Important Safety Information (continued)

Blasting Areas

To avoid interfering with any blasting operations, turn CarFi off when in any “blasting area” or in any area posted: “turn off two-way radio.” Obey all signs and instructions.

Potentially Explosive Atmospheres

Turn CarFi off when in any area with a potentially explosive atmosphere and obey all signs and instructions. Sparks in such areas could cause an explosion or fire and result in bodily injury or death.

Areas with a potentially explosive atmosphere are often, but not always, clearly marked. They Include fueling areas, like a gasoline/petrol station, fuel or chemical transfer or storage facilities; vehicles using liquefied petroleum gas (such as propane and butane); areas where the air contains chemicals or particles, such as grain, dust, or metal powders; and any other area where you would normally be advised to turn off your vehicle engine.

Power Cable/Connections

To prevent damage to yourself or CarFi, take the following precautions:

- To prevent a short circuit when replacing a fuse, first turn off the ignition and disconnect the wiring harness. When replacing a fuse, only use an Autonet approved fuse. Any fuse less than the approved rating may cause damage to CarFi.
- Unplug the power cable/connections during any lightning storms to avoid electrical shock or fire.
- Make sure the car ignition is turned off before attempting to remove or modify any power cable/connections.
- Keep the minimum required amount of space between the power cable/connections and any heat sources.
- Do not allow the power cable/connections to be walked on, pinched, twisted or pulled which could cause damage.
- Do not use CarFi if any power cable/connections are damaged which could cause fire or electrical shock.

Important Safety Information (continued)

Foreign Objects and Liquids

- Never push objects of any kind into CarFi or any Autonet accessories because such insertion may cause components to short out and result in a fire or electrical shock.
- Do not use CarFi or any other Autonet accessories near or in water, or if wet. Never spill liquid of any kind on CarFi or any Autonet accessories.

Stability

Do not place CarFi or any Autonet accessories on any unstable surfaces. They may fall or shift while the vehicle is moving, thereby potentially causing serious injury to a person or animal, and/or serious damage to CarFi or any Autonet accessories.

Magnetic Items

Do not place items with magnetic components, like credit cards, phone cards, bank books, or subway tickets, near your CarFi.

Extreme Temperatures

Never expose your CarFi unit to excessively hot or cold temperatures because CarFi may malfunction or be damaged. CarFi and any Autonet accessories should be located away from any heat sources.

Storage

Store your CarFi unit in a clean, dust-free environment when not in use as well as out of reach of small children and animals.

Important Safety Information (continued)

Adjustments to CarFi

Adjust only those controls for CarFi that are discussed in the instructions contained in any guide provided by Autonet Mobile, Inc. An improper adjustment of other controls for CarFi may result in damages and may require extensive work by a qualified technician to restore CarFi or any Autonet accessory, as the case may be.

Misuse

Do not drop, strike, or severely shake CarFi. Such actions may damage its internal circuit boards or other components/cables.

Antenna Usage

Only use the supplied integral antenna with CarFi or approved Autonet external antenna accessories. Unauthorized antenna modifications, or attachments could damage CarFi and may violate U.S. Federal communications commission (FCC) regulations. No one should hold the antenna or let it come into contact with his or her body when CarFi is in use. Do not use CarFi if the antenna is damaged. If a damaged antenna touches the skin, it may cause a slight burn.

Local Laws

Drivers and their passengers are responsible for determining and complying with any local laws affecting the use of CarFi. Accordingly, you should familiarize yourself with any applicable laws in jurisdictions where you use CarFi. Always obey those laws.

Acceptable Use Policy

1. Introduction

Autonet Mobile, Inc's Acceptable Use Policy ("AUP") is intended to help enhance the use of the internet by preventing unacceptable use. All users of Autonet Mobile, Inc's internet services (the "services") those who access some of our services but do not have accounts ("visitors"), as well as those who pay a monthly service fee to subscribe to the services ("members") must comply with this AUP. We support the free flow of information and ideas over the internet and do not actively monitor use of the services under normal circumstances. Similarly, we do not exercise editorial control over the content of any web site, electronic mail transmission, newsgroup, or other material created or accessible over or through the services, except for certain proprietary websites. However, in accordance with our internet Service Agreement, we may remove any materials that, in our sole discretion, may be illegal, may subject us to liability, or which may violate this AUP. Autonet Mobile, Inc may cooperate with legal authorities and/or third parties in the investigation of any suspected or alleged crime or civil wrong. Your violation of this AUP may result in the suspension or termination of either your access to the services and/or your Autonet Mobile, Inc account or other actions as detailed in section 3. This AUP should be read in conjunction with our internet Service Agreement and other policies.

2. Violations of Autonet Mobile's Acceptable Use Policy

A. Illegal use. Using the services to transmit any material (by e-mail, uploading, posting, or otherwise) that, intentionally or unintentionally, violates any applicable local, state, national or international law, or any rules or regulations promulgated there under.

B. Harm to minors. Using the services to harm, or attempt to harm, minors in any way.

C. Threats. Using the services to transmit any material (by e-mail, uploading, posting, or otherwise) that threatens or encourages bodily harm or destruction of property.

D. Harassment. Using the services to transmit any material (by e-mail, uploading, posting, or otherwise) that harasses another.

E. Fraudulent activity. Using the services to make fraudulent offers to sell or buy products, items, or services or to advance any type of financial scam such as "pyramid schemes," "ponzi schemes," and "chain letters."

Acceptable Use Policy (continued)

F. Forgery or impersonation. Adding, removing, or modifying identifying network header information in an effort to deceive or mislead is prohibited. Attempting to impersonate any person by using forged headers or other identifying information is prohibited. The use of anonymous remailers or nicknames does not constitute impersonation. Using deliberately misleading headers ("munging" headers) in news postings in order to avoid spam e-mail address collectors is allowed.

G. Unsolicited commercial e-mail/unsolicited bulk e-mail. Using the services to transmit any unsolicited commercial e-mail or unsolicited bulk e-mail. Activities that have the effect of facilitating unsolicited commercial e-mail or unsolicited bulk e-mail whether or not that email is commercial in nature are prohibited.

H. Unauthorized access. Using the services to access, or to attempt to access, the accounts of others, or to penetrate, or attempt to penetrate, security measures of Autonet Mobile, Inc's or another entity's computer software or hardware, electronic communications system, or telecommunications system, whether or not the intrusion results in the corruption or loss of data.

I. Copyright or trademark infringement. Using the services to transmit any material (by e-mail, uploading, posting, or otherwise) that Infringes any copyright, trademark, patent, trade secret, or other proprietary rights of any third party, Including, but not limited to, the unauthorized copying of copyrighted material, the digitization and distribution of photographs from magazines, books, or other copyrighted sources, and the unauthorized transmittal of copyrighted software. Autonet Mobile, Inc. is registered under the digital millennium copyright act of 1998.

J. Collection of personal data. Using the services to collect, or attempt to collect, personal information about third parties without their knowledge or consent.

K. Reselling the services. Reselling the services without Autonet Mobile's authorization.

Acceptable Use Policy (continued)

L. Network disruptions and unfriendly activity. Using the services for any activity which adversely affects the ability of other people or systems to use Autonet Mobile, Inc services or the internet. This Includes “denial of service” (dos) attacks against another network host or individual user. Interference with or disruption of other network users, network services or network equipment is prohibited.It is the user’s responsibility to ensure that their network is configured in a secure manner. A user may not, through action or inaction, allow others to use their network for illegal or inappropriate actions. A user may not permit their network, through action or inaction, to be configured in such a way that gives a third party the capability to use their network in an illegal or inappropriate manner.

M. News. Autonet Mobile users should use their best judgment when posting to any newsgroup. Many groups have charters, published guidelines, FAQ’s, or “community standards” describing what is and is not considered appropriate. Usenet can be a valuable resource if used properly. The continued posting of off-topic articles is prohibited. Commercial advertisements are off- topic in most newsgroups, especially regional groups not specifically named for such. The presence of such articles in a group is not indicative of the group’s “intended” use. Please familiarize yourself with basic Usenet netiquette before posting to a newsgroup. Autonet Mobile considers “multiposting” to 10 or more groups within a two week sliding window to be excessive. Autonet Mobile servers currently limit the number of allowable “cross-posts” to 9. Autonet Mobile users may not cancel messages other than their own messages. A user may cancel posts forged in that user’s name. We may cancel any postings which violate this AUP.

N. Long connections and multiple logins. Using a personal account for high volume or commercial use is prohibited. The services are intended for periodic, active use of e-mail, newsgroups, file transfers, internet chat, games, and browsing the World Wide Web. Users may stay connected so long as they are actively using that connection for the above purposes. Users may not use the services on a standby or inactive basis in order to maintain a connection. Pinging is expressly prohibited. Accordingly, Autonet Mobile, Inc maintains the right to terminate any member’s connection following any extended period of inactivity as determined by Autonet Mobile, Inc.

Acceptable Use Policy (continued)

3. Reporting Violations of Autonet's AUP

Autonet Mobile, Inc requests that anyone who believes that there is a violation of this AUP direct the information to director abuse department, at: abuse@autonetmobile.com. If available, please provide the following information:

- The IP address used to commit the alleged violation.
- The date and time of the alleged violation, Including the time zone or offset from GMT.
- Evidence of the alleged violation E-mail with full header information provides all of the above, as do syslog files. Other situations will require different methods of providing the above information.

Autonet Mobile, Inc may take any one or more of the following actions in response to complaints:

- Issue warnings: written or verbal.
- Suspend the member's newsgroup posting privileges.
- Suspend the member's account.
- Terminate the member's account.
- Bill the member for administrative costs and/or reactivation charges.
- Bring legal action to enjoin violations and/or to collect damages, if any, caused by violations.

4. Revisions to this Acceptable Use Policy

Autonet Mobile, Inc. reserves the right to revise, amend, or modify this AUP, our internet Service Agreement and our other policies and agreements at any time and in any manner. Notice of any revision, amendment, or modification will be posted in accordance with the Internet Service.

Autonet Mobile Software License

Important – read carefully. By removing the tamper label or otherwise using the software in your Autonet Mobile In-Car Router, you agree to be bound by the license terms and conditions below. If you do not agree to these terms and conditions you must immediately return your Autonet Mobile In-Car Router in its original condition and packaging to the point of purchase for a refund of your purchase price (after inspection).
Subject to these terms and conditions, Autonet Mobile, Inc. grants you a non-exclusive license, with no right to sublicense, to execute the software included with the Autonet Mobile In-Car Router or subsequently provided to you by Autonet Mobile (together, the "software") on your Autonet Mobile In-Car Router solely for your personal use on the intended features and functions of the Autonet Mobile In-Car Router. The license may be transferred only with the transfer of the Autonet Mobile In-Car Router on which Autonet Mobile, Inc. has installed the software; any transferee will be subject to the terms and conditions of this license.

This license will terminate automatically, without notice, if you fail to comply with the terms and conditions, including the restrictions, of this license.

Autonet Mobile, Inc. and its licensors own and retain all proprietary rights, including all patents, copyright, trade secret, trademark, and other intellectual property rights in and to the Autonet Mobile In-Car Router software. You acknowledge that the license granted above does not provide you with title to or ownership of the software, but only a right of limited use under these terms and conditions. The software embodies Autonet Mobile, Inc.'s trade secrets and other proprietary information and materials. Any attempt to modify, enhance, disassemble, decompile, reverse engineer or otherwise gain access to the source code of the software, to remove or unbundle the software from the Autonet Mobile In-Car Router, or to sublicense or distribute the software is strictly prohibited, except as expressly set for in the paragraph titled "GPLand lGPL software" and "other open source software" below or except as may be otherwise agreed by Autonet Mobile, Inc. in writing. Certain components of the software included with the Autonet Mobile In-Car Router are subject to the GNU general public license ("GPL"), the lesser GNU general public license ("lGPL"), or other "open source" or "free software" licenses ("open source software"). Some of the open source software is owned by third parties. The open source software is not subject to the terms and conditions of the section titled "Autonet Mobile, Inc. software license" above. Instead, each item of open source software is licensed under the terms of the end-user license that accompanies such open source software.

Autonet Mobile Software License (continued)

Nothing in this document limits your rights under, or grants you rights that supersede, the terms and conditions of any applicable end user license for the open source software. In particular, nothing in this document restricts your right to copy, modify, and distribute that open source software subject to the terms of the GPL and lGPL. As required by the terms of the GPL and lGPL, Autonet Mobile, Inc. makes the open source software provided under the GPL and lGPL available to the public in source code form on a CD. To receive a CD, please send $9.00 To Autonet Mobile, Inc. for the cost of preparing and mailing the CD to you. Requests can be mailed to Source Code CD Request, Autonet Mobile Inc.., 1700 Montgomery Ste. 111, San Francisco, CA 94111.

The following open source software is included with the Subaru Mobile Internet: GPL and lGPL software. The Subaru Mobile Internet is provided with the following software licensed under the GPL and lGPL. A copy of the GNU GPL license is available from the free software foundation (http://www.GNU.Org).

- Host AP driver from http://hostap.epitest
- iptables from http://www.netfilter.org
- Linux operating system
- Openswan http://www.openswan.org
- PPP from http://www.samba.org/ftp/unpacked/ppp/
- dnsmasq from http://www.thekelleys.org.uk/dnsmasq/
- nocat from http://nocat.net
- wifiadmin from http://wifiadmin.sourceforge.net/
- gpsd from http://gpsd.berlios.de/
- squid from http://www.squid-cache.org/
- radius from http://www.freeradius.org/
- madwifi from http://madwifi.org/
- wpa_supplicant: http://hostap.epitest.fi/wpa_supplicant/

Autonet Mobile Software License (continued)

Other Open Source Software

Autonet Mobile CarFi is provided with the following software licensed under bsd licenses or other open source software licenses. The software and license details are available from the referenced web-sites.

nginx from http://wiki.nginx.org/
openssh from the openbsd project (http://www.openssh.com)
madwifi from http://madwifi.org/
WPA supplicant from http://hostap.epitest.fi/wpa_supplicant/
hostapd from http://hostap.epitest.fi/hostapd/
ushare from http://ushare.geexbox.org/
mt-daapd from http://www.fireflymediaserver.org
bluez from http://www.bluez.org/
aufs from http://aufs.sourceforge.net/
php from http://www.php.net

Autonet Mobile Limited Warranty and Liability

No warranties of any kind are provided by Autonet Mobile, Inc. With respect to this product, except as stated in Autonet Mobile Limited Warranty below.
Autonet Mobile, Inc. warrants to the original end user purchaser (“you”) that the product shall be free of defects in materials and workmanship under normal use for one (1) year from the original date of purchase (the “warranty period”). These warranties are expressly in lieu of all other warranties, express or implied, including, without limitation, all implied warranties of merchantability and fitness for a particular purpose and any warranties arising from course of performance, course of dealing or trade usage.

Autonet Mobile, Inc.’s exclusive liability and your exclusive remedy hereunder is expressly limited to, at Autonet Mobile Inc.’s sole option and discretion, (a) exchange, repair or replacement of defective or nonconforming materials, parts or components; or (b) refund of all amounts paid directly to Autonet Mobile, Inc. for any defective product. Replacement products may be new or remanufactured.

The above shall apply whether Autonet Mobile, Inc.’s liability arises from any breach of its express warranty, breach of any obligation or otherwise with respect to the manufacture and sale of any units of the product, whether liability is asserted in contract or tort, including negligence and strict product liability. In no event shall Autonet Mobile, Inc. Be liable for special, indirect, incidental or consequential damages of any kind or nature due to any cause, regardless of whether Autonet Mobile, Inc. has been advised of the potential for such damages or if such damages are foreseeable, or for claims by any third party. Autonet Mobile Inc.’s maximum aggregate liability to purchaser shall not exceed the amount paid by purchaser for the product.

Autonet Mobile Limited Warranty and Liability (continued)

The foregoing warranties do not extend to: (i) nonconformities, defects, or errors in the product due to accident, abuse, misuse, or negligent use of the product or use in other than a normal and customary manner, environmental conditions not conforming to Autonet Mobile, Inc.'s specification, improper installation, or failure to follow prescribed operating and maintenance procedures; (ii) defects, errors or non conformities in the product due to modifications, alterations, additions, or changes to the product not authorized by Autonet Mobile, Inc., In writing in advance; (iii) normal wear and tear; (iv) damage caused by force of nature or act of any third person, including shipping damage; (v) service or repair of product by the purchaser without prior written consent from Autonet Mobile, Inc.; (vi) products designated by Autonet Mobile, Inc. As beta site test samples, experimental, developmental, reproduction, sample, incomplete or out-of-specification products; (vii) returned products if the original identification marks or tamper seals have been removed from the product or altered; (viii) condensation, water, or liquid damage; (ix) damage caused to the user's computer; (x) loss of data; or (xi) damage caused by viruses. The foregoing limitations will apply even if any warranty or remedy provided hereunder fails of its essential purpose. This warranty gives you specific legal rights, and you may also have other rights that vary by jurisdiction. Some jurisdictions do not allow limitations on how long an implied warranty lasts or the exclusion or limitation of incidental or consequential damages, so the above warranty limitations may not apply to you.

Legal Disclosure

Copyright © 2011 by Autonet Mobile, Inc.

All rights reserved. No part of this publication may be reproduced in any form or by any means or used to make any derivative work (such as translation, transformation, or adaptation) without written permission from Autonet Mobile, Inc. Autonet Mobile, Inc. Reserves the right to revise this publication and to make changes in content from time to time without obligation to provide notification of such revision or change. Autonet Mobile, Inc. Provides this guide without warranty of any kind, either implied or expressed, including, but not limited to, the implied warranties of merchantability and fitness for a particular purpose. Autonet Mobile, Inc. may make improvements or changes in the product(s) and product specifications described in this user guide at any time. Product may contain repackaged and/or reconditioned parts. By using this product, you agree to the terms and conditions of the Autonet Mobile, Inc. Service Agreement.
All trademarks, trade names, product names, service names, and service marks listed in this user guide or with the software are the exclusive property of their respective owners. Neither Autonet Mobile, Inc. Nor the Autonet Mobile In-Car Router are endorsed by or affiliated with the respective companies listed above and no such endorsement is implied. Autonet Mobile, Inc. Autonet mobile In-Car Router, the Autonet Mobile logo, and TRU technology are all trademarks of Autonet Mobile, Inc. All other trademarks, product names or service names, are the properties of their respective owners.

For technical support please call Autonet Mobile customer service center: 1-800-977-2107

Autonet Mobile assumes no responsibility for the configurations, security, or data files on your wireless device resulting from connection to Autonet Mobile's network. Anti-virus, privacy and security protection is the responsibility of the user.

Do not operate CarFi while driving or perform any function that takes your attention away from safely operating your vehicle. Any function that requires prolonged attention should be performed after coming to a complete stop. Always stop the vehicle in a safe location before performing these functions. Failure to do so may result in an accident.

If CarFi is found, please call: 1-800-977-2107. The CarFi is automatically disabled if reported lost or stolen.

Autonet Mobile customer support line:
1-800-977-2107

© 2011 Autonet Mobile Inc.

P/N: 186-1100-001, rev. 05