SAR TEST REPORT

Test Report No. : 12869960H-B

Applicant	:	**Murata Manufacturing Co., Ltd.**
Type of Equipment	:	**Communication Module**
Model No.	:	**TYPE1FJ**
FCC ID	:	**VPYLB1FJ**
Test regulation	:	**FCC47CFR 2.1093** ***For Permissive Change**
Test Result	:	**Complied (Refer to SECTION 4)**
Reported SAR(1g) Value		**The highest reported SAR(1g)** Body : 0.41 W/kg

1. This test report shall not be reproduced in full or partial, without the written approval of UL Japan, Inc.
2. The results in this report apply only to the sample tested.
3. This sample tested is in compliance with the limits of the above regulation.
4. The test results in this report are traceable to the national or international standards.
5. This test report covers SAR technical requirements. It does not cover administrative issues such as Manual or non-SAR test related Requirements. (if applicable)
6. The all test items in this test report are conducted by UL Japan, Inc. Ise EMC Lab.
7. This test report must not be used by the customer to claim product certification, approval, or endorsement by NVLAP, NIST, or any agency of the Federal Government.
8 The information provided from the customer for this report is identified in SECTION 1.

Date of test: July 2 and 3, 2019

Representative test engineer:
Yutaka Yoshida
Engineer
Consumer Technology Division

Approved by :
Takayuki Shimada
Leader
Consumer Technology Division

NVLAP® TESTING NVLAP LAB CODE 200572-0 ilac-MRA

This laboratory is accredited by the NVLAP LAB CODE 200572-0, U.S.A. The tests reported herein have been performed in accordance with its terms of accreditation.
*As for the range of Accreditation in NVLAP, you may refer to the WEB address,
http://japan.ul.com/resources/emc_accredited/

☐ The testing in which "Non-accreditation" is displayed is outside the accreditation scopes in UL Japan.
☒ There is no testing item of "Non-accreditation".

REVISION HISTORY

Original Test Report No.: 12869960H-B

Revision	Test report No.	Date	Page revised	Contents
- (Original)	12869960H-B	August 2, 2019	-	-

CONTENTS PAGE

SECTION1: Customer information **4**
SECTION2: Equipment under test (E.U.T.) **4**
2.1 Identification of E.U.T. 4
2.2 Product description 5
SECTION3: Test standard information **6**
3.1 Test Specification 6
3.2 Procedure 6
3.3 Additions or deviations to standard 6
3.4 Exposure limit 7
3.5 SAR 7
3.6 Test Location 7
SECTION4: Test result **8**
4.1 Result 8
4.2 Stand-alone SAR result 8
4.3 Simultaneous transmission SAR result 8
SECTION5: Tune-up tolerance information and software information **9**
SECTION6: RF Exposure Conditions (Test Configurations) **11**
6.1 Summary of the distance between antenna and surface of EUT 11
6.2 SAR test exclusion considerations according to KDB447498 D01 11
6.3 SAR test exclusion considerations according to KDB UMPC 13
SECTION7: Description of the Body setup **14**
7.1 Procedure for SAR test position determination 14
7.2 Test position for Body setup 14
SECTION8: Description of the operating mode **15**
8.1 Output Power and SAR test required 15
8.2 Correlation of Output Power 16
SECTION9: Test surrounding **17**
9.1 Measurement uncertainty 17
SECTION10: Parameter Check **18**
10.1 For SAR system check 19
10.2 For SAR measurement 20
SECTION11: System Check confirmation **21**
SECTION12: Measured and Reported (Scaled) SAR Results **22**
12.1 WLAN 2.4GHz Band 24
12.2 Bluetooth 24
SECTION13: Test instruments **25**
APPENDIX 1 : System Check **26**
APPENDIX 2 : SAR Measurement data **30**
APPENDIX 3 : System specifications **41**
APPENDIX 4 : Photographs of test setup **77**

SECTION1: Customer information

Company Name	:	Murata Manufacturing Co., Ltd.
Address	:	Shinagawa Intercity Tower C, 2-15-3, Konan Minato-ku, Tokyo 108-6290 Japan
Contact Person	:	Tatsuzo Kudoh
Telephone Number	:	+81-3-6433-3871
Facsimile Number	:	+81-3-6433-3781

The information provided from the customer is as follows;
- Applicant, Type of Equipment, Model No. on the cover and other relevant pages
- Operating/Test Mode(s) (Mode(s)) on all the relevant pages
- SECTION 1: Customer information
- SECTION 2: Equipment under test (E.U.T.)
- SECTION 5: Tune-up tolerance information and software information

* The laboratory is exempted from liability of any test results affected from the above information in SECTION 2.

SECTION2: Equipment under test (E.U.T.)

2.1 Identification of E.U.T.

<Information of the EUT>

Type of Equipment	:	Communication Module
Model No.	:	TYPE1FJ
Serial No.	:	PT200269
Rating	:	AC Adapter: Typ. DC 9.0 V, Min. DC 8.7 V, Max. DC 9.6 V Battery: Typ. DC 7.2 V, Min. DC 5.5 V, Max. DC 8.4 V
Receipt Date of Sample (Information from test lab.)	:	July 1, 2019
Country of Mass-production	:	China
Condition of EUT	:	Engineering prototype (Not for Sale: This sample is equivalent to mass-produced items.)
Modification of EUT	:	No Modification by the test lab

2.2 Product description

Model: TYPE1FJ (referred to as the EUT in this report) is a Communication Module.

Radio Specification

WLAN (IEEE802.11b/g/n-20)

Equipment Type	Transceiver
Frequency of Operation	2412 MHz - 2462 MHz
Type of Modulation	DSSS, OFDM
Bandwidth & Channel spacing	20 MHz & 5 MHz
Method of frequency generation	Synthesizer
Antenna Type	Monopole Pattern Antenna
Antenna Gain	+0.8 dBi

Bluetooth (Ver. 4.1 with EDR function)

Equipment Type	Transceiver
Frequency of Operation	2402 MHz - 2480 MHz
Type of Modulation	BT: FHSS (GFSK, π/4DQPSK, 8DPSK) LE: GFSK
Bandwidth & Channel spacing	BT: 1 MHz & 1 MHz LE: 2 MHz & 2 MHz
Method of frequency generation	Synthesizer
Antenna Type	Monopole Pattern Antenna
Antenna Gain	+0.8 dBi

SECTION3: Test standard information

3.1 Test Specification

Title : **FCC47CFR 2.1093**
Radiofrequency radiation exposure evaluation: portable devices.
: **IEEE Std 1528-2013:**
IEEE Recommended Practice for Determining the Peak Spatial-Average Specific Absorption Rate (SAR) in the Human Head from Wireless Communications Devices: Measurement Techniques.

: **Published RF exposure KDB procedures**

☑	**KDB447498D01(v06)**	RF Exposure Procedures and Equipment Authorization Policies for Mobile and Portable Devices
☐	**KDB447498D02(v02r01)**	SAR Measurement Procedures for USB Dongle Transmitters
☐	**KDB648474D04(v01r03)**	SAR Evaluation Considerations for Wireless Handsets
☐	**KDB941225D01(v03r01)**	3G SAR Measurement Procedures
☐	**KDB941225D05(v02r05)**	SAR Evaluation Considerations for LTE Devices
☐	**KDB941225D06(v02r01)**	SAR Evaluation Procedures for Portable Devices with Wireless Router Capabilities (Hot Spot SAR)
☑	**KDB941225D07(v01r02)**	SAR Evaluation Procedures for UMPC Mini-Tablet Devices
☐	**KDB616217D04(v01r02)**	SAR Evaluation Considerations for Laptop, Notebook, Netbook and Tablet Computers
☑	**KDB865664D01(v01r04)**	SAR Measurement Requirements for 100MHz to 6 GHz
☑	**KDB248227D01(v02r02)**	SAR Guidance for 802.11(Wi-Fi) Transmitters

Reference
[1]SPEAG uncertainty document (AN 15-7/AN19-17) for DASY 5 System from SPEAG (Schmid & Partner Engineering AG).

3.2 Procedure

Transmitter	**WLAN and Bluetooth**
Test Procedure	Published RF exposure KDB procedures
Category	FCC47CFR 2.1093
Note: UL Japan, Inc. ’s SAR Work Procedures 13-EM-W0429 and 13-EM-W0430	

3.3 Additions or deviations to standard

Other than above, no addition, exclusion nor deviation has been made from the standard.

3.4 Exposure limit

(A) Limits for Occupational/Controlled Exposure (W/kg)

Spatial Average (averaged over the whole body)	Spatial Peak (averaged over any 1g of tissue)	Spatial Peak (hands/wrists/feet/ankles averaged over 10g)
0.4	8.0	20.0

(B) Limits for General population/Uncontrolled Exposure (W/kg)

Spatial Average (averaged over the whole body	Spatial Peak (averaged over any 1g of tissue)	Spatial Peak (hands/wrists/feet/ankles averaged over 10g)
0.08	1.6	4.0

Occupational/Controlled Environments: are defined as locations where there is exposure that may be incurred by people who are aware of the potential for exposure, (i.e. as a result of employment or occupation).

General Population/Uncontrolled Environments: are defined as locations where there is the exposure of individuals who have no knowledge or control of their exposure.

NOTE:GENERAL POPULATION/UNCONTROLLED EXPOSURE
SPATIAL PEAK(averaged over any 1g of tissue) LIMIT
1.6 W/kg

3.5 SAR

Specific Absorption Rate (SAR): The time derivative (rate) of the incremental energy (dW) absorbed by (dissipated in) an incremental mass (dm) contained in a volume element (dV) of a given density (ρ), as shown in the following equation:

$$\mathrm{SAR} = \frac{\mathrm{d}}{\mathrm{dt}}\left(\frac{\mathrm{dW}}{\mathrm{dm}}\right) = \frac{\mathrm{d}}{\mathrm{dt}}\left(\frac{\mathrm{dW}}{\rho \mathrm{dV}}\right)$$

SAR is expressed in units of watts per kilogram (W/kg) or equivalently milliwatts per gram (mW/g).

SAR is related to the E-field at a point by the following equation:

$$\mathrm{SAR} = \frac{\sigma |\mathrm{E}|^2}{\rho}$$

where
σ = conductivity of the tissue (S/m)
ρ = mass density of the tissue (kg/m3)
E = rms E-field strength (V/m)

3.6 Test Location

UL Japan, Inc. Ise EMC Lab.
Shielded room for SAR testings
NVLAP Lab. code: 200572-0 / FCC Test Firm Registration Number: 199967 / ISED SAR Lab Company Number: 2973C
4383-326 Asama-cho, Ise-shi, Mie-ken 516-0021 JAPAN
Telephone : +81 596 24 8999 Facsimile : +81 596 24 8124

SECTION4: Test result

4.1 Result

Complied
Highest values at each band are listed next section.

4.2 Stand-alone SAR result

Reported SAR
Measured SAR is scaled to the maximum tune-up tolerance limit by the following formulas.
Reported SAR= Measured SAR [W/kg] * Scaled factor
Maximum tune-up tolerance limit is by the specification from a customer.

* Scaled factor = Maximum tune-up tolerance limit [mW] / Measured power [mW]

Body SAR

Mode	Freq. (MHz)	Power (dBm)		Scaled factor	1-g SAR (W/kg)	
		Tune-up upper Power	Measured average Power		Meas.	Reported
WLAN11b	2462	10.50	8.98	1.419	0.291	0.413
Bluetooth BDR	2480	8.50	7.95	1.135	0.291	0.330

Note(s):
The sample used by the SAR test is not more than 2 dB lower than the maximum tune-up tolerance limit. That is, measured power is included the tune-up tolerance range.

For WLAN/Bluetooth Maximum tune-up tolerance limit is defined by a customer as duty100%.

*Details are shown at section 12.

4.3 Simultaneous transmission SAR result

Wireless LAN and Bluetooth do not transmit simultaneously.

SECTION5: Tune-up tolerance information and software information

Maximum tune-up tolerance limit

Mode	Band	Maximum tune-up tolerance limit [dBm]	Maximum tune-up tolerance limit [mW]
WLAN 11b	2.4GHz	10.50	11.22
WLAN 11g	2.4GHz	10.50	11.22
WLAN 11n20	2.4GHz	10.50	11.22
Bluetooth DH5 BDR	2.4GHz	8.50	7.08
Bluetooth 2DH5 EDR	2.4GHz	8.50	7.08
Bluetooth 3DH5 EDR	2.4GHz	8.50	7.08
Bluetooth LE	2.4GHz	8.50	7.08

For WLAN/Bluetooth Maximum tune-up tolerance limit is defined by a customer as duty100%.

Software setting

*The power value of the EUT was set for testing as follows (setting value might be different from product specification value);
[WLAN]
Power settings: 11b: 9, 11g: 9, 11n20: 9
Software: MFG Tool Version 7.10.323.48

[Bluetooth]
Power settings: Config:0136
Software: Blue Tool ver.1.8.9.3

*This setting of software is the worst case.
The test was performed with condition that obtained the maximum average power (Burst) in pre-check.
Any conditions under the normal use do not exceed the condition of setting.
In addition, end users cannot change the settings of the output power of the product.

Duty Confirmation for Bluetooth

DH5

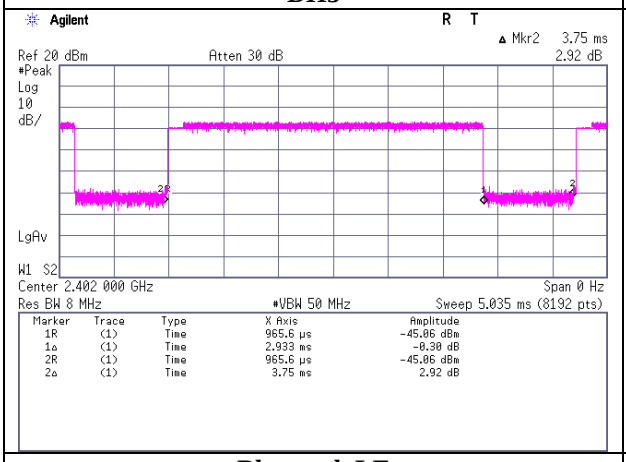

3DH5

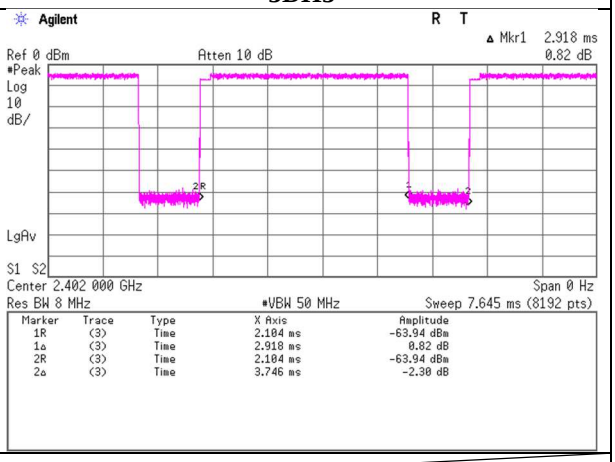

Bluetooth LE

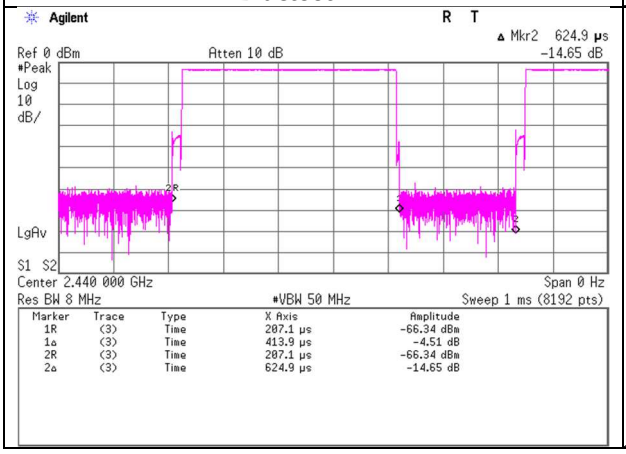

SECTION6: RF Exposure Conditions (Test Configurations)

6.1 Summary of the distance between antenna and surface of EUT

Test position	Distance
Front	7.7 mm
Rear	36.7 mm
Left	4.4 mm
Right	125.6 mm
Top	43.7mm
Bottom	11.1 mm

*Details are shown in appendix 4

6.2 SAR test exclusion considerations according to KDB447498 D01

The following is based on KDB447498D01.
1) The 1-g and 10-g SAR test exclusion thresholds for 100 MHz to 6 GHz at test separation distances ≤ 50 mm are determined by:
[(max. power of channel, including tune-up tolerance, mW)/(min. test separation distance, mm)] ·[√f(GHz)] ≤ 3.0 for 1-g SAR and ≤ 7.5 for 10-g extremity SAR

1. The upper frequency of the frequency band was used in order to calculate standalone SAR test exclusion considerations.
2. Power and distance are rounded to the nearest mW and mm before calculation
3. The result is rounded to one decimal place for comparison
4. The test exclusions are applicable only when the minimum test separation distance is ≤ 50 mm and for transmission frequencies between 100 MHz and 6 GHz. When the minimum test separation distance is < 5 mm, a distance of 5 mm is applied to determine SAR test exclusion. When the separation of antenna to EUT's surfaces and edges are ≤ 50 mm, the separation distance used for the SAR exclusion calculations is 5 mm.
5. "N/A" displayed on below exclusion calculation means not applicable this formula since distance between antenna and surface is > 50 mm.

When the calculated threshold value by a numerical formula above-mentioned in the following table is 3.0 or less, SAR test is excluded.

SAR exclusion calculations for antenna <50mm from the user

Antenna	Tx Interface	Frequency (MHz)	Output Power		Calculated Threshold Value					
			dBm	mW	Top	Bottom	Right	Left	Front	Rear
Main	11b	2462	10.50	11	3.5 -MEASURE-	3.5 -MEASURE-	N/A	3.5 -MEASURE-	3.5 -MEASURE-	3.5 -MEASURE-
Main	BT	2480	8.50	7	2.2 -EXEMPT-	2.2 -EXEMPT-	N/A	2.2 -EXEMPT-	2.2 -EXEMPT-	2.2 -EXEMPT-
Main	BTLE	2480	8.50	7	2.2 -EXEMPT-	2.2 -EXEMPT-	N/A	2.2 -EXEMPT-	2.2 -EXEMPT-	2.2 -EXEMPT-

2) At 100 MHz to 6 GHz and for test separation distances > 50 mm, the SAR test exclusion threshold is determined according to the following.

a) [(3·50)/(√f(GHz))) + (test separation distance - 50 mm)·(f(MHz)/150)] mW at > 100 MHz and ≤ 1500 MHz

b) [(3·50)/(√f(GHz))) + (test separation distance - 50 mm)·10] mW at > 1500 MHz and ≤ 6 GHz

1. The upper frequency of the frequency band was used in order to calculate standalone SAR test exclusion considerations.
2. Power and distance are rounded to the nearest mW and mm before calculation
3. "N/A" displayed on below exclusion calculation means not applicable this formula since distance between antenna and surface is < 50 mm.

When output power is less than the calculated threshold value by a numerical formula above-mentioned in the following table, SAR test is excluded.

SAR exclusion calculations for antenna >50mm from the user

Antenna	Tx Interface	Frequency (MHz)	Output Power		Calculated Threshold Value					
			dBm	mW	Top	Bottom	Right	Left	Front	Rear
Main	11b	2462	10.50	11	N/A	N/A	851.6 mW -EXEMPT-	N/A	N/A	N/A
Main	BT	2480	8.50	7	N/A	N/A	851.3 mW -EXEMPT-	N/A	N/A	N/A
Main	BTLE	2480	8.50	7	N/A	N/A	851.3 mW -EXEMPT-	N/A	N/A	N/A

6.3 SAR test exclusion considerations according to KDB UMPC

Based on KDB941225D07, UMPC mini-tablet devices must be tested for 1-g SAR on all surfaces and side edges with a transmitting antenna location at ≦25 mm from that surface or edges, at 5 mm separation from a flat phantom, for the data modes, wireless technologies and frequency bands by the devices to determine SAR compliance.

KDB 941225 UMPC

Antenna	Tx Interface	Frequency (MHz)	Output Power		SAR test required					
			dBm	mW	Top	Bottom	Right	Left	Front	Rear
Main	11b	2462	10.50	11.22	EXEMPT	MEASURE	EXEMPT	MEASURE	MEASURE	EXEMPT
Main	BT	2480	8.50	7.08	EXEMPT	MEASURE	EXEMPT	MEASURE	MEASURE	EXEMPT
Main	BTLE	2480	8.50	7.08	EXEMPT	MEASURE	EXEMPT	MEASURE	MEASURE	EXEMPT

SECTION7: Description of the Body setup

7.1 Procedure for SAR test position determination

-The tested procedure was performed according to the KDB 447498 D01 (Mobile and Portable Device RF Exposure Procedures and Equipment Authorization Policies).

7.2 Test position for Body setup

No.	Position	Test distance	WLAN	Bluetooth*1)
			Tested	Tested
1	Top	0mm	☐	☐
2	Bottom	0mm	☑	☑
3	Right	0mm	☐	☐
4	Left	0mm	☑	☑
5	Front	0mm	☑	☑
6	Rear	0mm	☐	☐

*The test was conservatively performed with test distance 0mm.

*1) Although Bluetooth test was except, the test was performed according to ISED test.

SECTION8: Description of the operating mode

8.1 Output Power and SAR test required

According to KDB248227D01, The initial test configuration for 2.4 GHz and 5 GHz OFDM transmission modes is determined by the 802.11 configuration with the highest maximum output power specified for production units, including tune-up tolerance, in each standalone and aggregated frequency band. SAR for the initial test configuration is measured using the highest maximum output power channel determined by the default power measurement procedures. When multiple configurations in a frequency band have the same specified maximum output power, the initial test configuration is determined according to the following steps applied sequentially.

1. The largest channel bandwidth configuration is selected among the multiple configurations with the same specified maximum output power.
2. If multiple configurations have the same specified maximum output power and largest channel bandwidth, the lowest order modulation among the largest channel bandwidth configurations is selected.
3. If multiple configurations have the same specified maximum output power, largest channel bandwidth and lowest order modulation, the lowest data rate configuration among these configurations is selected.
4. When multiple transmission modes (802.11a/g/n/ac) have the same specified maximum output power, largest channel bandwidth, lowest order modulation and lowest data rate, the lowest order 802.11 mode is selected; i.e., 802.11a is chosen over 802.11n then 802.11ac or 802.11g is chosen over 802.11n.

Wi-Fi 2.4GHz (DTS Band)
SISO

Band (GHz)	Mode	Data Rate	Ch #	Freq. (MHz)	Tune-up upper Power (dBm)	Measured average Power (dBm)	Initial test configuration	Note(s)
2.4	11b	1 Mbps	1	2412	10.50	9.28	Yes	
			6	2437	10.50	8.97		
			11	2462	10.50	8.98		
	11g	6 Mbps	1	2412	10.50	9.73		
			6	2437	10.50	9.59		
			11	2462	10.50	9.52		
	11n20	6.5 Mbps	1	2412	10.50	9.55		
			6	2437	10.50	9.42		
			11	2462	10.50	9.34		

Note(s):

1. Provided higher maximum output power is not specified for the other channels, channels 1, 6 and 11 are used to configure DSSS and OFDM channels for SAR measurements; otherwise, the closest adjacent channel with the highest maximum output power specified for production units should be tested instead of channels 1, 6 or 11.
2. When the highest reported SAR for the initial test configuration is adjusted by the ratio of the subsequent test configuration to initial test configuration specified maximum output power and the adjusted SAR is ≤ 1.2 W/kg, SAR is not required for that subsequent test configuration.
3. The standalone (SISO) SAR results were considered acceptable for the MIMO simultaneous transmission analysis as the MIMO power does not exceed the SISO power. The antenna separation distance will not be less than 50mm.
4. Initial SAR test channel was chosen. (shaded blue frame)

Bluetooth

Band (GHz)	Mode	Data Rate	Ch #	Freq. (MHz)	Measured average Power (dBm) BT Ant Tx	SAR Test (Yes/No)	Note(s)
2.4	BDR	DH5	0	2402	7.29	Yes	
			39	2441	7.70		
			78	2480	7.95		
	EDR	3DH5	0	2402	3.50	No	1
			39	2441	3.99		
			78	2480	4.55		
	LE	-	37	2402	7.37	No	1
			17	2441	7.47		
			39	2480	7.58		

Note(s):

1. According to KDB865664, SAR measurement is not required for EDR and LE when the specified tune-up tolerances for EDR and LE are lower than BDR.
2. SAR test channel was chosen. (shaded blue frame)

8.2 Correlation of Output Power

Correlation of Output Power between original test report and this SAR tests

Refer to for original report of IEEE802.11b/g/n Wi-Fi/Bluetooth module(M/N: TYPE1FJ, FCC ID: VPYLB1FJ, IC Number: 772C-LB1FJ, Report No: 11094714H-A-R1 (FCC), 1094714H-B-R1 (IC))

Refer to for original report of Bluetooth module (M/N: BRBT2G4RJ3, FCC ID: B3QBRBT2G4RJ3, IC Number: 1112C-BRBT2G4RJ3, Report No: 10191363H-A)

Band (GHz)	Mode	Data Rate	Ch #	Freq. (MHz)	Maximum measured average Power of Original test report (dBm)	Measured average Power in this SAR test (dBm)	Deviation (dB)
2.4	WLAN	11b 1 Mbps	6	2412	9.27	9.28	0.01
	Bluetooth	DH5	78	2480	7.88	7.95	0.07

SECTION9: Test surrounding

9.1 Measurement uncertainty

This measurement uncertainty budget is suggested by IEEE Std 1528(2013) and IEC62209-2:2010, and determined by Schmid & Partner Engineering AG (DASY5/6 Uncertainty Budget). Per KDB 865664 D01 SAR Measurement 100 MHz to 6 GHz Section 2.8.1., when the highest measured SAR(1g) within a frequency band is < 1.5W/kg, the extensive SAR measurement uncertainty analysis described in IEEE Std.1528 (2013) is not required in SAR reports submitted for equipment approval.

<Body>

Error Description	Uncert. value	Prob. Dist.	Div.	(ci) 1g	(ci) 10g	Std. Unc. (1g)	Std.Unc. (10g)
Measurement System							
Probe Calibration	± 6.55 %	N	1	1	1	±6.55%	±6.55%
Axial Isotropy	± 4.7 %	R	√3	0.7	0.7	±1.9%	±1.9%
Hemispherical Isotropy	± 9.6 %	R	√3	0.7	0.7	±3.9%	±3.9%
Linearity	± 4.7 %	R	√3	1	1	±2.7%	±2.7%
Modulation Response	± 2.4 %	R	√3	1	1	±1.4%	±1.4%
System Detection Limits	± 1.0 %	R	√3	1	1	±0.6%	±0.6%
Boundary Effects	± 2.0 %	R	√3	1	1	±1.2%	±1.2%
Readout Electronics	± 0.3 %	N	1	1	1	±0.3%	±0.3%
Response Time	± 0.8 %	R	√3	1	1	±0.5%	±0.5%
Integration Time	± 2.6 %	R	√3	1	1	±1.5%	±1.5%
RF Ambient Noise	± 3.0 %	R	√3	1	1	±1.7%	±1.7%
RF Ambient Reflections	± 3.0 %	R	√3	1	1	±1.7%	±1.7%
Probe Positioner	± 0.04 %	R	√3	1	1	±0.0%	±0.0%
Probe Positioning	± 0.8 %	R	√3	1	1	±0.5%	±0.5%
Post-processing	± 4.0 %	R	√3	1	1	±2.3%	±2.3%
Test Sample Related							
Device Holder	± 3.6 %	N	1	1	1	±3.6%	±3.6%
Test sample Positioning	± 2.9 %	N	1	1	1	±2.9%	±2.9%
Power Scaling	± 0.0 %	R	√3	1	1	±0.0%	±0.0%
Power Drift	± 5.0 %	R	√3	1	1	±2.9%	±2.9%
Phantom and Setup							
Phantom Uncertainty	± 7.6 %	R	√3	1	1	±4.4%	±4.4%
SAR correction	± 1.9 %	N	1	1	0.84	±1.9%	±1.6%
Liquid Conductivity (mea.)	+ 4.6 %	N	1	0.78	0.71	±3.6%	±3.3%
Liquid Permittivity (mea.)	- 1.4 %	N	1	0.23	0.26	±0.3%	±0.4%
Temp. unc. - Conductivity	± 3.4 %	R	√3	0.78	0.71	±1.5%	±1.4%
Temp. unc. - Permittivity	± 0.4 %	R	√3	0.23	0.26	±0.1%	±0.1%
Combined Std. Uncertainty						±12.5%	±12.3%
Expanded STD Uncertainty (κ =2)						±24.9%	±24.6%

Note: This uncertainty budget for validation is worst-case.
Table of uncertainties are listed for ISO/IEC 17025.

SECTION10: Parameter Check

The dielectric parameters were checked prior to assessment using the DAK dielectric probe kit.
The dielectric parameters measurement is reported in each correspondent section.

According to KDB865664 D01, +/- 5% tolerances are required for εr and σ and then below table which is the target value of the simulated tissue liquid is quoted from KDB865664 D01.

Target Frequency	Head		Body	
(MHz)	ε_r	σ (S/m)	ε_r	σ (S/m)
150	52.3	0.76	61.9	0.80
300	45.3	0.87	58.2	0.92
450	43.5	0.87	56.7	0.94
835	41.5	0.90	55.2	0.97
900	41.5	0.97	55.0	1.05
915	41.5	0.98	55.0	1.06
1450	40.5	1.20	54.0	1.30
1610	40.3	1.29	53.8	1.40
1800 – 2000	40.0	1.40	53.3	1.52
2450	39.2	1.80	52.7	1.95
3000	38.5	2.40	52.0	2.73
5800	35.3	5.27	48.2	6.00

(ε_r = relative permittivity, σ = conductivity and ρ = 1000 kg/m^3)

10.1 For SAR system check

DIELECTRIC PARAMETERS MEASUREMENT RESULTS											
Date	Ambient Temp. [deg.c]	Relative Humidity [%]	Liquid type	Liquid Temp. [deg.c]	Measured Frequency [MHz]	Parameters	Target Value	Measured	Deviation [%]	Limit [%]	Remark
2019/7/2	24.0	45	MBBL600-6000	23.5	2450	σ [mho/m]	1.95	2.02	**3.4**	+/-5	*1
						εr	52.7	52.3	-0.8	+/-5	
2019/7/3	24.0	45	MBBL600-6000	23.5	2450	σ [mho/m]	1.95	2.00	2.8	+/-5	*2
						εr	52.7	52.2	**-1.0**	+/-5	

σ : Conductivity / εr: Relative Permittivity
*1 The Target value is a parameter defined in KDB 865664D01.
*2 The dielectric parameters should be linearly interpolated between the closest pair of target frequencies to determine the applicable dielectric parameters corresponding to the device test frequency.

Correlation confirmation with measured TSL parameters of the calibration certificate of system check dipoles (Refer to Appendix 3)

Freq [MHz]	Model,S/N	Head		Body	
		σ	ε	σ	ε
2450	D2450,713	1.88	37.9	2.04	51.6

+/- 6% limit for deviation provided by manufacture tolerances are required for εr and σ and then below table which is the target value of the simulated tissue liquid is quoted from data measured TSL parameters of dipole calibration.

DIELECTRIC PARAMETERS MEASUREMENT RESULTS											
Date	Ambient Temp. [deg.c]	Relative Humidity [%]	Liquid type	Liquid Temp. [deg.c]	Measured Frequency [MHz]	Parameters	Target Value*1	Measured	Deviation [%]	Limit [%]	Remark
2019/7/2	24.0	45	MBBL600-6000	23.5	2450	σ [mho/m]	2.04	2.02	-1.2	+/-6	*1
						εr	51.6	52.3	**1.3**	+/-6	
2019/7/3	24.0	45	MBBL600-6000	23.5	2450	σ [mho/m]	2.04	2.00	**-1.8**	+/-6	*1
						εr	51.6	52.2	1.1	+/-6	

εr: Relative Permittivity / σ : Conductivity
*1 The Target value is a parameter defined in each Dipole.

10.2 For SAR measurement

DIELECTRIC PARAMETERS MEASUREMENT RESULTS											
Date	Ambient Temp. [deg.c]	Relative Humidity [%]	Liquid type	Liquid Temp. [deg.c]	Measured Frequency [MHz]	Parameters	Target Value	Measured	Deviation [%]	Limit [%]	Remark
2019/7/2	24.0	45	MBBL600-6000	23.5	2412	σ [mho/m]	1.91	2.00	**4.6**	+/-5	*2
						εr	52.8	52.6	-0.3	+/-5	
2019/7/3	24.0	45	MBBL600-6000	23.5	2412	σ [mho/m]	1.91	1.97	2.8	+/-5	*2
						εr	52.8	52.6	-0.3	+/-5	
2019/7/3	24.0	45	MBBL600-6000	23.5	2437	σ [mho/m]	1.94	2.00	3.4	+/-5	*2
						εr	52.7	52.3	-0.8	+/-5	
2019/7/3	24.0	45	MBBL600-6000	23.5	2462	σ [mho/m]	1.97	2.02	2.6	+/-5	*2
						εr	52.7	52.1	-1.2	+/-5	
2019/7/3	24.0	45	MBBL600-6000	23.5	2402	σ [mho/m]	1.90	1.96	2.9	+/-5	*2
						εr	52.8	52.7	0.0	+/-5	
2019/7/3	24.0	45	MBBL600-6000	23.5	2441	σ [mho/m]	1.94	2.00	3.2	+/-5	*2
						εr	52.7	52.3	-0.8	+/-5	
2019/7/3	24.0	45	MBBL600-6000	23.5	2480	σ [mho/m]	1.99	2.04	2.3	+/-5	*2
						εr	52.7	51.9	**-1.4**	+/-5	

σ : Conductivity / εr: Relative Permittivity
*1 The Target value is a parameter defined in KDB 865664D01.
*2 The dielectric parameters should be linearly interpolated between the closest pair of target frequencies to determine the applicable dielectric parameters corresponding to the device test frequency.

SECTION11: System Check confirmation

The measurements were performed in the flat section of the TWIN SAM or ELI phantom, shell thickness: 2.0 ±0.2 mm (bottom plate) filled with Body or Head simulating liquid of the following parameters.
The depth of tissue-equivalent liquid in a phantom must be ≥ 15.0 cm ± 0.5 cm for SAR measurements ≤ 3 GHz and ≥ 10.0 cm ± 0.5 cm for measurements > 3 GHz.
The DASY system with an E-Field Probe was used for the measurements.
The dipole was mounted on the small tripod so that the dipole feed point was positioned below the center marking of the flat phantom section and the dipole was oriented parallel to the body axis (the long side of the phantom).
The standard measuring distance was 10 mm (above 1GHz to 6GHz) and 15 mm (below 1GHz) from dipole center to the simulating liquid surface.
The coarse grid with a grid spacing of 12 mm (1GHz to 3GHz) and15 mm (below 1GHz) was aligned with the dipole.
For 5 GHz band - The coarse grid with a grid spacing of 10 mm was aligned with the dipole.
Special 7x7x7 (below 3 GHz) and/or 8x8x7 (above 3 GHz) fine cube was chosen for the cube.
Distance between probe sensors and phantom surface was set to 3 mm.
For 5 GHz band - Distance between probe sensors and phantom surface was set to 2.5 mm
The dipole input power (forward power) was 100 mW(For 5GHz band) or 250 mW(For other band).
The results are normalized to 1 W input power.

Target Value

Freq [MHz]	Model,S/N	Body	
		(SPEAG) 1g [W/kg]	(SPEAG) 10g[W/kg]
2450	D2450,713	52.00	24.44

*1 The target(reference) SAR values can be obtained from the calibration certificate of system validation dipoles(Refer to Appendix 2). The target SAR values are SAR measured value in the calibration certificate scaled to 1W.

Date Tested	Test Freq	Model,S/N	T.S. Liquid		Measured Results		Target (Ref. Value)	Delta ±10 %
					Zoom Scan	Normalize to 1 W		
2019/7/2	2450	D2450,713	Body	1g	12.60	50.4	52.00	-3.1
				10g	5.86	23.4	24.44	-4.1
2019/7/3	2450	D2450,713	Body	1g	12.40	49.6	52.00	-4.6
				10g	5.75	23.00	24.44	-5.9

SECTION12: Measured and Reported (Scaled) SAR Results

WLAN SAR Test Reduction criteria are as follows

- **KDB 248227 D01 (SAR Guidance for 802.11(Wi-Fi) Transmitters):**

SAR test reduction for 802.11 WLAN transmission mode configurations are considered separately for DSSS and OFDM. An initial test position is determined to reduce the number of tests required for certain exposure configurations with multiple test positions. An initial test configuration is determined for each frequency band and aggregated band according to maximum output power, channel bandwidth, wireless mode configurations and other operating parameters to streamline the measurement requirements. For 2.4 GHz DSSS, either the initial test position or DSSS procedure is applied to reduce the number of SAR tests; these are mutually exclusive. For OFDM, an initial test position is only applicable to next to the ear, UMPC mini-tablet and hotspot mode configurations, which is tested using the initial test configuration to facilitate test reduction. For other exposure conditions with a fixed test position, SAR test reduction is determined using only the initial test configuration.
The multiple test positions require SAR measurements in head, hotspot mode or UMPC mini-tablet configurations may be reduced according to the highest reported SAR determined using the *initial test position(s)* by applying the DSSS or OFDM SAR measurement procedures in the required wireless mode test configuration(s). The *initial test position(s)* is measured using the highest measured maximum output power channel in the required wireless mode test configuration(s). When the *reported* SAR for the *initial test position* is:

- ≤ 0.4 W/kg, further SAR measurement is not required for the other test positions in that exposure configuration and wireless mode combination within the frequency band or aggregated band. DSSS and OFDM configurations are considered separately according to the required SAR procedures.
- > 0.4 W/kg, SAR is repeated using the same wireless mode test configuration tested in the *initial test position* to measure the subsequent next closet/smallest test separation distance and maximum coupling test position, on the highest maximum output power channel, until the *reported* SAR is ≤ 0.8 W/kg or all required test positions are tested.
    - For subsequent test positions with equivalent test separation distance or when exposure is dominated by coupling conditions, the position for maximum coupling condition should be tested.
    - When it is unclear, all equivalent conditions must be tested.
- For all positions/configurations tested using the *initial test position* and subsequent test positions, when the *reported* SAR is > 0.8 W/kg, measure the SAR for these positions/configurations on the subsequent next highest measured output power channel(s) until the *reported* SAR is ≤ 1.2 W/kg or all required test channels are considered.
    - The additional power measurements required for this step should be limited to those necessary for identifying subsequent highest output power channels to apply the test reduction.
- When the specified maximum output power is the same for both UNII 1 and UNII 2A, begin SAR measurements in UNII 2A with the channel with the highest measured output power. If the reported SAR for UNII 2A is ≤ 1.2 W/kg, SAR is not required for UNII 1; otherwise treat the remaining bands separately and test them independently for SAR.
- When the specified maximum output power is different between UNII 1 and UNII 2A, begin SAR with the band that has the higher specified maximum output. If the highest reported SAR for the band with the highest specified power is ≤ 1.2 W/kg, testing for the band with the lower specified output power is not required; otherwise test the remaining bands independently for SAR.

To determine the *initial test position*, Area Scans were performed to determine the position with the *Maximum Value of SAR (measured)*. The position that produced the highest *Maximum Value of SAR* is considered the worst case position; thus used as the *initial test position*.

SAR Test Reduction criteria(Bluetooth) are as follows

KDB 447498 D01 (General RF Exposure Guidance):

Testing of other required channels within the operating mode of a frequency band is not required when the reported 1-g or 10-g SAR for the mid-band or highest output power channel is:

- ✧ ≤ 0.8 W/kg or 2.0 W/kg, for 1-g or 10-g respectively, when the transmission band is ≤ 100 MHz
- ✧ ≤ 0.6 W/kg or 1.5 W/kg, for 1-g or 10-g respectively, when the transmission band is between 100 MHz and 200 MHz
- ✧ ≤ 0.4 W/kg or 1.0 W/kg, for 1-g or 10-g respectively, when the transmission band is ≥ 200 MHz

- According to Notice 2016-DRS001 based on the IEEE1528 and IEC 62209 requirements, the low, mid and high frequency channels for the configuration with the highest SAR value must be tested regardless of the SAR value measured.
- When reported SAR value is exceed 1.2W/kg(if any), device holder perturbation verification is required; however, since distance between device holder and antenna of EUT is enough, it was not conducted.
- Reported SAR= Measured SAR [W/kg] · Scaled factor
  * Scaled factor = Maximum tune-up tolerance limit [mW] / Measured power [mW]
- Maximum tune-up tolerance limit is by the specification from a customer.

Note: Measured value is rounded round off to three decimal places

12.1 WLAN 2.4GHz Band

Test Position	Mode	Dist. (mm)	Ch #.	Freq. (MHz)	Power (dBm)		Scaled factor	1-g SAR (W/kg)	
					Tune-up upper Power	Measured average Power		Meas.	Reported
Bottom	802.11b	0	1	2412	10.50	9.28	1.32	0.021	0.028
			6	2437	10.50	8.97	1.42		
			11	2462	10.50	8.98	1.42		
Left	802.11b	0	1	2412	10.50	9.28	1.32	0.253	0.335
			6	2437	10.50	8.97	1.42	0.270	0.384
			11	2462	10.50	8.98	1.42	0.291	0.413
Front	802.11b	0	1	2412	10.50	9.28	1.32	0.204	0.270
			6	2437	10.50	8.97	1.42		
			11	2462	10.50	8.98	1.42		

OFDM was excluded from the following table according to KDB248227D01.
SAR is not required for the following 2.4 GHz OFDM conditions according to KDB248227D01.
1) When KDB447498D01 SAR test exclusion applies to the OFDM configuration.
2) When the highest reported SAR for DSSS is adjusted by the ratio of OFDM to DSSS specified maximum output power and the adjusted SAR is ≤ 1.2 W/kg.

Maximum tune-up tolerance limit		Maximum tune-up tolerance limit		OFDM scaled factor	Position	DSSS Reported SAR value [W/kg]	OFDM Estimated SAR value [W/kg]	Exclusion limit [W/kg]	**Standalone SAR request**
DSSS		OFDM							
[dBm]	[mW]	[dBm]	[mW]						
10.50	11.22	10.50	11.22	1.000	Left	0.413	0.413	< 1.2	**No**

Note(s):
- OFDM scaled factor = Maximum tune-up tolerance limit of OFDM [mW] / Maximum tune-up tolerance limit of DSSS [mW]
- Estimated SAR of OFDM= Reported SAR of DSSS[W/kg] · OFDM scaled factor

12.2 Bluetooth

Test Position	Mode	Data Rate	Dist. (mm)	Ch #.	Freq. (MHz)	Power (dBm)		Scaled factor	1-g SAR (W/kg)	
						Tune-up upper Power	Measured average Power		Meas.	Reported
Bottom	BDR	DH5	0	0	2402	8.50	7.29	1.32		
				39	2441	8.50	7.70	1.20		
				78	2480	8.50	7.95	1.14	0.011	0.012
Left	BDR	DH5	0	0	2402	8.50	7.29	1.32	0.161	0.213
				39	2441	8.50	7.70	1.20	0.221	0.266
				78	2480	8.50	7.95	1.14	0.291	0.330
Front	BDR	DH5	0	0	2402	8.50	7.29	1.32		
				39	2441	8.50	7.70	1.20		
				78	2480	8.50	7.95	1.14	0.251	0.285

Note(s):

SECTION13: Test instruments

Control No.	Instrument	Manufacturer	Model No	Serial No	Test Item	Calibration Date * Interval(month)
MDA-07	Dipole Antenna	Schmid&Partner Engineering AG	D2450V2	713	SAR(D2450)	2016/09/13 * 36
COTS-MSAR-03	Dasy5	Schmid&Partner Engineering AG	DASY5	-	SAR	-
MMBBL600-6000	Body Simulating Liquid	Schmid&Partner Engineering AG	SL AAB U16 BC	-	SAR	Pre Check
MNA-03	Vector Reflectometer	Copper Mountain Technologies	PLANAR R140	0030913	SAR	2019/04/01 * 12
MDPK-03	Dielectric assessment kit	Schmid&Partner Engineering AG	DAK-3.5	0008	SAR	2019/04/09 * 12
MOS-37	Digital thermometer	LKM electronic	DTM3000	-	SAR	2018/07/30 * 12
COTS-MSAR-04	Dielectric assessment software	Schmid&Partner Engineering AG	DAK	-	SAR	-
MDAE-02	Data Acquisition Electronics	Schmid&Partner Engineering AG	DAE4	1369	SAR	2019/05/08 * 12
MPB-08	Dosimetric E-Field Probe	Schmid&Partner Engineering AG	EX3DV4	3917	SAR	2019/05/15 * 12
MPF-03	2mm Oval Flat Phantom	Schmid&Partner Engineering AG	QDOVA001BB	1203	SAR	2019/05/14 * 12
MDH-04	Device holder	Schmid&Partner Engineering AG	Mounting device for transmitter	-	SAR	Pre Check
MOS-35	Digital thermometer	HANNA	Checktemp 4	-	SAR	2018/07/30 * 12
MRBT-03	SAR robot	Schmid&Partner Engineering AG	TX60 Lspeag	F13/5PPLD1/A/01	SAR	2019/04/26 * 12
MPM-11	Dual Power Meter	Agilent	E4419B	MY45102060	SAR	2018/08/07 * 12
MPSE-15	Power sensor	Agilent	E9301A	MY41498311	SAR	2018/08/07 * 12
MPSE-16	Power sensor	Agilent	E9301A	MY41498313	SAR	2018/08/07 * 12
MRFA-24	Pre Amplifier	R&K	R&K CGA020M602-2633R	B30550	SAR	2019/06/17 * 12
MSG-10	Signal Generator	Agilent	N5181A	MY47421098	SAR	2018/11/14 * 12
MAT-78	Attenuator	Telegrartner	J01156A0011	0042294119	SAR	Pre Check
MAT-81	Attenuator	Weinschel Associates	WA1-20-33	100131	SAR	2019/04/02 * 12
MPSE-24	Power sensor	Anritsu Limited	MA24106A	1026164	SAR	2018/08/07 * 12
COTS-MPSE-02	Software for MA24106A	Anritsu Limited	Anritsu PowerXpert	-	SAR	-
MHDC-12	Dual Directional Coupler	Hewlett Packard	772D	2839A0016	SAR(2-18GHz)	Pre Check
MRENT-S05	Dosimetric E-Field Probe	Schmid&Partner Engineering AG	EX3DV4	7372	SAR	2019/04/15 * 12
MRENT-S09	Data Acquisition Electronics	Schmid&Partner Engineering AG	DAE4	554	SAR	2019/04/13 * 12

The expiration date of the calibration is the end of the expired month.
All equipment is calibrated with valid calibrations. Each measurement data is traceable to the national or international standards.

As for some calibrations performed after the tested dates, those test equipment have been controlled by means of an unbroken chains of calibrations.

SAR room is checked before every testing and ambient noise is <0.012W/kg

APPENDIX 1 : System Check

20190702 2450MHz System Check

Communication System: UID 0, CW (0); Communication System Band: D2450 (2450.0 MHz); Frequency: 2450 MHz; Duty Cycle: 1:1
Medium parameters used: f = 2450 MHz; σ = 2.016 S/m; ε_r = 52.252; ρ = 1000 kg/m^3
Phantom section: Flat Section
Measurement Standard: DASY5 (IEEE/IEC/ANSI C63.19-2007)
DASY5 Configuration
Probe: EX3DV4 - SN3917; ConvF(7.59, 7.59, 7.59) @ 2450 MHz; Calibrated: 2019/05/15
Sensor-Surface: 1.4mm (Mechanical Surface Detection), Sensor-Surface: 0mm (Fix Surface)
Electronics: DAE4 Sn1369; Calibrated: 2019/05/08
Phantom: ELI v5.0 (20deg probe tilt); Type: QDOVA001BB; Serial: TP:1203
Measurement SW: DASY52, Version 52.10 (2); SEMCAD X Version 14.6.12 (7450)

Area Scan (81x71x1): Interpolated grid: dx=1.200 mm, dy=1.200 mm
Maximum value of SAR (interpolated) = 21.3 W/kg

Zoom Scan (7x7x7) (7x7x7)/Cube 0: Measurement grid: dx=5mm, dy=5mm, dz=5mm
Reference Value = 106.3 V/m; Power Drift = 0.10 dB
Peak SAR (extrapolated) = 25.7 W/kg
SAR(1 g) = 12.6 W/kg; SAR(10 g) = 5.86 W/kg
Maximum value of SAR (measured) = 20.8 W/kg

Z Scan (1x1x31): Measurement grid: dx=20mm, dy=20mm, dz=5mm
Maximum value of SAR (measured) = 10.5 W/kg

Date: 2019/07/02
Ambient Temp. : 24.0 degree.C. Liquid Temp.; 23.5 degree.C.

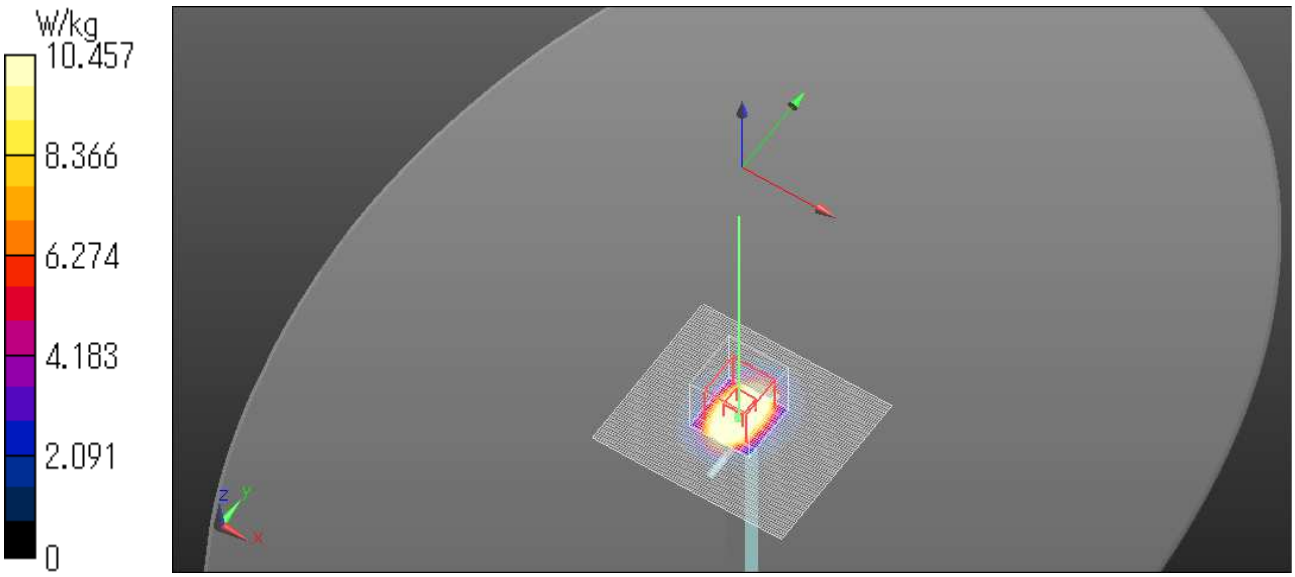

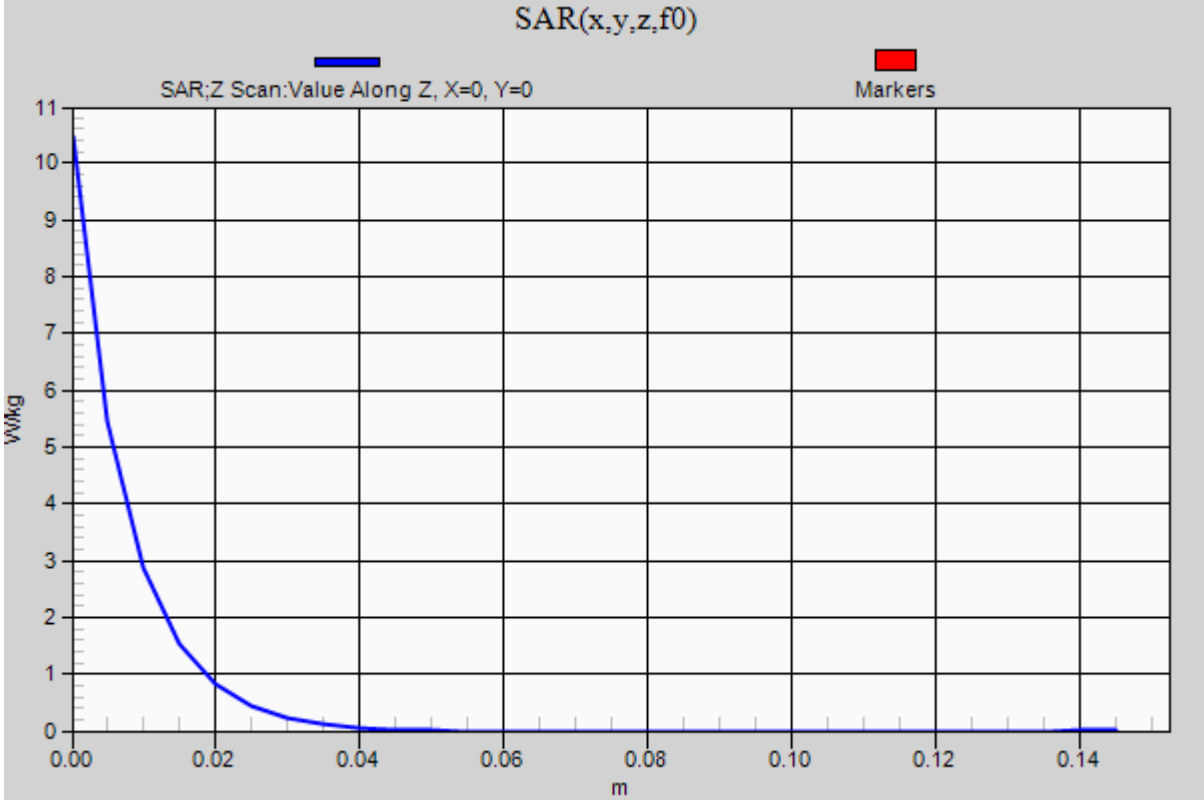
SAR(x,y,z,f0)
SAR;Z Scan:Value Along Z, X=0, Y=0
Markers
W/kg
11
10
9
8
7
6
5
4
3
2
1
0
0.00
0.02
0.04
0.06
0.08
0.10
0.12
0.14
m

20190703 2450MHz System Check

Communication System: UID 0, CW (0); Communication System Band: D2450 (2450.0 MHz); Frequency: 2450 MHz; Duty Cycle: 1:1
Medium parameters used: f = 2450 MHz; σ = 2.004 S/m; ε_r = 52.179; ρ = 1000 kg/m^3
Phantom section: Flat Section
Measurement Standard: DASY5 (IEEE/IEC/ANSI C63.19-2007)
DASY5 Configuration
Probe: EX3DV4 - SN3917; ConvF(7.59, 7.59, 7.59) @ 2450 MHz; Calibrated: 2019/05/15
Sensor-Surface: 1.4mm (Mechanical Surface Detection), Sensor-Surface: 0mm (Fix Surface)
Electronics: DAE4 Sn1369; Calibrated: 2019/05/08
Phantom: ELI v5.0 (20deg probe tilt); Type: QDOVA001BB; Serial: TP:1203
Measurement SW: DASY52, Version 52.10 (2); SEMCAD X Version 14.6.12 (7450)

Area Scan (81x71x1): Interpolated grid: dx=1.200 mm, dy=1.200 mm
Maximum value of SAR (interpolated) = 21.3 W/kg

Zoom Scan (7x7x7) (7x7x7)/Cube 0: Measurement grid: dx=5mm, dy=5mm, dz=5mm
Reference Value = 105.6 V/m; Power Drift = 0.05 dB
Peak SAR (extrapolated) = 25.3 W/kg
SAR(1 g) = 12.4 W/kg; SAR(10 g) = 5.75 W/kg
Maximum value of SAR (measured) = 20.6 W/kg

Z Scan (1x1x31): Measurement grid: dx=20mm, dy=20mm, dz=5mm
Maximum value of SAR (measured) = 10.3 W/kg

Date: 2019/07/03
Ambient Temp. : 24.0 degree.C. Liquid Temp.; 23.5 degree.C.

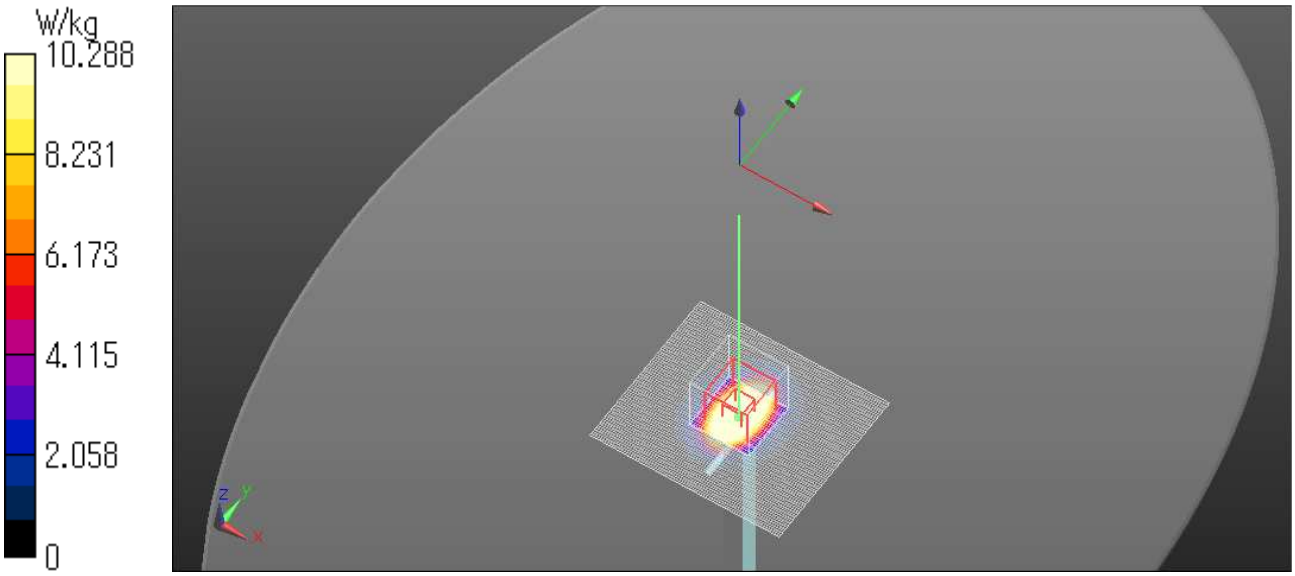

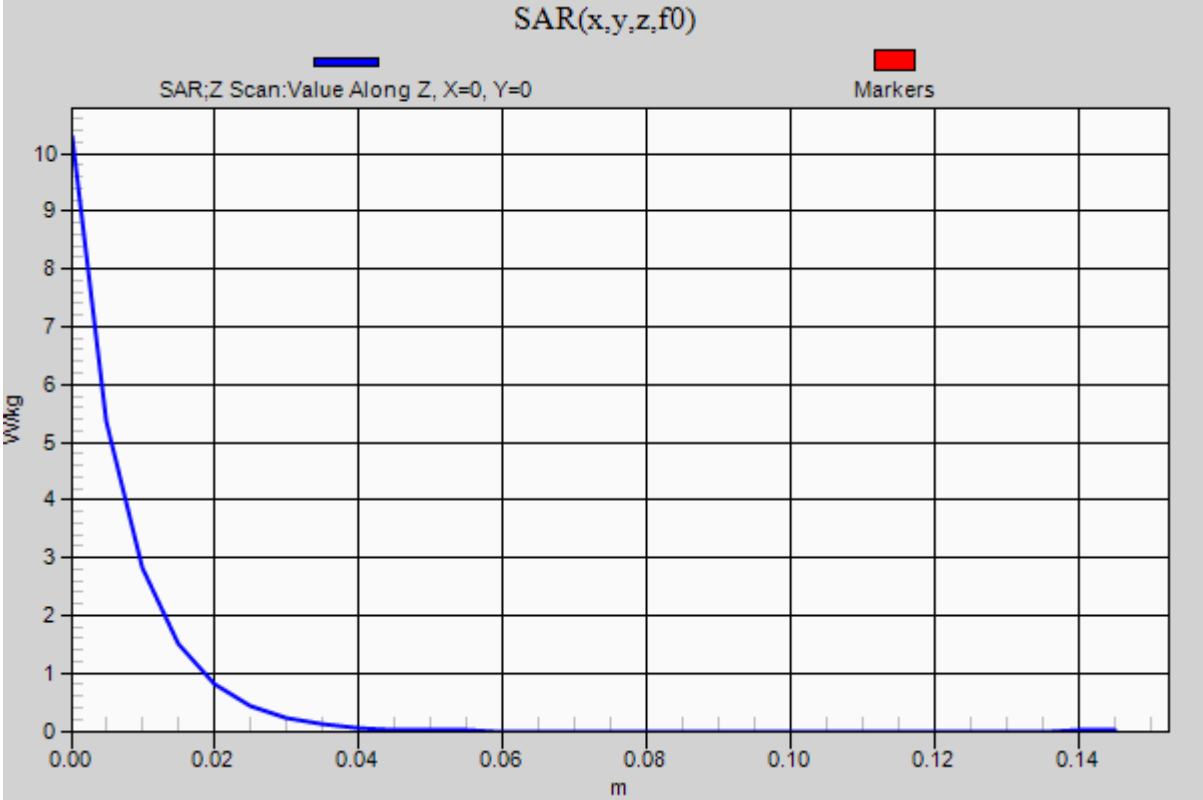
SAR(x,y,z,f0)
SAR;Z Scan:Value Along Z, X=0, Y=0
Markers
W/kg
10
9
8
7
6
5
4
3
2
1
0
0.00
0.02
0.04
0.06
0.08
0.10
0.12
0.14
m

APPENDIX 2 : SAR Measurement data

Evaluation procedure

The evaluation was performed with the following procedure:

Step 1: Measurement of the E-field at a fixed location above the ear point or central position of flat phantom was used as a reference value for assessing the power drop.

Step 2: The SAR distribution at the exposed side of head or body position was measured at a distance of each device from the inner surface of the shell. The area covered the entire dimension of the antenna of EUT and the horizontal grid spacing was 15 mm x 15 mm, 12 mm x 12 mm or 10mm x 10mm. Based on these data, the area of the maximum absorption was determined by spline interpolation.

Step 3: Around this point found in the Step 2 (area scan), a volume of 30mm x 30mm x 30mm or more was assessed by measuring 7 x 7 x 7 points at least for below 3GHz and a volume of 28 mm x 28mm x 22.5mm or more was assessed by measuring 8 x 8 x 6(ratio step method (*1)) points at least for 5GHz band.

And for any secondary peaks found in the Step2 which are within 2dB of maximum peak and not with this Step3 (Zoom scan) is repeated. On the basis of this data set, the spatial peak SAR value was evaluated under the following procedure:

(1). The data at the surface were extrapolated, since the center of the dipoles is 1mm(EX3DV4) away from the tip of the probe and the distance between the surface and the lowest measuring point is 1.3 mm. The extrapolation was based on a least square algorithm [4]. A polynomial of the fourth order was calculated through the points in z-axes.
This polynomial was then used to evaluate the points between the surface and the probe tip.

(2). The maximum interpolated value was searched with a straightforward algorithm. Around this maximum the SAR values averaged over the spatial volumes (1 g or 10 g) were computed by the 3D-Spline interpolation algorithm. The 3D-Spline is composed of three one-dimensional splines with the “Not a knot"-condition (in x, y and z-directions) [4], [5]. The volume was integrated with the trapezoidal-algorithm. One thousand points (10 x 10 x 10) were interpolated to calculate the average.

(3). All neighboring volumes were evaluated until no neighboring volume with a higher average value was found.

***1. Ratio step method parameters used;**
The first measurement point: 2mm from the phantom surface, the initial grid separation: 2mm, subsequent graded grid ratio: 1.5
These parameters comply with the requirement of the KDB 865664D01.

Step 4: Re-measurement of the E-field at the same location as in Step 1.
Confirmation after SAR testing
It was checked that the power drift [W] is within +/-5%.The verification of power drift during the SAR test is that DASY5 system calculates the power drift by measuring the e-filed at the same location at beginning and the end of the scan measurement for each test position.

DASY5 system calculation Power drift value[dB] =20log(Ea)/(Eb)
Before SAR testing : Eb[V/m]
After SAR testing : Ea[V/m]

Limit of power drift[W] =+/-5%
X[dB]=10log[P]=10log(1.05/1)=10log(1.05)-10log(1)=0.212dB

from E-filed relations with power.
p=E^2/η=E^2/
Therefore, The correlation of power and the E-filed
XdB=10log(P)=10log(E)^2=20log(E)

Therefore,
The calculated power drift of DASY5 System must be the less than +/-0.212dB.

Measurement data

WLAN 2.4G 11b 2412MHz Bottom 0mm

Communication System: UID 0, #WLAN 11a/b/g/n (0); Communication System Band: 11b/g/n (2.4G); Frequency: 2412 MHz; Duty Cycle: 1:1
Medium parameters used (interpolated): f = 2412 MHz; σ = 1.967 S/m; ε_r = 52.61; ρ = 1000 kg/m^3
Phantom section: Flat Section
Measurement Standard: DASY5 (IEEE/IEC/ANSI C63.19-2007)
DASY5 Configuration
Probe: EX3DV4 - SN3917; ConvF(7.59, 7.59, 7.59) @ 2412 MHz; Calibrated: 2019/05/15
Sensor-Surface: 1.4mm (Mechanical Surface Detection)
Electronics: DAE4 Sn1369; Calibrated: 2019/05/08
Phantom: ELI v5.0 (20deg probe tilt); Type: QDOVA001BB; Serial: TP:1203
Measurement SW: DASY52, Version 52.10 (2); SEMCAD X Version 14.6.12 (7450)

Area Scan (111x111x1): Interpolated grid: dx=1.200 mm, dy=1.200 mm

Maximum value of SAR (interpolated) = 0.0521 W/kg

Zoom Scan (7x7x7) (8x9x7)/Cube 0: Measurement grid: dx=5mm, dy=5mm, dz=5mm
Reference Value = 3.948 V/m; Power Drift = -0.17 dB
Peak SAR (extrapolated) = 0.0480 W/kg
SAR(1 g) = 0.021 W/kg; SAR(10 g) = 0.00757 W/kg

Maximum value of SAR (measured) = 0.0364 W/kg

Date: 2019/07/03
Ambient Temp. : 24.0 degree.C. Liquid Temp.; 23.5 degree.C.

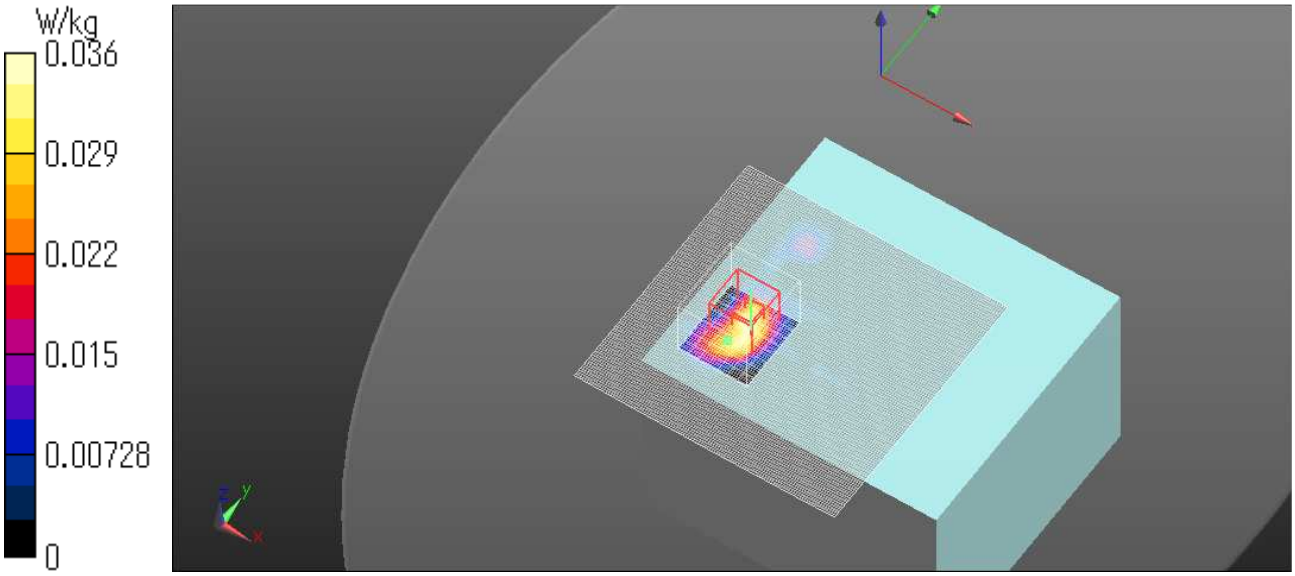

WLAN 2.4G 11b 2412MHz Left 0mm

Communication System: UID 0, #WLAN 11a/b/g/n (0); Communication System Band: 11b/g/n (2.4G); Frequency: 2412 MHz; Duty Cycle: 1:1
Medium parameters used (interpolated): f = 2412 MHz; σ = 2.001 S/m; ε_r = 52.576; ρ = 1000 kg/m^3
Phantom section: Flat Section
Measurement Standard: DASY5 (IEEE/IEC/ANSI C63.19-2007)
DASY5 Configuration
Probe: EX3DV4 - SN3917; ConvF(7.59, 7.59, 7.59) @ 2412 MHz; Calibrated: 2019/05/15
Sensor-Surface: 1.4mm (Mechanical Surface Detection)
Electronics: DAE4 Sn1369; Calibrated: 2019/05/08
Phantom: ELI v5.0 (20deg probe tilt); Type: QDOVA001BB; Serial: TP:1203
Measurement SW: DASY52, Version 52.10 (2); SEMCAD X Version 14.6.12 (7450)

Area Scan (111x141x1): Interpolated grid: dx=1.200 mm, dy=1.200 mm

Maximum value of SAR (interpolated) = 0.422 W/kg

Zoom Scan (7x7x7) (7x7x7)/Cube 0: Measurement grid: dx=5mm, dy=5mm, dz=5mm
Reference Value = 15.52 V/m; Power Drift = -0.01 dB
Peak SAR (extrapolated) = 0.612 W/kg
SAR(1 g) = 0.253 W/kg; SAR(10 g) = 0.099 W/kg

Maximum value of SAR (measured) = 0.459 W/kg

Date: 2019/07/02
Ambient Temp. : 24.0 degree.C. Liquid Temp.; 23.5 degree.C.

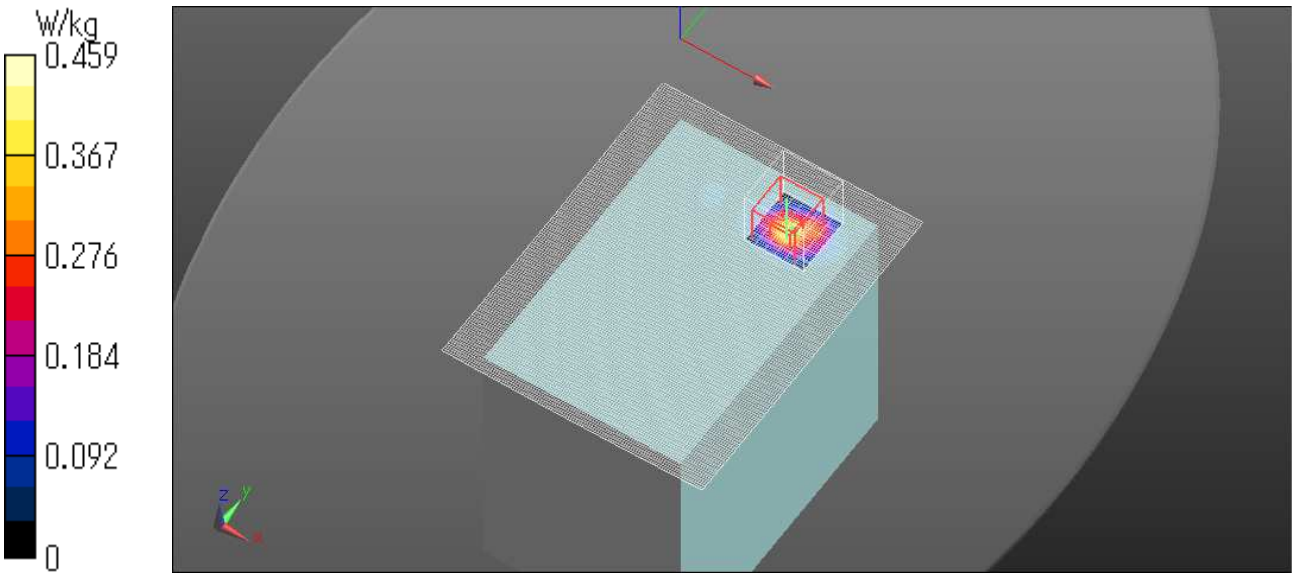

WLAN 2.4G 11b 2437MHz Left 0mm

Communication System: UID 0, #WLAN 11a/b/g/n (0); Communication System Band: 11b/g/n (2.4G); Frequency: 2437 MHz; Duty Cycle: 1:1
Medium parameters used (interpolated): f = 2437 MHz; σ = 2.004 S/m; ε_r = 52.312; ρ = 1000 kg/m^3
Phantom section: Flat Section
Measurement Standard: DASY5 (IEEE/IEC/ANSI C63.19-2007)
DASY5 Configuration
Probe: EX3DV4 - SN3917; ConvF(7.59, 7.59, 7.59) @ 2437 MHz; Calibrated: 2019/05/15
Sensor-Surface: 1.4mm (Mechanical Surface Detection)
Electronics: DAE4 Sn1369; Calibrated: 2019/05/08
Phantom: ELI v5.0 (20deg probe tilt); Type: QDOVA001BB; Serial: TP:1203
Measurement SW: DASY52, Version 52.10 (2); SEMCAD X Version 14.6.12 (7450)

Area Scan (111x81x1): Interpolated grid: dx=1.200 mm, dy=1.200 mm

Maximum value of SAR (interpolated) = 0.541 W/kg

Zoom Scan (7x7x7) (7x7x7)/Cube 0: Measurement grid: dx=5mm, dy=5mm, dz=5mm
Reference Value = 16.32 V/m; Power Drift = 0.19 dB
Peak SAR (extrapolated) = 0.651 W/kg
SAR(1 g) = 0.270 W/kg; SAR(10 g) = 0.106 W/kg

Maximum value of SAR (measured) = 0.487 W/kg

Date: 2019/07/03
Ambient Temp. : 24.0 degree.C. Liquid Temp.; 23.5 degree.C.

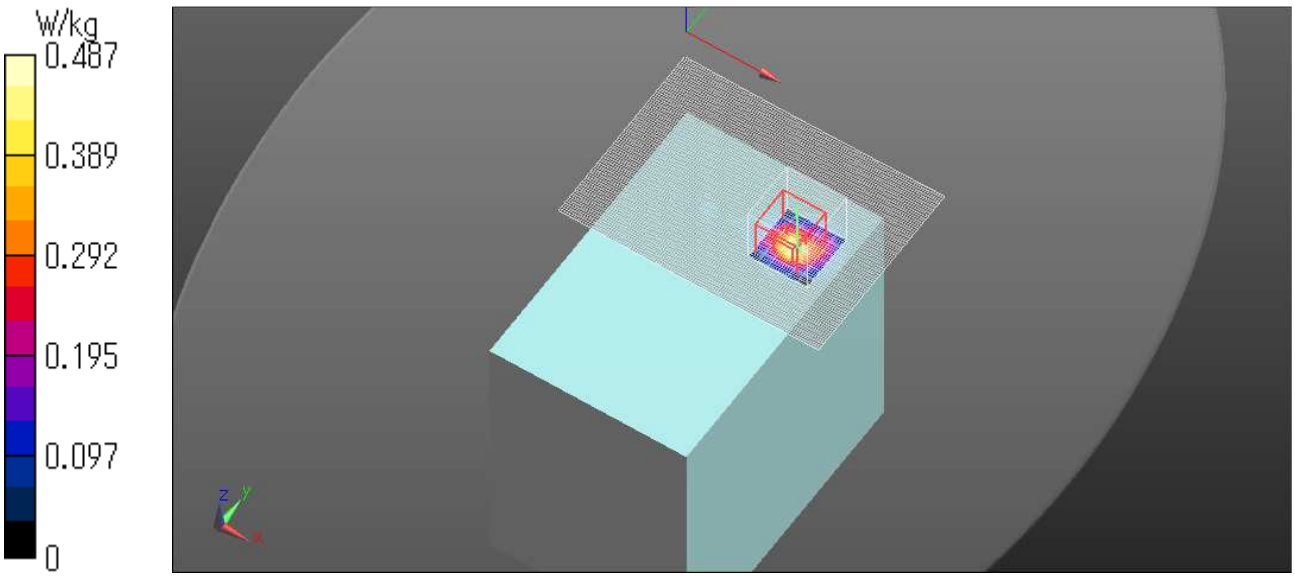

WLAN 2.4G 11b 2462MHz Left 0mm

Communication System: UID 0, #WLAN 11a/b/g/n (0); Communication System Band: 11b/g/n (2.4G); Frequency: 2462 MHz; Duty Cycle: 1:1
Medium parameters used (interpolated): f = 2462 MHz; σ = 2.019 S/m; ε_r = 52.064; ρ = 1000 kg/m^3
Phantom section: Flat Section
Measurement Standard: DASY5 (IEEE/IEC/ANSI C63.19-2007)
DASY5 Configuration
Probe: EX3DV4 - SN3917; ConvF(7.59, 7.59, 7.59) @ 2462 MHz; Calibrated: 2019/05/15
Sensor-Surface: 1.4mm (Mechanical Surface Detection)
Electronics: DAE4 Sn1369; Calibrated: 2019/05/08
Phantom: ELI v5.0 (20deg probe tilt); Type: QDOVA001BB; Serial: TP:1203
Measurement SW: DASY52, Version 52.10 (2); SEMCAD X Version 14.6.12 (7450)

Area Scan (111x81x1): Interpolated grid: dx=1.200 mm, dy=1.200 mm

Maximum value of SAR (interpolated) = 0.486 W/kg

Zoom Scan (7x7x7) (7x7x7)/Cube 0: Measurement grid: dx=5mm, dy=5mm, dz=5mm
Reference Value = 17.21 V/m; Power Drift = 0.01 dB
Peak SAR (extrapolated) = 0.704 W/kg
SAR(1 g) = 0.291 W/kg; SAR(10 g) = 0.113 W/kg

Maximum value of SAR (measured) = 0.550 W/kg

Date: 2019/07/03
Ambient Temp. : 24.0 degree.C. Liquid Temp.; 23.5 degree.C.

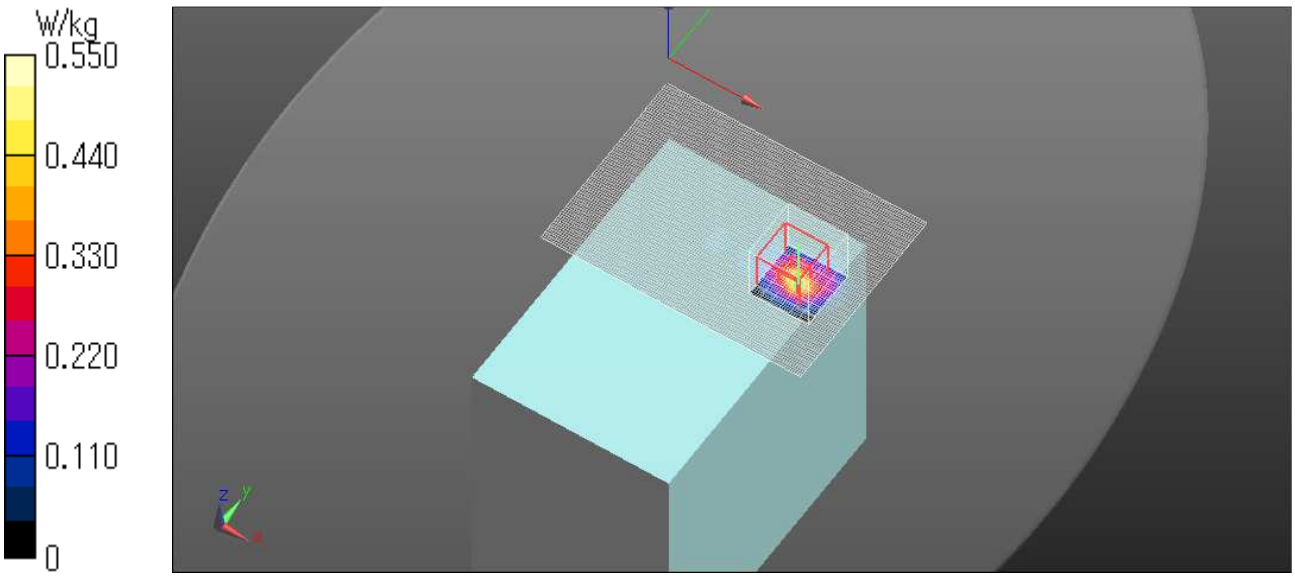

WLAN 2.4G 11b 2412MHz Front 0mm

Communication System: UID 0, #WLAN 11a/b/g/n (0); Communication System Band: 11b/g/n (2.4G); Frequency: 2412 MHz; Duty Cycle: 1:1
Medium parameters used (interpolated): f = 2412 MHz; σ = 1.967 S/m; ε_r = 52.61; ρ = 1000 kg/m^3
Phantom section: Flat Section
Measurement Standard: DASY5 (IEEE/IEC/ANSI C63.19-2007)
DASY5 Configuration
Probe: EX3DV4 - SN3917; ConvF(7.59, 7.59, 7.59) @ 2412 MHz; Calibrated: 2019/05/15
Sensor-Surface: 1.4mm (Mechanical Surface Detection)
Electronics: DAE4 Sn1369; Calibrated: 2019/05/08
Phantom: ELI v5.0 (20deg probe tilt); Type: QDOVA001BB; Serial: TP:1203
Measurement SW: DASY52, Version 52.10 (2); SEMCAD X Version 14.6.12 (7450)

Area Scan (111x141x1): Interpolated grid: dx=1.200 mm, dy=1.200 mm

Maximum value of SAR (interpolated) = 0.349 W/kg

Zoom Scan (7x7x7) (7x7x7)/Cube 0: Measurement grid: dx=5mm, dy=5mm, dz=5mm
Reference Value = 14.63 V/m; Power Drift = -0.06 dB
Peak SAR (extrapolated) = 0.485 W/kg
SAR(1 g) = 0.204 W/kg; SAR(10 g) = 0.083 W/kg

Maximum value of SAR (measured) = 0.385 W/kg

Date: 2019/07/03
Ambient Temp. : 24.0 degree.C. Liquid Temp.; 23.5 degree.C.

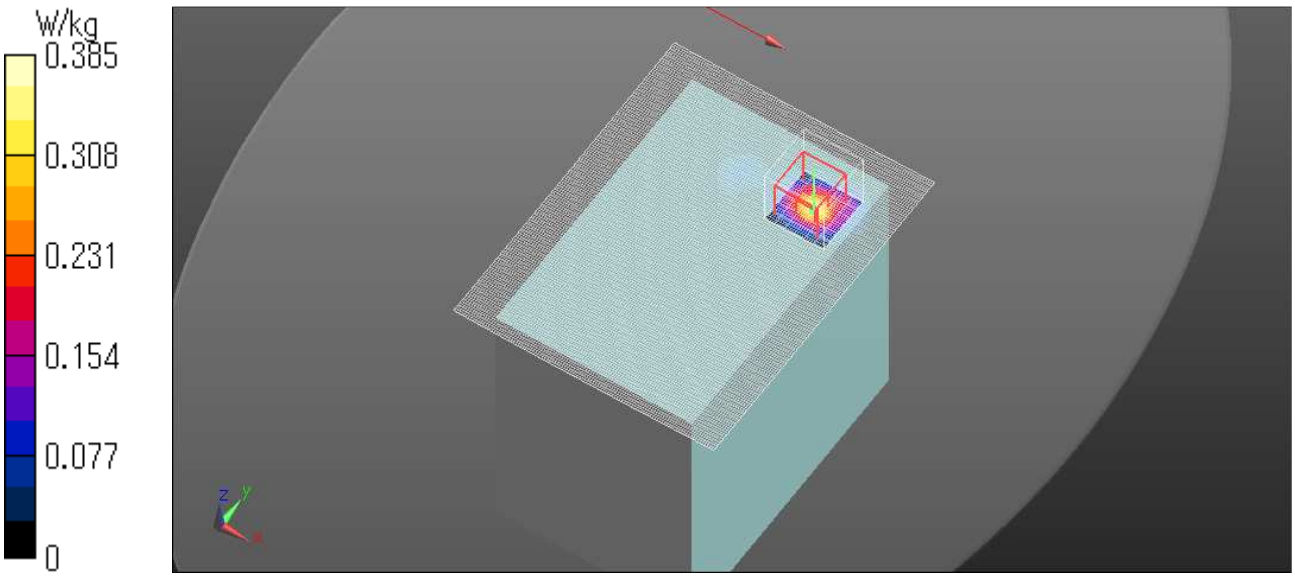

Bluetooth DH5 2480MHz Bottom 0mm

Communication System: UID 0, Buletooth (0); Communication System Band: DH5; Frequency: 2480 MHz; Duty Cycle: 1:1
Medium parameters used: f = 2480 MHz; σ = 2.038 S/m; ε_r = 51.916; ρ = 1000 kg/m^3
Phantom section: Flat Section
Measurement Standard: DASY5 (IEEE/IEC/ANSI C63.19-2007)
DASY5 Configuration
Probe: EX3DV4 - SN3917; ConvF(7.59, 7.59, 7.59) @ 2480 MHz; Calibrated: 2019/05/15
Sensor-Surface: 1.4mm (Mechanical Surface Detection)
Electronics: DAE4 Sn1369; Calibrated: 2019/05/08
Phantom: ELI v5.0 (20deg probe tilt); Type: QDOVA001BB; Serial: TP:1203
Measurement SW: DASY52, Version 52.10 (2); SEMCAD X Version 14.6.12 (7450)

Area Scan (111x111x1): Interpolated grid: dx=1.200 mm, dy=1.200 mm
Maximum value of SAR (interpolated) = 0.0367 W/kg

Zoom Scan (7x7x7) (7x7x7)/Cube 0: Measurement grid: dx=5mm, dy=5mm, dz=5mm
Reference Value = 3.341 V/m; Power Drift = 0.14 dB
Peak SAR (extrapolated) = 0.0430 W/kg
SAR(1 g) = 0.011 W/kg; SAR(10 g) = 0.00379 W/kg

Maximum value of SAR (measured) = 0.0235 W/kg

Date: 2019/07/03
Ambient Temp. : 24.0 degree.C. Liquid Temp.; 23.5 degree.C.

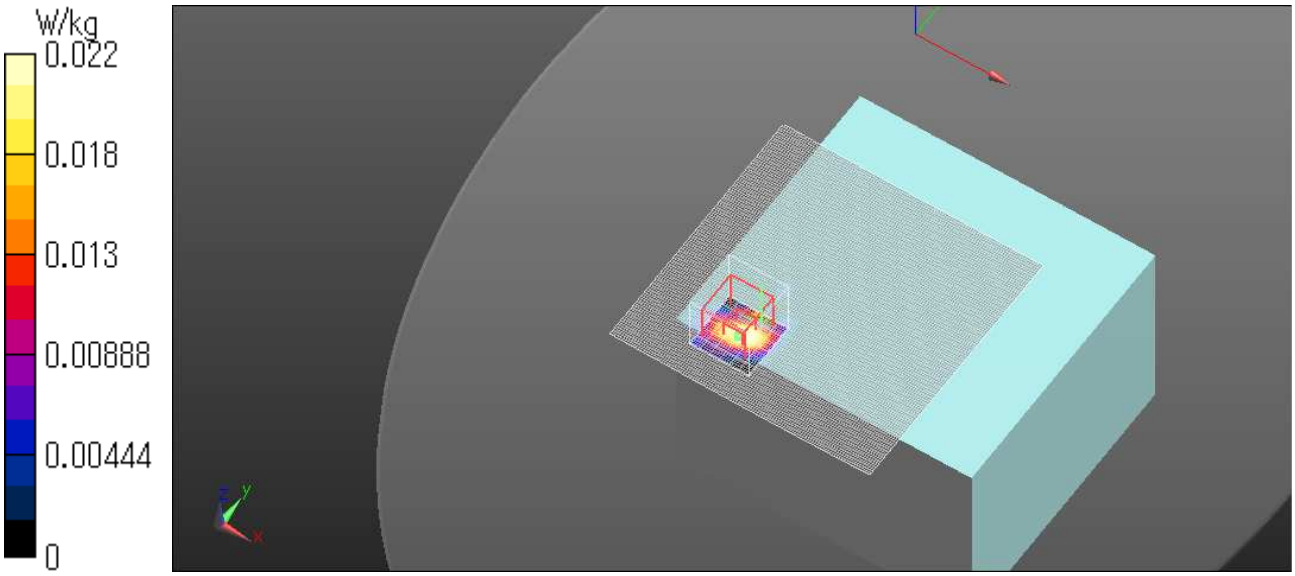

Bluetooth DH5 2402MHz Left 0mm

Communication System: UID 0, #Bluetooth (0); Communication System Band: Bluetooth; Frequency: 2402 MHz; Duty Cycle: 1:1
Medium parameters used (interpolated): f = 2402 MHz; σ = 1.959 S/m; ε_r = 52.741; ρ = 1000 kg/m^3
Phantom section: Flat Section
Measurement Standard: DASY5 (IEEE/IEC/ANSI C63.19-2007)
DASY5 Configuration
Probe: EX3DV4 - SN3917; ConvF(7.59, 7.59, 7.59) @ 2402 MHz; Calibrated: 2019/05/15
Sensor-Surface: 1.4mm (Mechanical Surface Detection)
Electronics: DAE4 Sn1369; Calibrated: 2019/05/08
Phantom: ELI v5.0 (20deg probe tilt); Type: QDOVA001BB; Serial: TP:1203
Measurement SW: DASY52, Version 52.10 (2); SEMCAD X Version 14.6.12 (7450)

Area Scan (111x81x1): Interpolated grid: dx=1.200 mm, dy=1.200 mm

Maximum value of SAR (interpolated) = 0.284 W/kg

Zoom Scan (7x7x7) (8x8x7)/Cube 0: Measurement grid: dx=5mm, dy=5mm, dz=5mm
Reference Value = 12.42 V/m; Power Drift = -0.04 dB
Peak SAR (extrapolated) = 0.381 W/kg
SAR(1 g) = 0.161 W/kg; SAR(10 g) = 0.063 W/kg

Maximum value of SAR (measured) = 0.276 W/kg

Date: 2019/07/03
Ambient Temp. : 24.0 degree.C. Liquid Temp.; 23.5 degree.C.

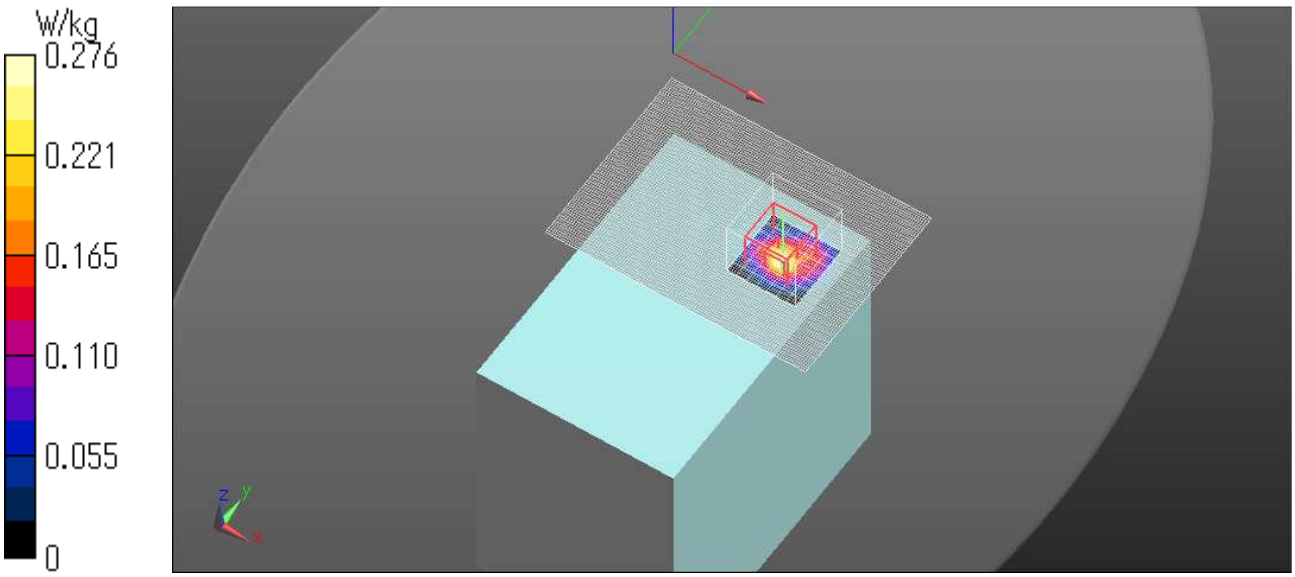

Bluetooth DH5 2441MHz Left 0mm

Communication System: UID 0, #Bluetooth (0); Communication System Band: Bluetooth; Frequency: 2441 MHz; Duty Cycle: 1:1
Medium parameters used (interpolated): f = 2441 MHz; σ = 2.004 S/m; ε_r = 52.27; ρ = 1000 kg/m^3
Phantom section: Flat Section
Measurement Standard: DASY5 (IEEE/IEC/ANSI C63.19-2007)
DASY5 Configuration
Probe: EX3DV4 - SN3917; ConvF(7.59, 7.59, 7.59) @ 2441 MHz; Calibrated: 2019/05/15
Sensor-Surface: 1.4mm (Mechanical Surface Detection)
Electronics: DAE4 Sn1369; Calibrated: 2019/05/08
Phantom: ELI v5.0 (20deg probe tilt); Type: QDOVA001BB; Serial: TP:1203
Measurement SW: DASY52, Version 52.10 (2); SEMCAD X Version 14.6.12 (7450)

Area Scan (111x81x1): Interpolated grid: dx=1.200 mm, dy=1.200 mm

Maximum value of SAR (interpolated) = 0.406 W/kg

Zoom Scan (7x7x7) (7x7x7)/Cube 0: Measurement grid: dx=5mm, dy=5mm, dz=5mm
Reference Value = 14.90 V/m; Power Drift = -0.01 dB
Peak SAR (extrapolated) = 0.534 W/kg
SAR(1 g) = 0.221 W/kg; SAR(10 g) = 0.085 W/kg

Maximum value of SAR (measured) = 0.411 W/kg

Date: 2019/07/03
Ambient Temp. : 24.0 degree.C. Liquid Temp.; 23.5 degree.C.

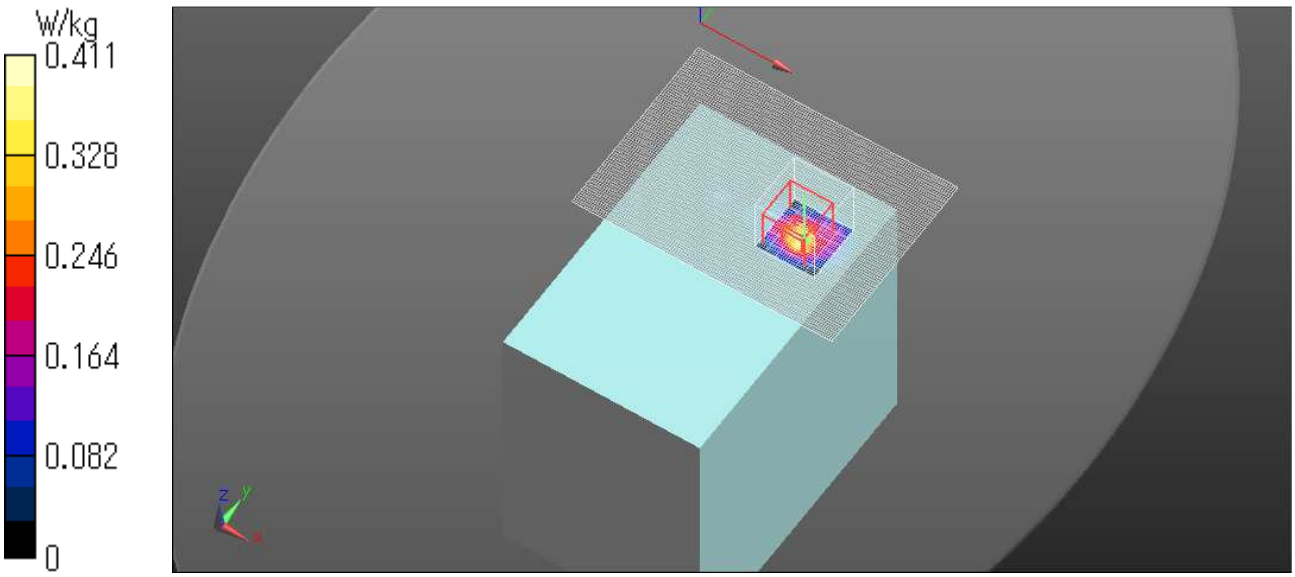

Bluetooth DH5 2480MHz Left 0mm

Communication System: UID 0, #Bluetooth (0); Communication System Band: Bluetooth; Frequency: 2480 MHz; Duty Cycle: 1:1
Medium parameters used: f = 2480 MHz; σ = 2.038 S/m; ε_r = 51.916; ρ = 1000 kg/m^3
Phantom section: Flat Section
Measurement Standard: DASY5 (IEEE/IEC/ANSI C63.19-2007)
DASY5 Configuration
Probe: EX3DV4 - SN3917; ConvF(7.59, 7.59, 7.59) @ 2480 MHz; Calibrated: 2019/05/15
Sensor-Surface: 1.4mm (Mechanical Surface Detection)
Electronics: DAE4 Sn1369; Calibrated: 2019/05/08
Phantom: ELI v5.0 (20deg probe tilt); Type: QDOVA001BB; Serial: TP:1203
Measurement SW: DASY52, Version 52.10 (2); SEMCAD X Version 14.6.12 (7450)

Area Scan (111x81x1): Interpolated grid: dx=1.200 mm, dy=1.200 mm
Maximum value of SAR (interpolated) = 0.484 W/kg

Zoom Scan (7x7x7) (7x7x7)/Cube 0: Measurement grid: dx=5mm, dy=5mm, dz=5mm
Reference Value = 17.21 V/m; Power Drift = -0.11 dB
Peak SAR (extrapolated) = 0.687 W/kg
SAR(1 g) = 0.291 W/kg; SAR(10 g) = 0.114 W/kg
Maximum value of SAR (measured) = 0.551 W/kg

Date: 2019/07/03
Ambient Temp. : 24.0 degree.C. Liquid Temp.; 23.5 degree.C.

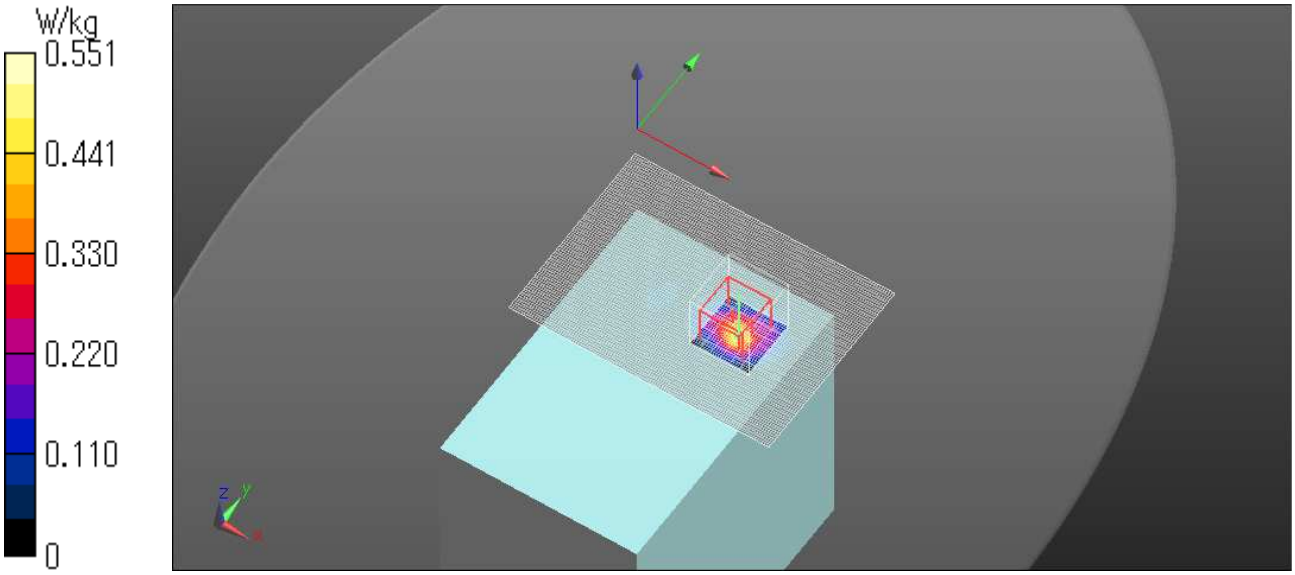

Bluetooth DH5 2480MHz Front 0mm

Communication System: UID 0, #Bluetooth (0); Communication System Band: Bluetooth; Frequency: 2480 MHz; Duty Cycle: 1:1
Medium parameters used: f = 2480 MHz; σ = 2.038 S/m; ε_r = 51.916; ρ = 1000 kg/m^3
Phantom section: Flat Section
Measurement Standard: DASY5 (IEEE/IEC/ANSI C63.19-2007)
DASY5 Configuration
Probe: EX3DV4 - SN3917; ConvF(7.59, 7.59, 7.59) @ 2480 MHz; Calibrated: 2019/05/15
Sensor-Surface: 1.4mm (Mechanical Surface Detection)
Electronics: DAE4 Sn1369; Calibrated: 2019/05/08
Phantom: ELI v5.0 (20deg probe tilt); Type: QDOVA001BB; Serial: TP:1203
Measurement SW: DASY52, Version 52.10 (2); SEMCAD X Version 14.6.12 (7450)

Area Scan (111x81x1): Interpolated grid: dx=1.200 mm, dy=1.200 mm
Maximum value of SAR (interpolated) = 0.426 W/kg

Zoom Scan (7x7x7) (7x7x7)/Cube 0: Measurement grid: dx=5mm, dy=5mm, dz=5mm
Reference Value = 15.82 V/m; Power Drift = -0.00 dB
Peak SAR (extrapolated) = 0.582 W/kg
SAR(1 g) = 0.251 W/kg; SAR(10 g) = 0.100 W/kg
Maximum value of SAR (measured) = 0.466 W/kg

Date: 2019/07/03
Ambient Temp. : 24.0 degree.C. Liquid Temp.; 23.5 degree.C.

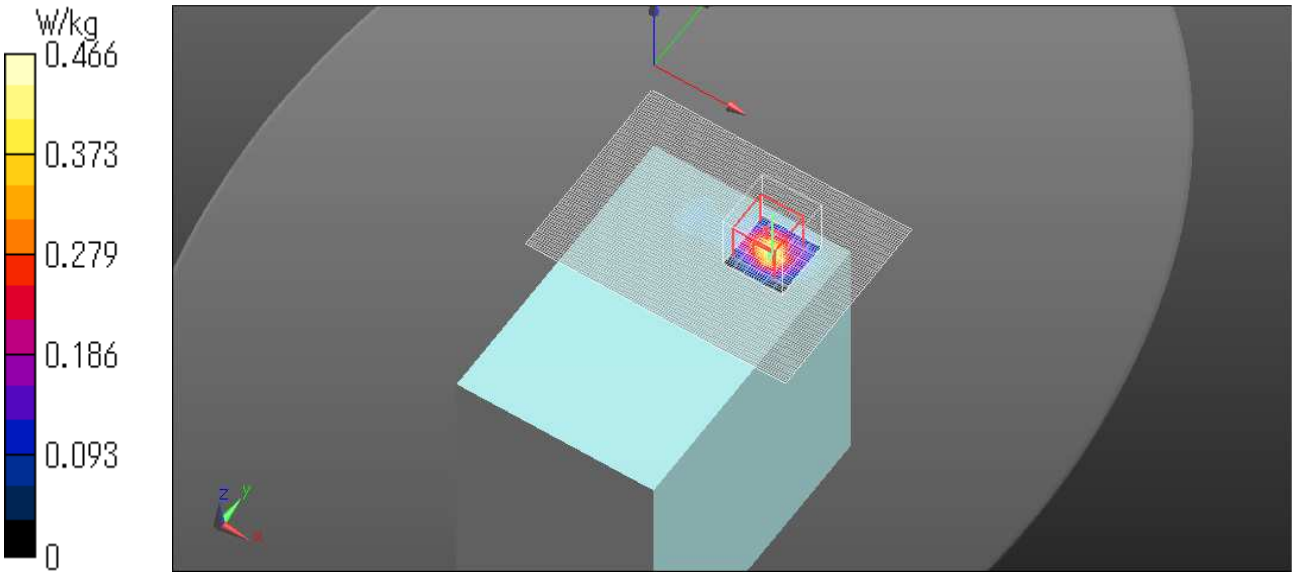

APPENDIX 3 : System specifications

Configuration and peripherals

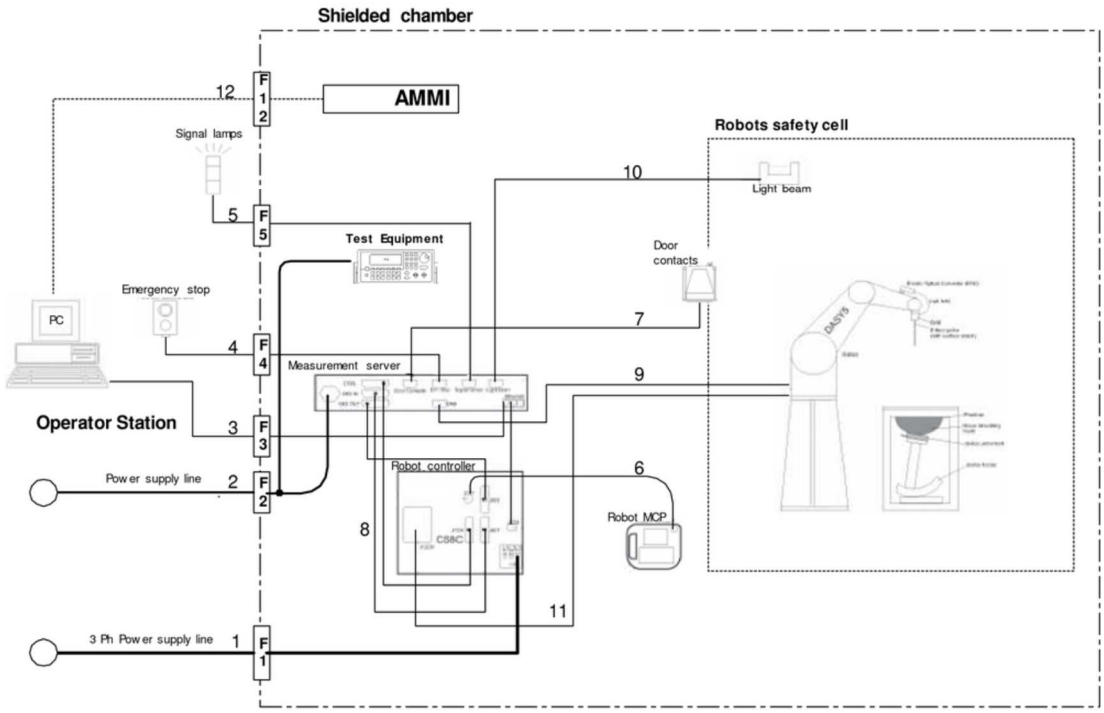

The DASY5 system for performing compliance tests consist of the following items:
Our system is DASY6; however, it behaves as DASY5.

a) A standard high precision 6-axis robot (Stäubli RX family) with controller and software.
An arm extension for accommodating the data acquisition electronics (DAE).

b) An isotropic field probe optimized and calibrated for the targeted measurement.

c) A data acquisition electronic (DAE), which performs the signal amplification, signal multiplexing, AD-conversion, offset measurements, mechanical surface detection, collision detection, etc. The unit is battery powered with standard or rechargeable batteries. The signal is optically transmitted to the EOC.

d) The Electro-optical converter (EOC) performs the conversion between optical and electrical of the signals for the digital communication to the DAE and for the analog signal from the optical surface detection.
The EOC is connected to the measurement server.

e) The function of the measurement server is to perform the time critical tasks such as signal filtering, control of the robot operation and fast movement interrupts.

f) The Light Beam used is for probe alignment. This improves the (absolute) accuracy of the probe positioning.

g) A computer running Windows 10 or 7 and the DASY5/6 software.

h) Remote control with teaches pendant and additional circuitry for robot safety such as warning lamps, etc.

i) The phantom, the device holder and other accessories according to the targeted measurement.

Specifications

a)Robot TX60L

Number of Axes	:	6
Nominal Load	:	2 kg
Maximum Load	:	5kg
Reach	:	920mm
Repeatability	:	+/-0.03mm
Control Unit	:	CS8c
Programming Language	:	VAL3
Weight	:	52.2kg
Manufacture	:	Stäubli Robotics

b)E-Field Probe

Model	:	EX3DV4
Construction	:	Symmetrical design with triangular core Built-in shielding against static charges PEEK enclosure material (resistant to organic solvents, e.g., glycol ether)
Frequency	:	10 MHz to > 6 GHz Linearity: ± 0.2 dB (30 MHz to 6 GHz)
Directivity	:	+/-0.3 dB in HSL (rotation around probe axis) +/-0.5 dB in tissue material (rotation normal probe axis)
Dynamic Range	:	10uW/g to > 100 mW/g;Linearity +/-0.2 dB(noise: typically < 1uW/g)
Dimensions	:	Overall length: 337 mm (Tip: 20 mm) Tip diameter: 2.5mm (Body: 12 mm) Typical distance from probe tip to dipole centers: 1 mm
Application	:	Highprecision dosimetric measurement in any exposure scenario (e.g., very strong gradient fields).Only probe which enables compliance testing for frequencies up to 6GHz with precision of better 30%.
Manufacture	:	Schmid & Partner Engineering AG

EX3DV4 E-field Probe

c)Data Acquisition Electronic (DAE4)

Features	:	Signal amplifier, multiplexer, A/D converter and control logic Serial optical link for communication with DASY5 embedded system (fully remote controlled) Two step probe touch detector for mechanical surface detection and emergency robot stop
Measurement Range	:	-100 to +300 mV (16 bit resolution and two range settings: 4mV, 400mV)
Input Offset voltage	:	< 5 µV (with auto zero)
Input Resistance	:	200 MΩ
Input Bias Current	:	< 50 fA
Battery Power	:	> 10 h of operation (with two 9.6 V NiMH accus)
Dimension	:	60 x 60 x 68 mm
Manufacture	:	Schmid & Partner Engineering AG

d)Electro-Optic Converter (EOC)

Version	:	EOC 61
Description	:	for TX60 robot arm, including proximity sensor
Manufacture	:	Schmid & Partner Engineering AG

e)DASY5 Measurement server

Features	:	Intel ULV Celeron 400MHz 128MB chip disk and 128MB RAM 16 Bit A/D converter for surface detection system Vacuum Fluorescent Display Robot Interface Serial link to DAE (with watchdog supervision) Door contact port (Possibility to connect a light curtain) Emergency stop port (to connect the remote control) Signal lamps port Light beam port Three Ethernet connection ports Two USB 2.0 Ports Two serial links Expansion port for future applications
Dimensions (L x W x H)	:	440 x 241 x 89 mm
Manufacture	:	Schmid & Partner Engineering AG

f) Light Beam Switches

Version	:	LB5
Dimensions (L x H)	:	110 x 80 mm
Thickness	:	12 mm
Beam-length	:	80 mm
Manufacture	:	Schmid & Partner Engineering AG

g)Software

Item	:	Dosimetric Assessment System DASY5
Type No.	:	SD 000 401A, SD 000 402A
Software version No.	:	DASY52, Version 52.6 (1)
Manufacture / Origin	:	Schmid & Partner Engineering AG

h)Robot Control Unit

Weight	:	70 Kg
AC Input Voltage	:	selectable
Manufacturer	:	Stäubli Robotics

i)Phantom and Device Holder

Phantom

Type	:	SAM Twin Phantom V4.0
Description	:	The shell corresponds to the specifications of the Specific Anthropomorphic Mannequin (SAM) phantom defined in IEEE 1528 and IEC 62209-1. It enables the dosimetric evaluation of left and right hand phone usage as well as body mounted usage at the flat phantom region. A cover prevents evaporation of the liquid. Reference markings on the phantom allow the complete setup of all predefined phantom positions and measurement grids by teaching three points with the robot.
Material	:	Vinylester, glass fiber reinforced (VE-GF)
Shell Material	:	Fiberglass
Thickness	:	2.0 +/-0.2 mm
Dimensions	:	Length: 1000 mm Width: 500 mm Height: adjustable feet
Volume	:	Approx. 25 liters
Manufacture	:	Schmid & Partner Engineering AG

Type	:	2mm Flat phantom ELI4.0 or 5
Description	:	Phantom for compliance testing of handheld and body-mounted wireless devices in the frequency range of 30 MHz to 6 GHz. ELI4 is fully compatible with the latest draft of the standard IEC 62209 Part II and all known tissue simulating liquids. ELI4 has been optimized regarding its performance and can be integrated into our standard phantom tables. A cover prevents evaporation of the liquid. Reference markings on the phantom allow installation of the complete setup, including all predefined phantom positions and measurement grids, by teaching three points. The phantom is supported by software version DASY4.5 and higher and is compatible with all SPEAG dosimetric probes and dipoles.
Material	:	Vinylester, glass fiber reinforced (VE-GF)
Shell Thickness	:	2.0 ± 0.2 mm (sagging: <1%)
Filling Volume	:	approx. 30 liters
Dimensions	:	Major ellipse axis: 600 mm Minor axis: 400 mm
Manufacture	:	Schmid & Partner Engineering AG

Device Holder

In combination with the Twin SAM Phantom V4.0/V4.0c or ELI4, the Mounting Device enables the rotation of the mounted transmitter device in spherical coordinates. Rotation point is the ear opening point. Transmitter devices can be easily and accurately positioned according to IEC, IEEE, FCC or other specifications. The device holder can be locked for positioning at different phantom sections (left head, right head, flat).

Material : POM

Laptio Extensions kit

Simple but effective and easy-to-use extension for Mounting Device that facilitates the testing of larger devices according to IEC 62209-2 (e.g., laptops, cameras, etc.). It is lightweight and fits easily on the upper part of the Mounting Device in place of the phone positioner. The extension is fully compatible with the Twin-SAM, ELI4 Phantoms.

Material : POM, Acrylic glass, Foam

Urethane

For this measurement, the urethane foam was used as device holder.

j)Simulated Tissues (Liquid)

The following tissue formulations are provided for reference only as some of the parameters have not been thoroughly verified. The composition of ingredients may be modified accordingly to achieve the desired target tissue parameters required for required for routine SAR evaluation.

Product identifier

Trade name	Broad Band Tissue Simulation Liquid HBBL600-10000V6, MBBL600-6000V6, HU16B, MU16B
Manufacturer/Supplier	Schmid & Partner Engineering AG

Declarable components:

CAS: 107-21-1 EINECS: 203-473-3 Reg.nr.: 01-2119456816-28-0000	**Ethanediol** STOT RE 2, H373; Acute Tox. 4, H302	< 5.2%
CAS: 68608-26-4 EINECS: 271-781-5 Reg.nr.: 01-2119527859-22-0000	**Sodium petroleum sulfonate** Eye Irrit. 2, H319	< 2.9%
CAS: 107-41-5 EINECS: 203-489-0 Reg.nr.: 01-2119539582-35-0000	**Hexylene Glycol / 2-Methyl-pentane-2,4-diol** Skin Irrit. 2, H315; Eye Irrit. 2, H319	< 2.9%
CAS: 68920-66-1 NLP: 500-236-9 Reg.nr.: 01-2119489407-26-0000	**Alkoxylated alcohol, > C_{16}** Aquatic Chronic 2, H411; Skin Irrit. 2, H315; Eye Irrit. 2, H319	< 2.0%

System Check Dipole SAR Calibration Certificate -Dipole 2450MHz(D2450V2,S/N:713)

Calibration Laboratory of
Schmid & Partner
Engineering AG
Zeughausstrasse 43, 8004 Zurich, Switzerland

S Schweizerischer Kalibrierdienst
C Service suisse d'étalonnage
Servizio svizzero di taratura
S Swiss Calibration Service

Accredited by the Swiss Accreditation Service (SAS)
The Swiss Accreditation Service is one of the signatories to the EA Multilateral Agreement for the recognition of calibration certificates

Accreditation No.: SCS 0108

Client UL Japan (Vitec) **Certificate No: D2450V2-713_Sep16**

CALIBRATION CERTIFICATE

Object	D2450V2 - SN:713
Calibration procedure(s)	QA CAL-05.v9 Calibration procedure for dipole validation kits above 700 MHz
Calibration date:	September 13, 2016

This calibration certificate documents the traceability to national standards, which realize the physical units of measurements (SI).
The measurements and the uncertainties with confidence probability are given on the following pages and are part of the certificate.

All calibrations have been conducted in the closed laboratory facility: environment temperature (22 ± 3)°C and humidity < 70%.

Calibration Equipment used (M&TE critical for calibration)

Primary Standards	ID #	Cal Date (Certificate No.)	Scheduled Calibration
Power meter NRP	SN: 104778	06-Apr-16 (No. 217-02288/02289)	Apr-17
Power sensor NRP-Z91	SN: 103244	06-Apr-16 (No. 217-02288)	Apr-17
Power sensor NRP-Z91	SN: 103245	06-Apr-16 (No. 217-02289)	Apr-17
Reference 20 dB Attenuator	SN: 5058 (20k)	05-Apr-16 (No. 217-02292)	Apr-17
Type-N mismatch combination	SN: 5047.2 / 06327	05-Apr-16 (No. 217-02295)	Apr-17
Reference Probe EX3DV4	SN: 7349	15-Jun-16 (No. EX3-7349_Jun16)	Jun-17
DAE4	SN: 601	30-Dec-15 (No. DAE4-601_Dec15)	Dec-16

Secondary Standards	ID #	Check Date (in house)	Scheduled Check
Power meter EPM-442A	SN: GB37480704	07-Oct-15 (No. 217-02222)	In house check: Oct-16
Power sensor HP 8481A	SN: US37292783	07-Oct-15 (No. 217-02222)	In house check: Oct-16
Power sensor HP 8481A	SN: MY41092317	07-Oct-15 (No. 217-02223)	In house check: Oct-16
RF generator R&S SMT-06	SN: 100972	15-Jun-15 (in house check Jun-15)	In house check: Oct-16
Network Analyzer HP 8753E	SN: US37390585	18-Oct-01 (in house check Oct-15)	In house check: Oct-16

	Name	Function	Signature
Calibrated by:	Jeton Kastrati	Laboratory Technician	
Approved by:	Katja Pokovic	Technical Manager	

Issued: September 13, 2016

This calibration certificate shall not be reproduced except in full without written approval of the laboratory.

Calibration Laboratory of
Schmid & Partner
Engineering AG
Zeughausstrasse 43, 8004 Zurich, Switzerland

S Schweizerischer Kalibrierdienst
C Service suisse d'étalonnage
Servizio svizzero di taratura
S Swiss Calibration Service

Accredited by the Swiss Accreditation Service (SAS)
The Swiss Accreditation Service is one of the signatories to the EA Multilateral Agreement for the recognition of calibration certificates

Accreditation No.: SCS 0108

Glossary:

TSL	tissue simulating liquid
ConvF	sensitivity in TSL / NORM x,y,z
N/A	not applicable or not measured

Calibration is Performed According to the Following Standards:

a) IEEE Std 1528-2013, "IEEE Recommended Practice for Determining the Peak Spatial-Averaged Specific Absorption Rate (SAR) in the Human Head from Wireless Communications Devices: Measurement Techniques", June 2013
b) IEC 62209-1, "Procedure to measure the Specific Absorption Rate (SAR) for hand-held devices used in close proximity to the ear (frequency range of 300 MHz to 3 GHz)", February 2005
c) IEC 62209-2, "Procedure to determine the Specific Absorption Rate (SAR) for wireless communication devices used in close proximity to the human body (frequency range of 30 MHz to 6 GHz)", March 2010
d) KDB 865664, "SAR Measurement Requirements for 100 MHz to 6 GHz"

Additional Documentation:

e) DASY4/5 System Handbook

Methods Applied and Interpretation of Parameters:

- *Measurement Conditions:* Further details are available from the Validation Report at the end of the certificate. All figures stated in the certificate are valid at the frequency indicated.
- *Antenna Parameters with TSL:* The dipole is mounted with the spacer to position its feed point exactly below the center marking of the flat phantom section, with the arms oriented parallel to the body axis.
- *Feed Point Impedance and Return Loss:* These parameters are measured with the dipole positioned under the liquid filled phantom. The impedance stated is transformed from the measurement at the SMA connector to the feed point. The Return Loss ensures low reflected power. No uncertainty required.
- *Electrical Delay:* One-way delay between the SMA connector and the antenna feed point. No uncertainty required.
- *SAR measured:* SAR measured at the stated antenna input power.
- *SAR normalized:* SAR as measured, normalized to an input power of 1 W at the antenna connector.
- *SAR for nominal TSL parameters:* The measured TSL parameters are used to calculate the nominal SAR result.

The reported uncertainty of measurement is stated as the standard uncertainty of measurement multiplied by the coverage factor k=2, which for a normal distribution corresponds to a coverage probability of approximately 95%.

Measurement Conditions

DASY system configuration, as far as not given on page 1.

DASY Version	DASY5	V52.8.8
Extrapolation	Advanced Extrapolation	
Phantom	Modular Flat Phantom	
Distance Dipole Center - TSL	10 mm	with Spacer
Zoom Scan Resolution	dx, dy, dz = 5 mm	
Frequency	2450 MHz ± 1 MHz	

Head TSL parameters

The following parameters and calculations were applied.

	Temperature	**Permittivity**	**Conductivity**
Nominal Head TSL parameters	22.0 °C	39.2	1.80 mho/m
Measured Head TSL parameters	(22.0 ± 0.2) °C	37.9 ± 6 %	1.88 mho/m ± 6 %
Head TSL temperature change during test	< 0.5 °C	----	----

SAR result with Head TSL

SAR averaged over 1 cm^3 (1 g) of Head TSL	Condition	
SAR measured	250 mW input power	13.4 W/kg
SAR for nominal Head TSL parameters	normalized to 1W	**52.1 W/kg ± 17.0 % (k=2)**

SAR averaged over 10 cm^3 (10 g) of Head TSL	condition	
SAR measured	250 mW input power	6.23 W/kg
SAR for nominal Head TSL parameters	normalized to 1W	**24.5 W/kg ± 16.5 % (k=2)**

Body TSL parameters

The following parameters and calculations were applied.

	Temperature	**Permittivity**	**Conductivity**
Nominal Body TSL parameters	22.0 °C	52.7	1.95 mho/m
Measured Body TSL parameters	(22.0 ± 0.2) °C	51.6 ± 6 %	2.04 mho/m ± 6 %
Body TSL temperature change during test	< 0.5 °C	----	----

SAR result with Body TSL

SAR averaged over 1 cm^3 (1 g) of Body TSL	Condition	
SAR measured	250 mW input power	13.0 W/kg
SAR for nominal Body TSL parameters	normalized to 1W	**50.7 W/kg ± 17.0 % (k=2)**

SAR averaged over 10 cm^3 (10 g) of Body TSL	condition	
SAR measured	250 mW input power	6.11 W/kg
SAR for nominal Body TSL parameters	normalized to 1W	**24.1 W/kg ± 16.5 % (k=2)**

Appendix (Additional assessments outside the scope of SCS 0108)

Antenna Parameters with Head TSL

Impedance, transformed to feed point	53.0 Ω + 2.3 jΩ
Return Loss	- 28.8 dB

Antenna Parameters with Body TSL

Impedance, transformed to feed point	49.6 Ω + 3.7 jΩ
Return Loss	- 28.5 dB

General Antenna Parameters and Design

Electrical Delay (one direction)	1.158 ns

After long term use with 100W radiated power, only a slight warming of the dipole near the feedpoint can be measured.

The dipole is made of standard semirigid coaxial cable. The center conductor of the feeding line is directly connected to the second arm of the dipole. The antenna is therefore short-circuited for DC-signals. On some of the dipoles, small end caps are added to the dipole arms in order to improve matching when loaded according to the position as explained in the "Measurement Conditions" paragraph. The SAR data are not affected by this change. The overall dipole length is still according to the Standard.
No excessive force must be applied to the dipole arms, because they might bend or the soldered connections near the feedpoint may be damaged.

Additional EUT Data

Manufactured by	SPEAG
Manufactured on	July 05, 2002

DASY5 Validation Report for Head TSL

Date: 13.09.2016

Test Laboratory: SPEAG, Zurich, Switzerland

DUT: Dipole 2450 MHz; Type: D2450V2; Serial: D2450V2 - SN:713

Communication System: UID 0 - CW; Frequency: 2450 MHz
Medium parameters used: f = 2450 MHz; σ = 1.88 S/m; ε_r = 37.9; ρ = 1000 kg/m^3
Phantom section: Flat Section
Measurement Standard: DASY5 (IEEE/IEC/ANSI C63.19-2011)

DASY52 Configuration:

- Probe: EX3DV4 - SN7349; ConvF(7.72, 7.72, 7.72); Calibrated: 15.06.2016;
- Sensor-Surface: 1.4mm (Mechanical Surface Detection)
- Electronics: DAE4 Sn601; Calibrated: 30.12.2015
- Phantom: Flat Phantom 5.0 (front); Type: QD000P50AA; Serial: 1001
- DASY52 52.8.8(1258); SEMCAD X 14.6.10(7372)

Dipole Calibration for Head Tissue/Pin=250 mW, d=10mm/Zoom Scan (7x7x7)/Cube 0:
Measurement grid: dx=5mm, dy=5mm, dz=5mm
Reference Value = 113.5 V/m; Power Drift = -0.01 dB
Peak SAR (extrapolated) = 26.7 W/kg
SAR(1 g) = 13.4 W/kg; SAR(10 g) = 6.23 W/kg
Maximum value of SAR (measured) = 21.9 W/kg

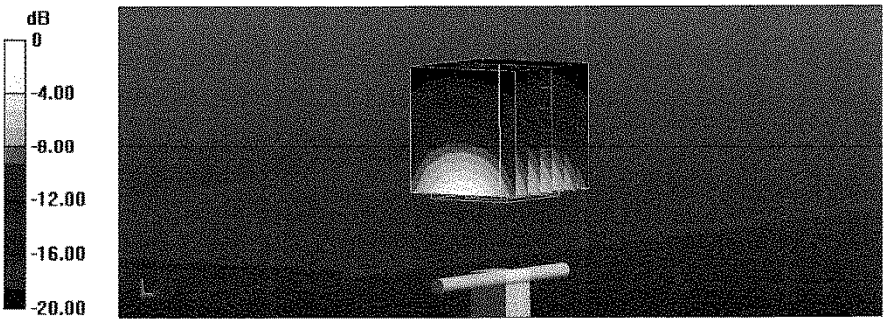

0 dB = 21.9 W/kg = 13.40 dBW/kg

Impedance Measurement Plot for Head TSL

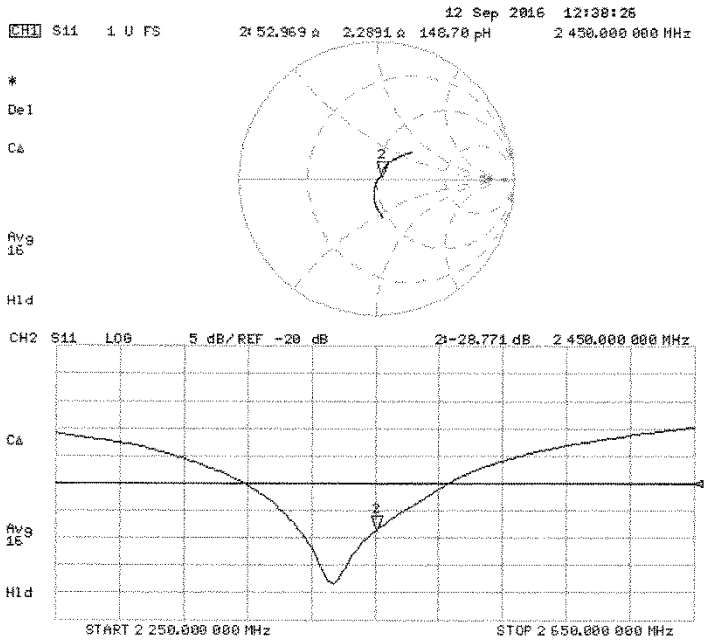

DASY5 Validation Report for Body TSL

Date: 13.09.2016

Test Laboratory: SPEAG, Zurich, Switzerland

DUT: Dipole 2450 MHz; Type: D2450V2; Serial: D2450V2 - SN:713

Communication System: UID 0 - CW; Frequency: 2450 MHz
Medium parameters used: f = 2450 MHz; σ = 2.04 S/m; ε_r = 51.6; ρ = 1000 kg/m^3
Phantom section: Flat Section
Measurement Standard: DASY5 (IEEE/IEC/ANSI C63.19-2011)

DASY52 Configuration:

- Probe: EX3DV4 - SN7349; ConvF(7.79, 7.79, 7.79); Calibrated: 15.06.2016;
- Sensor-Surface: 1.4mm (Mechanical Surface Detection)
- Electronics: DAE4 Sn601; Calibrated: 30.12.2015
- Phantom: Flat Phantom 5.0 (back); Type: QD000P50AA; Serial: 1002
- DASY52 52.8.8(1258); SEMCAD X 14.6.10(7372)

Dipole Calibration for Body Tissue/Pin=250 mW, d=10mm/Zoom Scan (7x7x7)/Cube 0:
Measurement grid: dx=5mm, dy=5mm, dz=5mm
Reference Value = 106.4 V/m; Power Drift = -0.03 dB
Peak SAR (extrapolated) = 25.5 W/kg
SAR(1 g) = 13 W/kg; SAR(10 g) = 6.11 W/kg
Maximum value of SAR (measured) = 21.2 W/kg

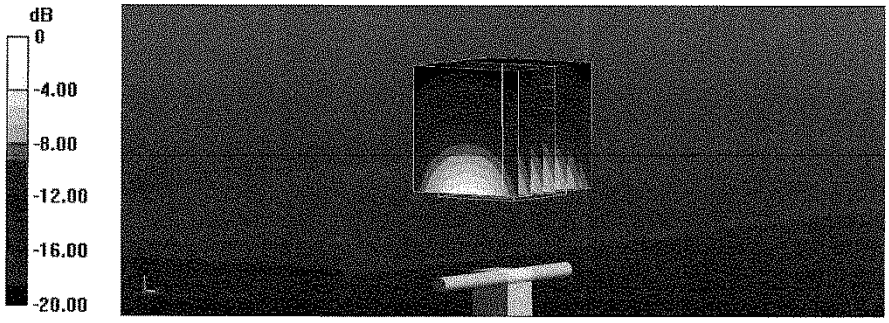

0 dB = 21.2 W/kg = 13.26 dBW/kg

Impedance Measurement Plot for Body TSL

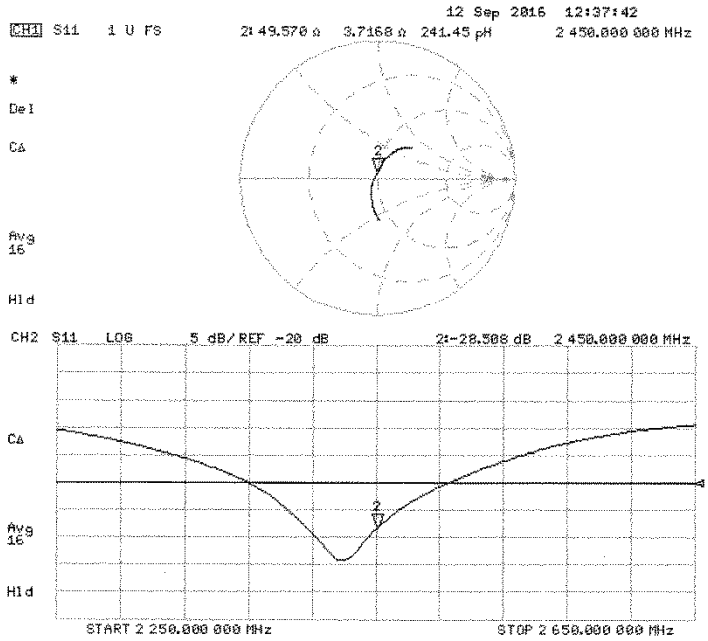

D2450V2 Calibration for Impedance and Return-loss

Equipment	Dipole Antenna	Model	D2450V2
Manufacture	Schmid&Partner Engineering AG	Serial	713
Tested by	Tomohisa Nakagawa		

1. Test environment

Date	September 12, 2017		
Ambient Temperature	23.0 deg.C	Relative humidity	64%RH
Date	September 20, 2018		
Ambient Temperature	24.0 deg.C	Relative humidity	57%RH

2. Equipment used

Calibration at September, 2017

Control No.	Instrument	Manufacturer	Model No	Serial No	Test Item	Calibration Date * Interval(month)
MOS-37	Digital thermometer	LKM electronic	DTM3000	-	SAR	2017/07/26 * 12
MPF-03	2mm Oval Flat Phantom	Schmid&Partner Engineering AG	QDOVA001BB	1203	SAR	2017/05/29 * 12
MMSL2450	Tissue simulation liquid (Body)	Schmid&Partner Engineering AG	MSL2450V2	SL AA 245 BA	SAR*Daily Check Target Value ±5%	Pre Check
MHSL2450	Tissue simulation liquid (Head)	Schmid&Partner Engineering AG	HSL2450V2	SL AAH 245 BA	SAR*Daily Check Target Value ±5%	Pre Check
EST-63	Network Analyzer	KEYSIGHT	E5071C	MY46523746	SAR	2017/02/03 * 12
EST-64	Calibration Kit	KEYSIGHT	85032F	MY53200995	SAR	2017/02/02 * 12
MDA-07	Dipole Antenna	Schmid&Partner Engineering AG	D2450V2	713	SAR	2016/09/13 * 12

Calibration at September, 2018

Control No.	Instrument	Manufacturer	Model No	Serial No	Test Item	Calibration Date * Interval(month)
MOS-37	Digital thermometer	LKM electronic	DTM3000	-	SAR	2018/07/30 * 12
MPF-03	2mm Oval Flat Phantom	Schmid&Partner Engineering AG	QDOVA001BB	1203	SAR	2018/05/08 * 12
MMSL2450	Tissue simulation liquid (Body)	Schmid&Partner Engineering AG	MSL2450V2	SL AA 245 BA	SAR*Daily Check Target Value ±5%	Pre Check
MHSL2450	Tissue simulation liquid (Head)	Schmid&Partner Engineering AG	HSL2450V2	SL AAH 245 BA	SAR*Daily Check Target Value ±5%	Pre Check
EST-30	Network Analyzer	Agilent	N5230A	MY46400314	SAR	2018/08/16 * 12
EST-57	2.4mm Calibration Kit	Agilent	85056A	MY44300225	SAR	2018/08/17 * 12
MDA-07	Dipole Antenna	Schmid&Partner Engineering AG	D2450V2	713	SAR	2016/09/13 * 24

3. Test Result

Impeadance,Transformed to feed point	cal day	Head (real part) [Ω]	Head (img part) [jΩ]	Deviation (real part) [Ω]	Deviation (img part) [jΩ]	Tolerance	Result
Calibration (SPEAG)	2016/9/13	53.00	2.30	-	-	-	-
Calibration(ULJ)	2017/9/12	52.38	3.79	-0.62	1.49	+/-5Ω+/-5jΩ	Complied
Calibration(ULJ)	2018/9/20	50.04	4.78	-2.34	0.99	+/-5Ω+/-5jΩ	Complied

Return loss	cal day	Head [dB]	Deviation [dB]	Tolerance [+/-dB]	Result
Calibration (SPEAG)	2016/9/13	-28.80	-	-	-
Calibration(ULJ)	2017/9/12	-25.08	3.72	5.76	Complied
Calibration(ULJ)	2018/9/20	-26.43	-1.35	5.02	Complied

Impeadance,Transformed to feed point	cal day	Body (real part) [Ω]	Body (img part) [jΩ]	Deviation (real part) [Ω]	Deviation (img part) [jΩ]	Tolerance	Result
Calibration (SPEAG)	2016/9/13	49.60	3.70	-	-	-	-
Calibration(ULJ)	2017/9/12	46.48	7.69	-3.12	3.99	+/-5Ω+/-5jΩ	Complied
Calibration(ULJ)	2018/9/20	48.69	5.98	2.21	-1.71	+/-5Ω+/-5jΩ	Complied

Return loss	cal day	Body [dB]	Deviation [dB]	Tolerance [+/-dB]	Result
Calibration (SPEAG)	2016/9/13	-28.50	-	-	-
Calibration(ULJ)	2017/9/12	-23.31	5.19	5.70	Complied
Calibration(ULJ)	2018/9/20	-24.16	-0.85	4.66	Complied

*Tolerance : According to the KDB865664D01

Measurement Plots

<Head Liquid> 2017

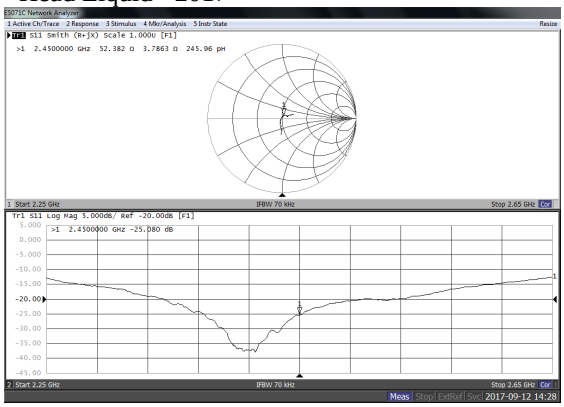

<Head Liquid> 2018

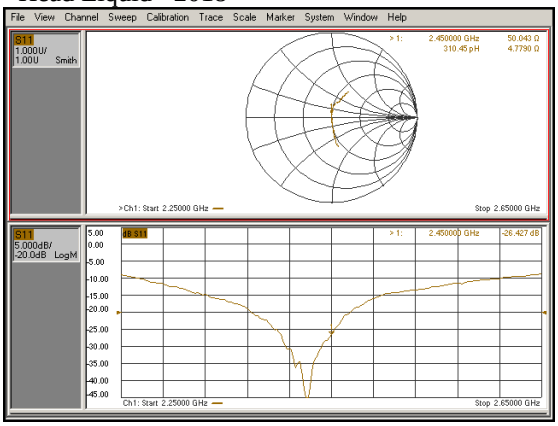

<Body Liquid> 2017

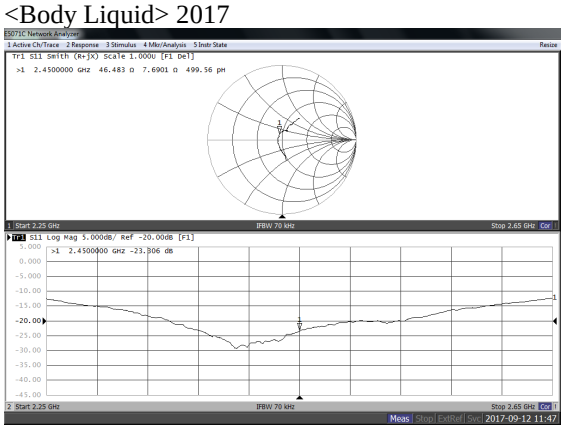

<Body Liquid> 2018

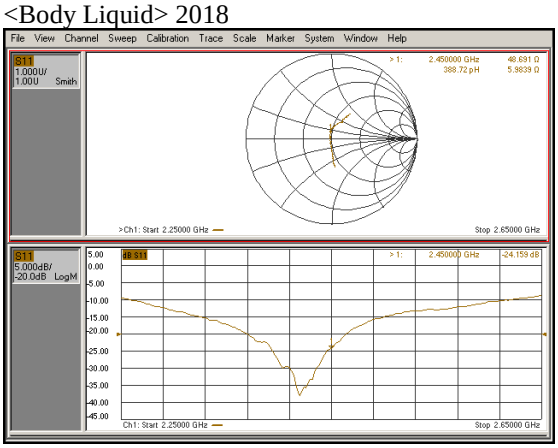

Dosimetric E-Field Probe Calibration Certificate (EX3DV4, S/N: 3917)

Calibration Laboratory of
Schmid & Partner
Engineering AG
Zeughausstrasse 43, 8004 Zurich, Switzerland

S C S Schweizerischer Kalibrierdienst
Service suisse d'étalonnage
Servizio svizzero di taratura
Swiss Calibration Service

Accredited by the Swiss Accreditation Service (SAS)
The Swiss Accreditation Service is one of the signatories to the EA Multilateral Agreement for the recognition of calibration certificates

Accreditation No.: SCS 0108

Client **UL Japan (KYCOM)**

Certificate No: EX3-3917_May19

CALIBRATION CERTIFICATE

Object	EX3DV4 - SN:3917
Calibration procedure(s)	QA CAL-01.v9, QA CAL-12.v9, QA CAL-14.v5, QA CAL-23.v5, QA CAL-25.v7 Calibration procedure for dosimetric E-field probes
Calibration date:	May 15, 2019

This calibration certificate documents the traceability to national standards, which realize the physical units of measurements (SI).
The measurements and the uncertainties with confidence probability are given on the following pages and are part of the certificate.

All calibrations have been conducted in the closed laboratory facility: environment temperature (22 ± 3)°C and humidity < 70%.

Calibration Equipment used (M&TE critical for calibration)

Primary Standards	ID	Cal Date (Certificate No.)	Scheduled Calibration
Power meter NRP	SN: 104778	03-Apr-19 (No. 217-02892/02893)	Apr-20
Power sensor NRP-Z91	SN: 103244	03-Apr-19 (No. 217-02892)	Apr-20
Power sensor NRP-Z91	SN: 103245	03-Apr-19 (No. 217-02893)	Apr-20
Reference 20 dB Attenuator	SN: S5277 (20x)	04-Apr-19 (No. 217-02894)	Apr-20
DAE4	SN: 660	19-Dec-18 (No. DAE4-660_Dec18)	Dec-19
Reference Probe ES3DV2	SN: 3013	31-Dec-18 (No. ES3-3013_Dec18)	Dec-19
Secondary Standards	ID	Check Date (in house)	Scheduled Check
Power meter E4419B	SN: GB41293874	06-Apr-16 (in house check Jun-18)	In house check: Jun-20
Power sensor E4412A	SN: MY41498087	06-Apr-16 (in house check Jun-18)	In house check: Jun-20
Power sensor E4412A	SN: 000110210	06-Apr-16 (in house check Jun-18)	In house check: Jun-20
RF generator HP 8648C	SN: US3642U01700	04-Aug-99 (in house check Jun-18)	In house check: Jun-20
Network Analyzer E8358A	SN: US41080477	31-Mar-14 (in house check Oct-18)	In house check: Oct-19

	Name	Function	Signature
Calibrated by:	Jeton Kastrati	Laboratory Technician	
Approved by:	Katja Pokovic	Technical Manager	

Issued: May 16, 2019

This calibration certificate shall not be reproduced except in full without written approval of the laboratory.

Calibration Laboratory of
Schmid & Partner
Engineering AG
Zeughausstrasse 43, 8004 Zurich, Switzerland

S Schweizerischer Kalibrierdienst
C Service suisse d'étalonnage
Servizio svizzero di taratura
S Swiss Calibration Service

Accredited by the Swiss Accreditation Service (SAS)
The Swiss Accreditation Service is one of the signatories to the EA Multilateral Agreement for the recognition of calibration certificates

Accreditation No.: SCS 0108

Glossary:

TSL	tissue simulating liquid
NORMx,y,z	sensitivity in free space
ConvF	sensitivity in TSL / NORMx,y,z
DCP	diode compression point
CF	crest factor (1/duty_cycle) of the RF signal
A, B, C, D	modulation dependent linearization parameters
Polarization φ	φ rotation around probe axis
Polarization ϑ	ϑ rotation around an axis that is in the plane normal to probe axis (at measurement center), i.e., ϑ = 0 is normal to probe axis
Connector Angle	information used in DASY system to align probe sensor X to the robot coordinate system

Calibration is Performed According to the Following Standards:

a) IEEE Std 1528-2013, "IEEE Recommended Practice for Determining the Peak Spatial-Averaged Specific Absorption Rate (SAR) in the Human Head from Wireless Communications Devices: Measurement Techniques", June 2013
b) IEC 62209-1, ", "Measurement procedure for the assessment of Specific Absorption Rate (SAR) from hand-held and body-mounted devices used next to the ear (frequency range of 300 MHz to 6 GHz)", July 2016
c) IEC 62209-2, "Procedure to determine the Specific Absorption Rate (SAR) for wireless communication devices used in close proximity to the human body (frequency range of 30 MHz to 6 GHz)", March 2010
d) KDB 865664, "SAR Measurement Requirements for 100 MHz to 6 GHz"

Methods Applied and Interpretation of Parameters:

- *NORMx,y,z:* Assessed for E-field polarization ϑ = 0 (f ≤ 900 MHz in TEM-cell; f > 1800 MHz: R22 waveguide). NORMx,y,z are only intermediate values, i.e., the uncertainties of NORMx,y,z does not affect the E^2-field uncertainty inside TSL (see below *ConvF*).
- *NORM(f)x,y,z = NORMx,y,z * frequency_response* (see Frequency Response Chart). This linearization is implemented in DASY4 software versions later than 4.2. The uncertainty of the frequency response is included in the stated uncertainty of *ConvF*.
- *DCPx,y,z:* DCP are numerical linearization parameters assessed based on the data of power sweep with CW signal (no uncertainty required). DCP does not depend on frequency nor media.
- *PAR:* PAR is the Peak to Average Ratio that is not calibrated but determined based on the signal characteristics
- *Ax,y,z; Bx,y,z; Cx,y,z; Dx,y,z; VRx,y,z: A, B, C, D* are numerical linearization parameters assessed based on the data of power sweep for specific modulation signal. The parameters do not depend on frequency nor media. *VR* is the maximum calibration range expressed in RMS voltage across the diode.
- *ConvF and Boundary Effect Parameters:* Assessed in flat phantom using E-field (or Temperature Transfer Standard for f ≤ 800 MHz) and inside waveguide using analytical field distributions based on power measurements for f > 800 MHz. The same setups are used for assessment of the parameters applied for boundary compensation (alpha, depth) of which typical uncertainty values are given. These parameters are used in DASY4 software to improve probe accuracy close to the boundary. The sensitivity in TSL corresponds to *NORMx,y,z * ConvF* whereby the uncertainty corresponds to that given for *ConvF*. A frequency dependent *ConvF* is used in DASY version 4.4 and higher which allows extending the validity from ± 50 MHz to ± 100 MHz.
- *Spherical isotropy (3D deviation from isotropy)*: in a field of low gradients realized using a flat phantom exposed by a patch antenna.
- *Sensor Offset*: The sensor offset corresponds to the offset of virtual measurement center from the probe tip (on probe axis). No tolerance required.
- *Connector Angle*: The angle is assessed using the information gained by determining the *NORMx* (no uncertainty required).

DASY/EASY - Parameters of Probe: EX3DV4 - SN:3917

Basic Calibration Parameters

	Sensor X	Sensor Y	Sensor Z	Unc (k=2)
Norm ($\mu V/(V/m)^2$)[A]	0.52	0.41	0.44	± 10.1 %
DCP (mV)[B]	100.1	105.3	102.7	

Calibration Results for Modulation Response

UID	Communication System Name		A dB	B dB√µV	C	D dB	VR mV	Max dev.	Max Unc[E] (k=2)
0	CW	X	0.00	0.00	1.00	0.00	194.2	± 3.3 %	± 4.7 %
		Y	0.00	0.00	1.00		199.3		
		Z	0.00	0.00	1.00		177.5		
10352-AAA	Pulse Waveform (200Hz, 10%)	X	15.00	89.01	21.36	10.00	60.0	± 2.7 %	± 9.6 %
		Y	15.00	87.77	20.46		60.0		
		Z	15.00	86.96	20.14		60.0		
10353-AAA	Pulse Waveform (200Hz, 20%)	X	15.00	89.54	20.27	6.99	80.0	± 1.5 %	± 9.6 %
		Y	15.00	88.32	19.46		80.0		
		Z	15.00	87.28	18.88		80.0		
10354-AAA	Pulse Waveform (200Hz, 40%)	X	15.00	91.63	19.64	3.98	95.0	± 1.0 %	± 9.6 %
		Y	15.00	91.90	19.75		95.0		
		Z	15.00	87.41	17.23		95.0		
10355-AAA	Pulse Waveform (200Hz, 60%)	X	15.00	91.63	18.04	2.22	120.0	± 1.2 %	± 9.6 %
		Y	15.00	97.45	21.00		120.0		
		Z	15.00	85.48	14.79		120.0		
10387-AAA	QPSK Waveform, 1 MHz	X	0.55	60.00	7.36	0.00	150.0	± 2.9 %	± 9.6 %
		Y	0.76	63.47	10.12		150.0		
		Z	0.54	60.05	7.21		150.0		
10388-AAA	QPSK Waveform, 10 MHz	X	2.04	67.03	15.06	0.00	150.0	± 1.2 %	± 9.6 %
		Y	2.41	70.08	16.84		150.0		
		Z	2.09	67.56	15.27		150.0		
10396-AAA	64-QAM Waveform, 100 kHz	X	2.78	68.63	17.79	3.01	150.0	± 0.6 %	± 9.6 %
		Y	3.59	74.41	20.38		150.0		
		Z	2.90	69.48	18.09		150.0		
10399-AAA	64-QAM Waveform, 40 MHz	X	3.39	66.69	15.48	0.00	150.0	± 2.1 %	± 9.6 %
		Y	3.58	67.96	16.24		150.0		
		Z	3.43	67.02	15.62		150.0		
10414-AAA	WLAN CCDF, 64-QAM, 40MHz	X	4.77	65.43	15.41	0.00	150.0	± 4.1 %	± 9.6 %
		Y	4.87	66.08	15.77		150.0		
		Z	4.80	65.67	15.52		150.0		

Note: For details on UID parameters see Appendix

The reported uncertainty of measurement is stated as the standard uncertainty of measurement multiplied by the coverage factor k=2, which for a normal distribution corresponds to a coverage probability of approximately 95%.

[A] The uncertainties of Norm X,Y,Z do not affect the E^2-field uncertainty inside TSL (see Pages 5 and 6).
[B] Numerical linearization parameter: uncertainty not required.
[E] Uncertainty is determined using the max. deviation from linear response applying rectangular distribution and is expressed for the square of the field value.

DASY/EASY - Parameters of Probe: EX3DV4 - SN:3917

Sensor Model Parameters

	C1 fF	C2 fF	α V^{-1}	T1 $ms.V^{-2}$	T2 $ms.V^{-1}$	T3 ms	T4 V^{-2}	T5 V^{-1}	T6
X	43.3	328.83	36.58	16.76	0.81	5.10	0.00	0.57	1.01
Y	43.6	316.30	33.92	16.29	0.74	5.05	1.78	0.20	1.01
Z	43.5	328.65	36.27	15.77	0.95	5.07	0.12	0.57	1.01

Other Probe Parameters

Sensor Arrangement	Triangular
Connector Angle (°)	67.5
Mechanical Surface Detection Mode	enabled
Optical Surface Detection Mode	disabled
Probe Overall Length	337 mm
Probe Body Diameter	10 mm
Tip Length	9 mm
Tip Diameter	2.5 mm
Probe Tip to Sensor X Calibration Point	1 mm
Probe Tip to Sensor Y Calibration Point	1 mm
Probe Tip to Sensor Z Calibration Point	1 mm
Recommended Measurement Distance from Surface	1.4 mm

DASY/EASY - Parameters of Probe: EX3DV4 - SN:3917

Calibration Parameter Determined in Head Tissue Simulating Media

f (MHz) [C]	Relative Permittivity [F]	Conductivity (S/m) [F]	ConvF X	ConvF Y	ConvF Z	Alpha [G]	Depth [G] (mm)	Unc (k=2)
450	43.5	0.87	11.30	11.30	11.30	0.13	1.25	± 13.3 %
600	42.7	0.88	10.38	10.38	10.38	0.08	1.20	± 13.3 %
750	41.9	0.89	10.34	10.34	10.34	0.44	0.80	± 12.0 %
835	41.5	0.90	9.89	9.89	9.89	0.51	0.80	± 12.0 %
1640	40.2	1.31	8.67	8.67	8.67	0.38	0.80	± 12.0 %
1750	40.1	1.37	8.52	8.52	8.52	0.29	0.95	± 12.0 %
1900	40.0	1.40	8.17	8.17	8.17	0.31	0.80	± 12.0 %
1950	40.0	1.40	7.93	7.93	7.93	0.37	0.80	± 12.0 %
2300	39.5	1.67	7.76	7.76	7.76	0.34	0.84	± 12.0 %
2450	39.2	1.80	7.41	7.41	7.41	0.37	0.86	± 12.0 %
2600	39.0	1.96	7.20	7.20	7.20	0.40	0.90	± 12.0 %
3500	37.9	2.91	6.80	6.80	6.80	0.35	1.25	± 13.1 %

[C] Frequency validity above 300 MHz of ± 100 MHz only applies for DASY v4.4 and higher (see Page 2), else it is restricted to ± 50 MHz. The uncertainty is the RSS of the ConvF uncertainty at calibration frequency and the uncertainty for the indicated frequency band. Frequency validity below 300 MHz is ± 10, 25, 40, 50 and 70 MHz for ConvF assessments at 30, 64, 128, 150 and 220 MHz respectively. Validity of ConvF assessed at 6 MHz is 4-9 MHz, and ConvF assessed at 13 MHz is 9-19 MHz. Above 5 GHz frequency validity can be extended to ± 110 MHz.
[F] At frequencies below 3 GHz, the validity of tissue parameters (ε and σ) can be relaxed to ± 10% if liquid compensation formula is applied to measured SAR values. At frequencies above 3 GHz, the validity of tissue parameters (ε and σ) is restricted to ± 5%. The uncertainty is the RSS of the ConvF uncertainty for indicated target tissue parameters.
[G] Alpha/Depth are determined during calibration. SPEAG warrants that the remaining deviation due to the boundary effect after compensation is always less than ± 1% for frequencies below 3 GHz and below ± 2% for frequencies between 3-6 GHz at any distance larger than half the probe tip diameter from the boundary.

DASY/EASY - Parameters of Probe: EX3DV4 - SN:3917

Calibration Parameter Determined in Body Tissue Simulating Media

f (MHz) [C]	Relative Permittivity [F]	Conductivity (S/m) [F]	ConvF X	ConvF Y	ConvF Z	Alpha [G]	Depth [G] (mm)	Unc (k=2)
450	56.7	0.94	11.43	11.43	11.43	0.08	1.25	± 13.3 %
600	56.1	0.95	10.80	10.80	10.80	0.10	1.20	± 13.3 %
750	55.5	0.96	10.11	10.11	10.11	0.41	0.80	± 12.0 %
835	55.2	0.97	9.88	9.88	9.88	0.36	0.91	± 12.0 %
1640	53.7	1.42	8.62	8.62	8.62	0.36	0.80	± 12.0 %
1750	53.4	1.49	8.16	8.16	8.16	0.40	0.80	± 12.0 %
1900	53.3	1.52	7.85	7.85	7.85	0.41	0.80	± 12.0 %
2300	52.9	1.81	7.76	7.76	7.76	0.44	0.80	± 12.0 %
2450	52.7	1.95	7.59	7.59	7.59	0.40	0.87	± 12.0 %
2600	52.5	2.16	7.48	7.48	7.48	0.32	0.80	± 12.0 %
3500	51.3	3.31	6.54	6.54	6.54	0.45	1.30	± 13.1 %

[C] Frequency validity above 300 MHz of ± 100 MHz only applies for DASY v4.4 and higher (see Page 2), else it is restricted to ± 50 MHz. The uncertainty is the RSS of the ConvF uncertainty at calibration frequency and the uncertainty for the indicated frequency band. Frequency validity below 300 MHz is ± 10, 25, 40, 50 and 70 MHz for ConvF assessments at 30, 64, 128, 150 and 220 MHz respectively. Validity of ConvF assessed at 6 MHz is 4-9 MHz, and ConvF assessed at 13 MHz is 9-19 MHz. Above 5 GHz frequency validity can be extended to ± 110 MHz.
[F] At frequencies below 3 GHz, the validity of tissue parameters (ε and σ) can be relaxed to ± 10% if liquid compensation formula is applied to measured SAR values. At frequencies above 3 GHz, the validity of tissue parameters (ε and σ) is restricted to ± 5%. The uncertainty is the RSS of the ConvF uncertainty for indicated target tissue parameters.
[G] Alpha/Depth are determined during calibration. SPEAG warrants that the remaining deviation due to the boundary effect after compensation is always less than ± 1% for frequencies below 3 GHz and below ± 2% for frequencies between 3-6 GHz at any distance larger than half the probe tip diameter from the boundary.