Appendix D. Photographs

D.1. Host Platform and Antenna Placement

Figure D-1 Front View

Figure D-2 Back View

Figure D-3 Left View

Figure D-4 Right View

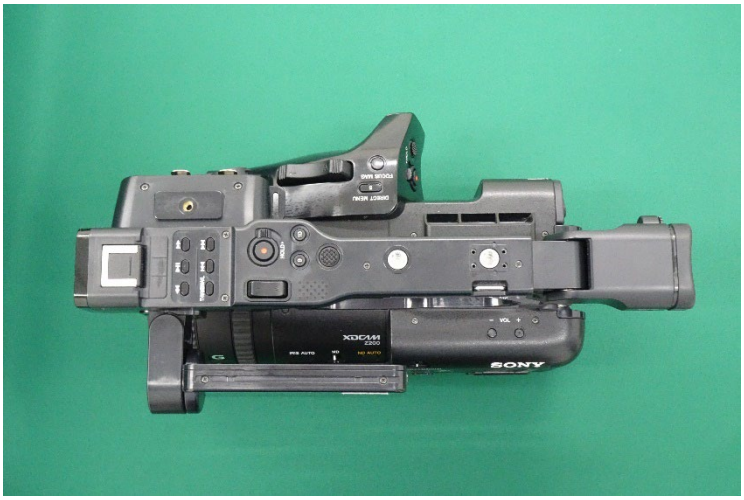

Figure D-5 Top View

Figure D-6 Bottom View

D.2. Host Platform Descriptions, Antenna Placement, RF Exposure Conditions, and SAR Test Exclusion

The following information is eligible for Short-Term Confidentiality together with internal and external photos.

Host Platform Descriptions

	Host Platform *The DUT is installed in this host.
Type of Equipment	Digital Camera
Model No.	1VY008
Test Sample Condition	☑ Prototype ☐ Pre-production ☐ Mass-production
	* Not for sale: The sample is equivalent to mass-production items. * No modification by the test lab.
Serial No.	2146
Rating	Li-ion Battery DC 14.4 V/ 2420 mAh ☐ Not user accessible.
Head/Body-Worn Accessories	n/a
Device Dimension (W x H x D)	Refer to Figure D-7
Device Category	Portable
Exposure Category	General population/ Uncontrolled environment

Antenna Placement

Antenna	Minimum Distance from Edges or Sides of Host Platform (mm)								
	Front	Back	Left	Left-Front	Left-Top	Right	Right-Top	Top	Bottom
Chain0	37.9	201.7	9.5	9.5	9.5	108.8	95.9	95.9	47.9
Chain1	149.4	74.0	92.2	92.2	92.2	10.0	7.1	76.7	89.9

* Please refer to Figure D-7 for more details.

RF Exposure Conditions

Wireless Technologies	RF Exposure Conditions	User-to-Host Distance (mm)	Test Position	Host-to-Ant. Distance (mm)		SAR Required	Note(s)
				Chain 0	Chain 1		
Wi-Fi/ Bluetooth	Body-Worn	0	Front	37.9	149.4	Yes	
			Back	201.7	74.0	Yes	
			Left	9.5	92.2	Yes	
			Left-Front	9.5	92.2	Yes	
			Left-Top	9.5	92.2	Yes	
			Right	108.8	10.0	Yes	
			Right-Top	95.9	7.1	Yes	
			Top	95.9	76.7	Yes	
			Bottom	47.9	89.9	Yes	

Body-Worn SAR (1-g SAR) Test Exclusion as per KDB 447498 D01 - Chain0

Freq. Band	Freq. (MHz)	Test Position	Host-to-Ant Distance (mm)	User-to-Ant Distance (mm)	Min. Test Sep. Distance (mm)	Max. Possible Power				Exclusion Threshold	SAR Required (> 3.0)
						Chain0 (dBm)	Chain1 (dBm)	Total (mW)	Rounded (mW)		
Wi-Fi 2.4 GHz (Chain 0)	2450	Front	37.9	37.9	38	9.5	9.5	17.8	18	0.7	No
	2450	Back	201.7	201.7	202	9.5	9.5	17.8	18	0.1	No
	2450	Left	9.5	9.5	10	9.5	9.5	17.8	18	2.8	No
	2450	Left-Front	9.5	9.5	10	9.5	9.5	17.8	18	2.8	No
	2450	Left-Top	9.5	9.5	10	9.5	9.5	17.8	18	2.8	No
	2450	Right	108.8	108.8	109	9.5	9.5	17.8	18	0.3	No
	2450	Right-Top	95.9	95.9	96	9.5	9.5	17.8	18	0.3	No
	2450	Top	95.9	95.9	96	9.5	9.5	17.8	18	0.3	No
	2450	Bottom	47.9	47.9	48	9.5	9.5	17.8	18	0.6	No
Wi-Fi 5 GHz (Chain 0)	5800	Front	37.9	37.9	38	11.5	11.5	28.3	28	1.8	No
	5800	Back	201.7	201.7	202	11.5	11.5	28.3	28	0.3	No
	5800	Left	9.5	9.5	10	11.5	11.5	28.3	28	6.7	Yes
	5800	Left-Front	9.5	9.5	10	11.5	11.5	28.3	28	6.7	Yes
	5800	Left-Top	9.5	9.5	10	11.5	11.5	28.3	28	6.7	Yes
	5800	Right	108.8	108.8	109	11.5	11.5	28.3	28	0.6	No
	5800	Right-Top	95.9	95.9	96	11.5	11.5	28.3	28	0.7	No
	5800	Top	95.9	95.9	96	11.5	11.5	28.3	28	0.7	No
	5800	Bottom	47.9	47.9	48	11.5	11.5	28.3	28	1.4	No
Bluetooth	2450	Front	37.9	37.9	38	10.1	-	10.2	10	0.4	No
	2450	Back	201.7	201.7	202	10.1	-	10.2	10	0.1	No
	2450	Left	9.5	9.5	10	10.1	-	10.2	10	1.6	No
	2450	Left-Front	9.5	9.5	10	10.1	-	10.2	10	1.6	No
	2450	Left-Top	9.5	9.5	10	10.1	-	10.2	10	1.6	No
	2450	Right	108.8	108.8	109	10.1	-	10.2	10	0.1	No
	2450	Right-Top	95.9	95.9	96	10.1	-	10.2	10	0.2	No
	2450	Top	95.9	95.9	96	10.1	-	10.2	10	0.2	No
	2450	Bottom	47.9	47.9	48	10.1	-	10.2	10	0.3	No

Note(s):
* In addition to the test positions indicated as "SAR Required: Yes" in the table above, other test positions were also measured for the simultaneous transmission analysis. Please refer 4.1 for more details.
* For Wi-Fi 2.4 GHz, the test positions of Left, Left-Front, and Left-Top were also measured conservatively because their exclusion thresholds are close to 3.0.

Body-Worn SAR (1-g SAR) Test Exclusion as per KDB 447498 D01 - Chain1

Freq. Band	Freq. (MHz)	Test Position	Host-to-Ant Distance (mm)	User-to-Ant Distance (mm)	Min. Test Sep. Distance (mm)	Max. Possible Power				Exclusion Threshold	SAR Required (> 3.0)
						Chain0 (dBm)	Chain1 (dBm)	Total (mW)	Rounded (mW)		
Wi-Fi 2.4GHz (Chain 1)	2450	Front	149.4	149.4	149	9.5	9.5	17.8	18	0.2	No
	2450	Back	74.0	74.0	74	9.5	9.5	17.8	18	0.4	No
	2450	Left	92.2	92.2	92	9.5	9.5	17.8	18	0.3	No
	2450	Left-Front	92.2	92.2	92	9.5	9.5	17.8	18	0.3	No
	2450	Left-Top	92.2	92.2	92	9.5	9.5	17.8	18	0.3	No
	2450	Right	10.0	10.0	10	9.5	9.5	17.8	18	2.8	No
	2450	Right-Top	7.1	7.1	7	9.5	9.5	17.8	18	4.0	Yes
	2450	Top	76.7	76.7	77	9.5	9.5	17.8	18	0.4	No
	2450	Bottom	89.9	89.9	90	9.5	9.5	17.8	18	0.3	No
Wi-Fi 5GHz (Chain 1)	5800	Front	149.4	149.4	149	11.5	11.5	28.3	28	0.5	No
	5800	Back	74.0	74.0	74	11.5	11.5	28.3	28	0.9	No
	5800	Left	92.2	92.2	92	11.5	11.5	28.3	28	0.7	No
	5800	Left-Front	92.2	92.2	92	11.5	11.5	28.3	28	0.7	No
	5800	Left-Top	92.2	92.2	92	11.5	11.5	28.3	28	0.7	No
	5800	Right	10.0	10.0	10	11.5	11.5	28.3	28	6.7	Yes
	5800	Right-Top	7.1	7.1	7	11.5	11.5	28.3	28	9.6	Yes
	5800	Top	76.7	76.7	77	11.5	11.5	28.3	28	0.9	No
	5800	Bottom	89.9	89.9	90	11.5	11.5	28.3	28	0.7	No

Note(s):
* In addition to the test positions indicated as "SAR Required: Yes" in the table above, other test positions were also measured for the simultaneous transmission analysis. Please refer 4.1 for more details.
* For Wi-Fi 2.4 GHz, the test position of Right was also measured conservatively because its exclusion threshold is close to 3.0.

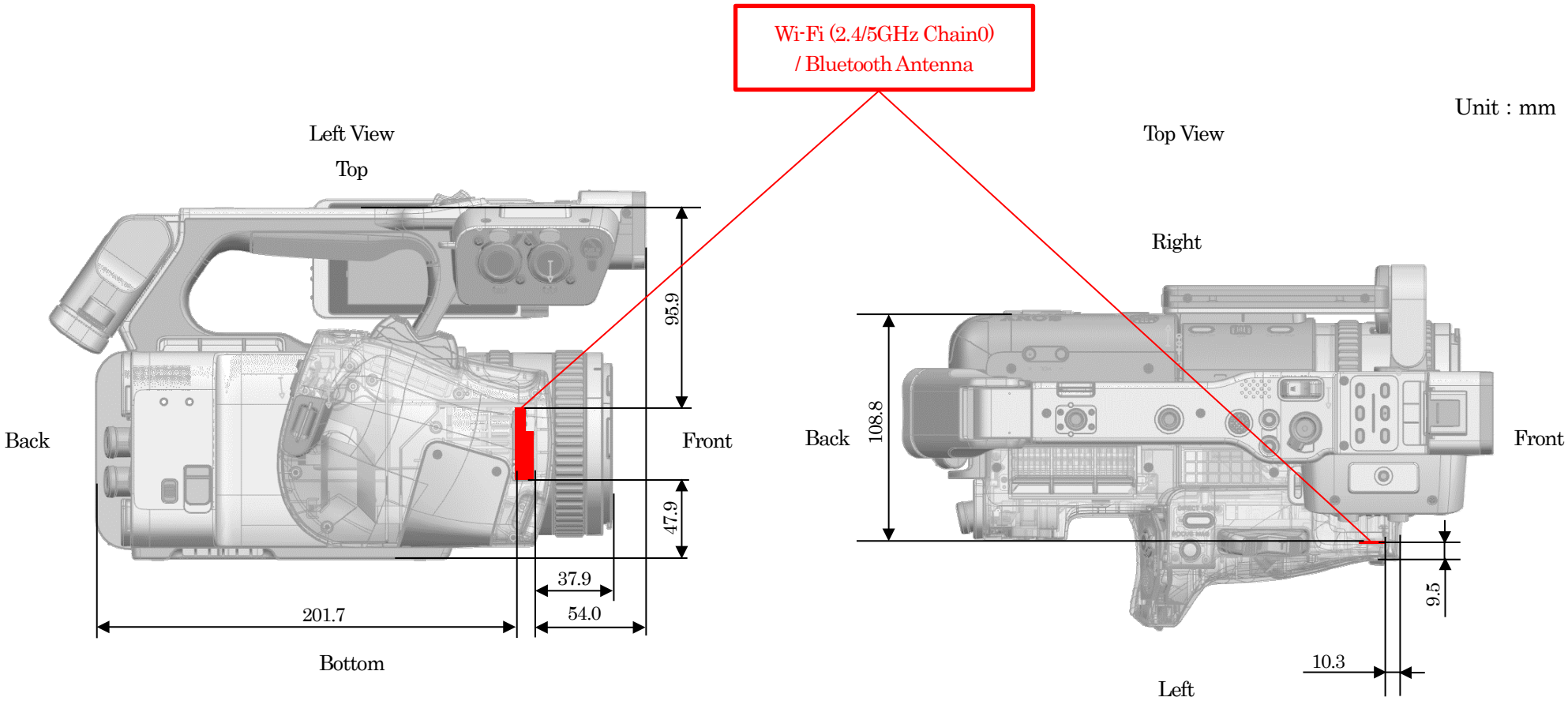

(a) Chain 0

Figure D-7 Antenna Dimensions and Separation Distances

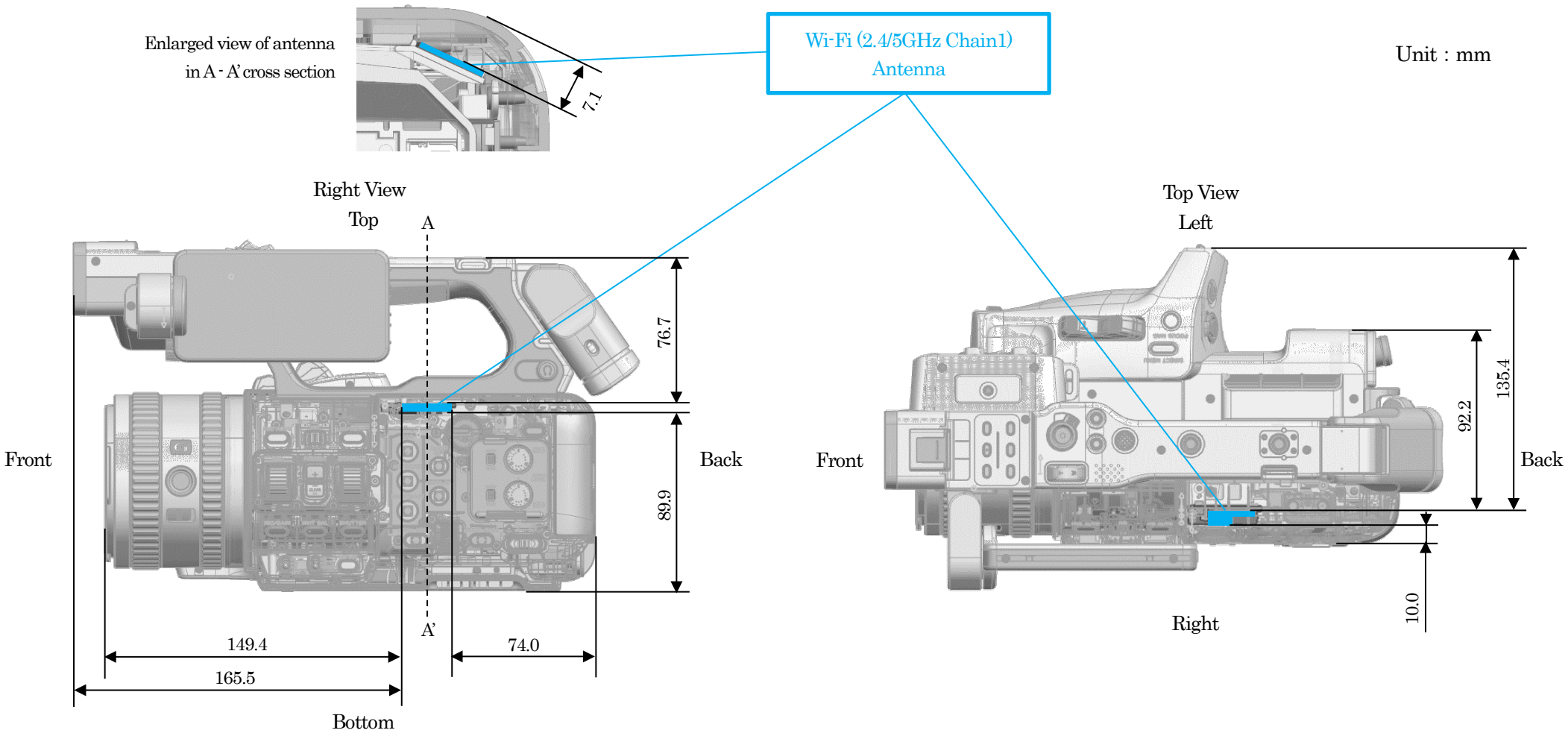

(b) Chain 1

Figure D-7 Antenna Dimensions and Separation Distances

D.3. Body-Worn Exposure Conditions

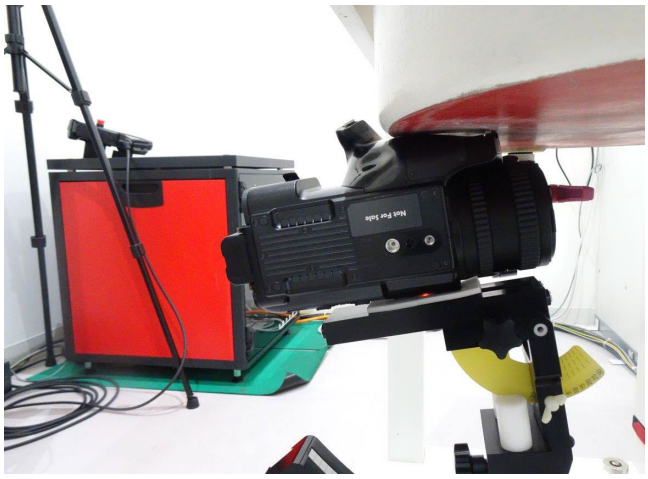

Figure D-8 Left

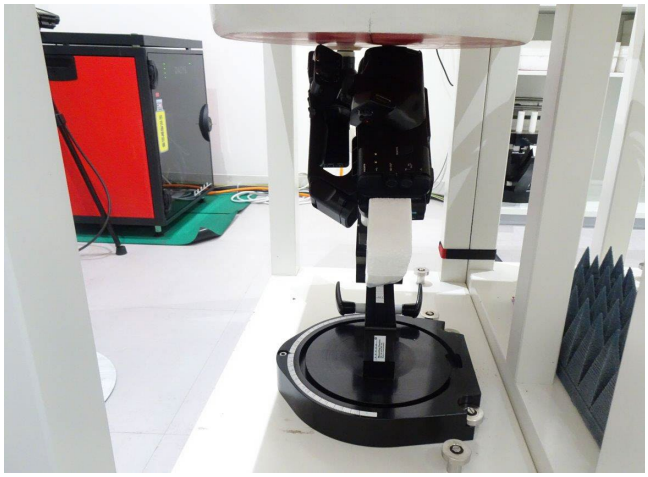

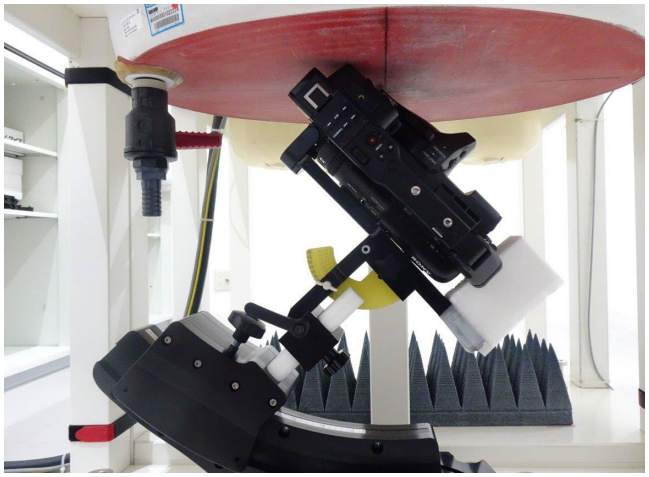

Figure D-9 Left-Front

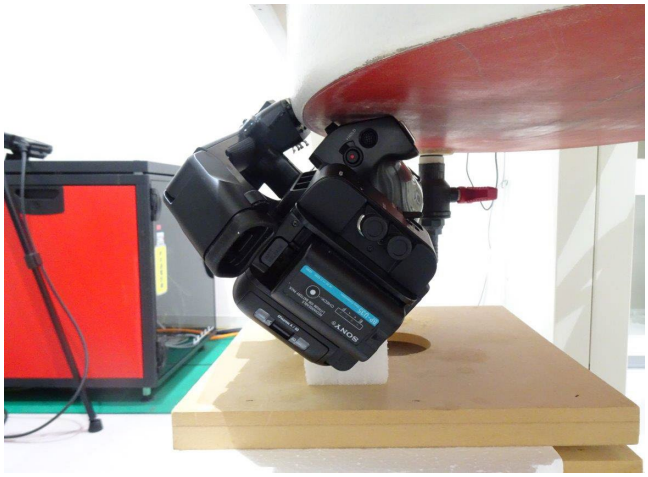

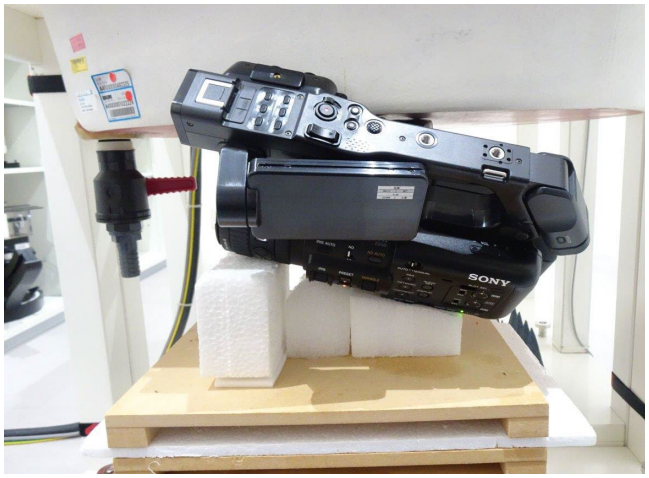

Figure D-10 Left-Top

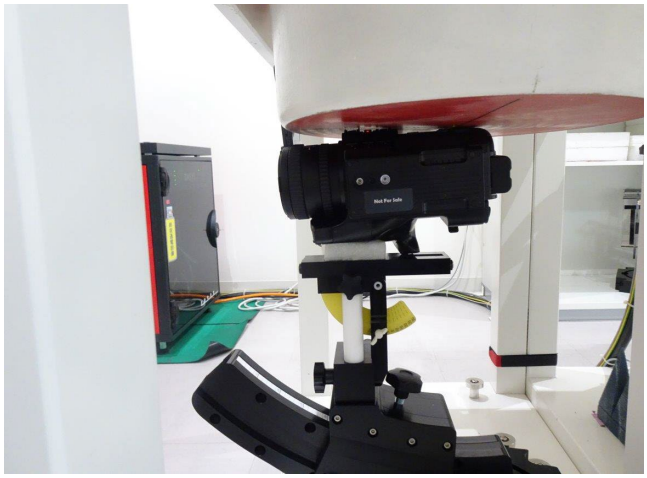

Figure D-11 Right

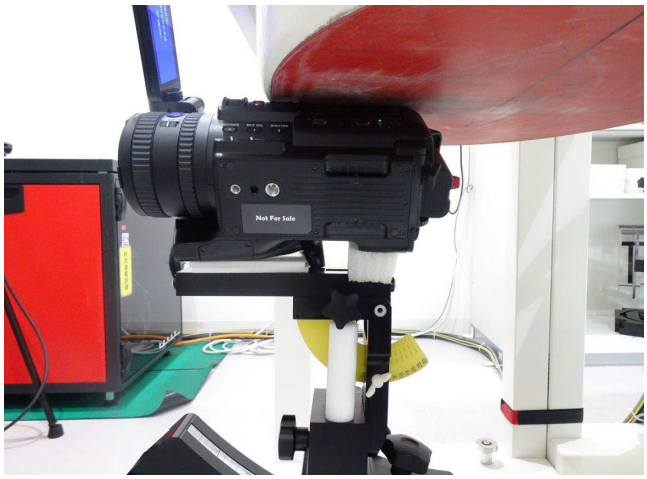

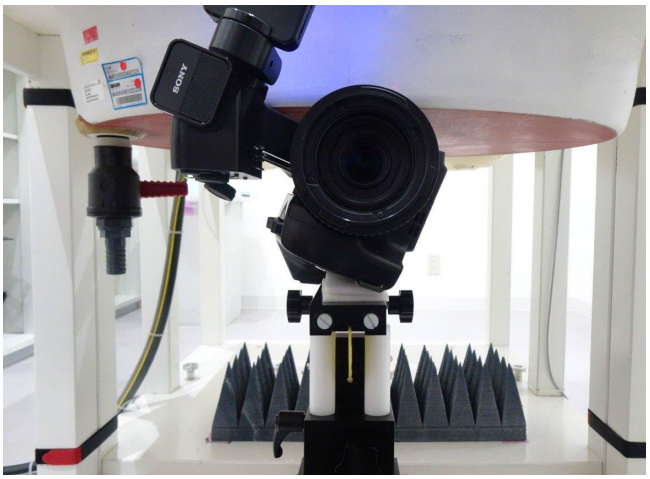

Figure D-12 Right Top