[Sensor Tag]

User Manual

Model name: LBBC0ZZ2AM

CONFIDENTIAL

Revision History

Date	Revision	Change point
	1.0	Original

Table of contents

1 Description 4
2 Product specification 5
2.1 Hardware specification 5
2.2 Body shape and dimensions 6
2.3 Block diagram 7
2.4 Operation Mode 8
2.5 Label 8
2.6 Package 9
3 Appendix 10
3.1 Antenna Specification 10
3.2 Antenna Setup 10
3.3 Antenna directivity 10
3.4 Tx timing chart 10
4 Information of importer, manufacturer and factory 11
5 Applicable standards and certification 12
6 NOTICE 14
6.1 Storage and operation conditions 14
6.2 Caution for use 14
6.3 Limitation of applications 15
7 Note on safety 16
8 Warranty for product 17
8.1 Warranty period and its scope 17
8.2 Warranty exception 18

1 Description

- LBBC0ZZ2AM is the wireless sensor tag for wireless sensor network. This product can send the sensor data to the gateway (LBAE0ZZ2AG).
- IEEE802.15.4 frequency band is 2405MHz~2480MHz.
- Battery is CR2450R(Coin Battery)
- Waterproof performance equivalent to IP54.
- It is used in the transportation of pharmaceutical products and medical equipment, and is not intended to be used in environments that require high reliability such as automobiles, and power plants.
- No accessories or peripherals. Not required.

2 Product specification

2.1 Hardware specification

Model Name		LBBC0ZZ2AM
Wireless communication	Interface	IEEE802.15.4
	Frequency	2405MHz - 2480MHz +/-9ppm (+/-30ppm@-30℃~+85℃)
	Channel BW	5MHz
	Modulation	OQPSK
	Antenna	Monopole pattern antenna (less than 0.3dBi)
	RF output power	Less than 6dBm Peak e.i.r.p.
Power supply	Battery	CR2450R(500mAh)
Hardware	Human interface	Push switch*1 LED*2 (Red & Green)
	Accessory	-
Operating environment	IP grade	IP54
	Temperature	-20degC ~ +70degC
	Humidity	0%RH ~ 90%RH (non-condensing)
Case	Material	Polycarbonate
	Flame retardancy	UL94 V-0
	Minimum Thickness	0.6mm

2.2 Body shape and dimensions

External

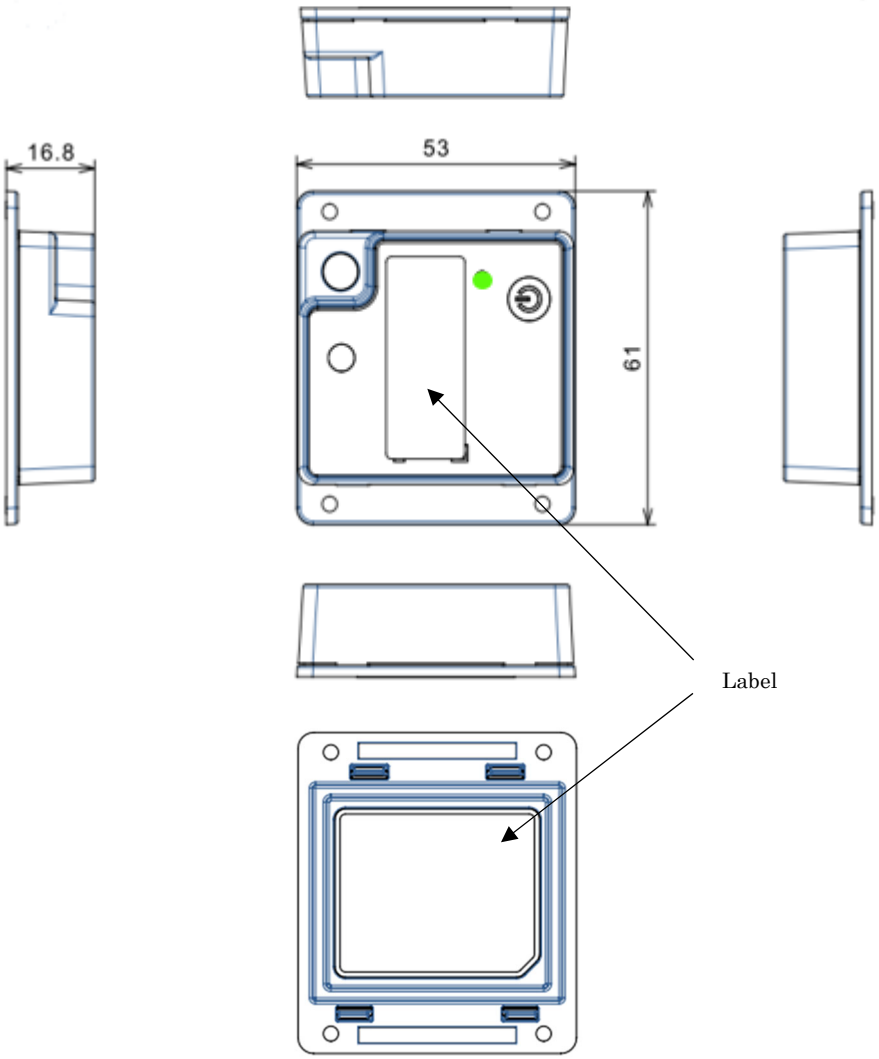

Internal

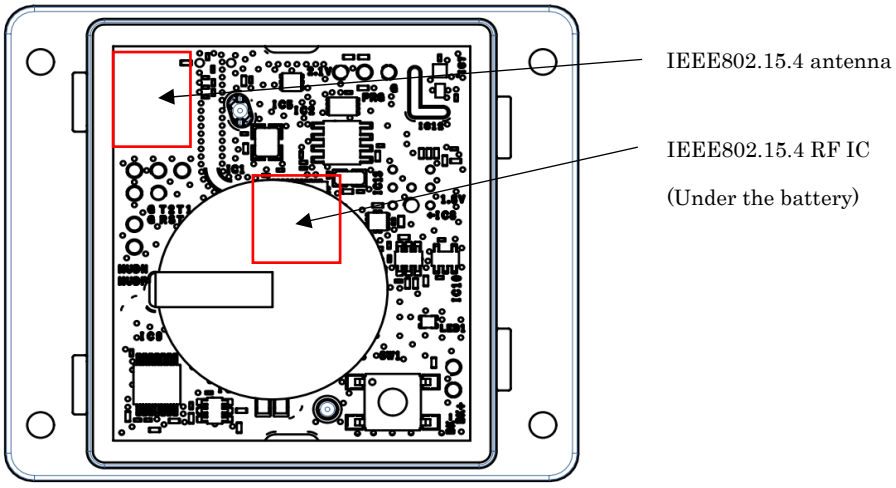

2.3 Block diagram

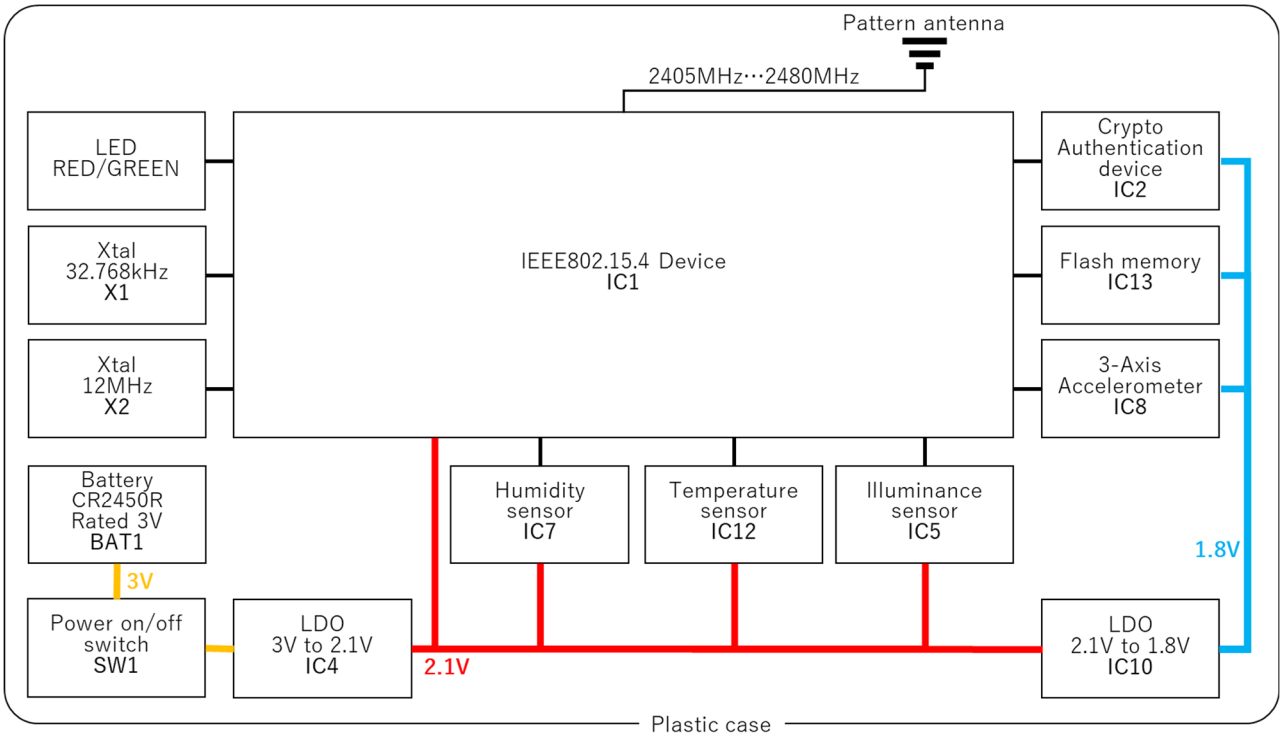

Block Diagram of product

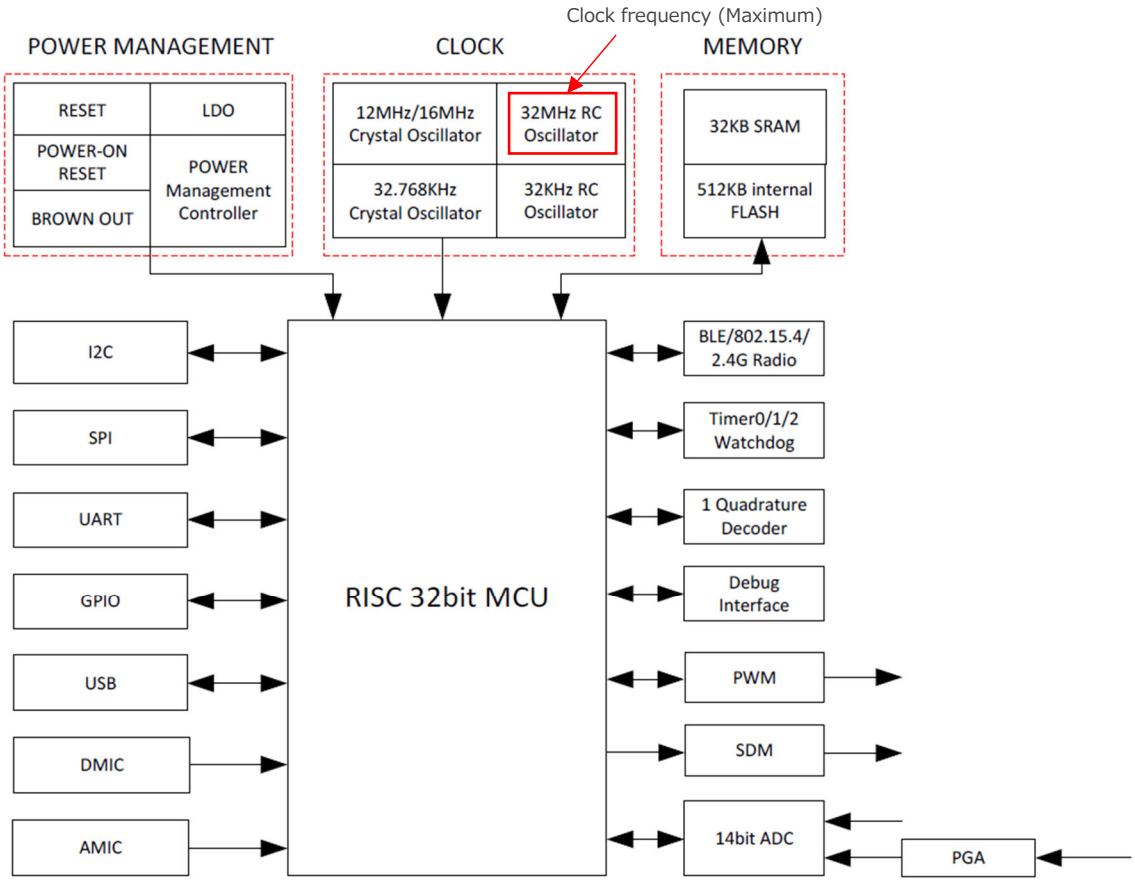

Block Diagram of RF device

2.4 Operation Mode

Mode	Sensor	IEEE802.15.4
Sleep	OFF	OFF
Measuring	ON	OFF
802.15.4 Tx	OFF	Tx
802.15.4 Rx	OFF	Rx

2.5 Label

Top Label

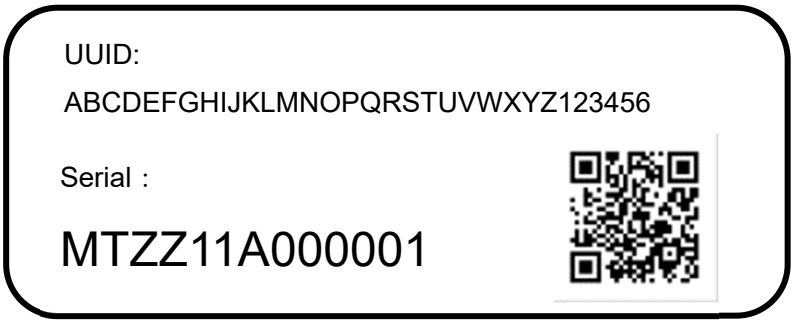

Bottom Label

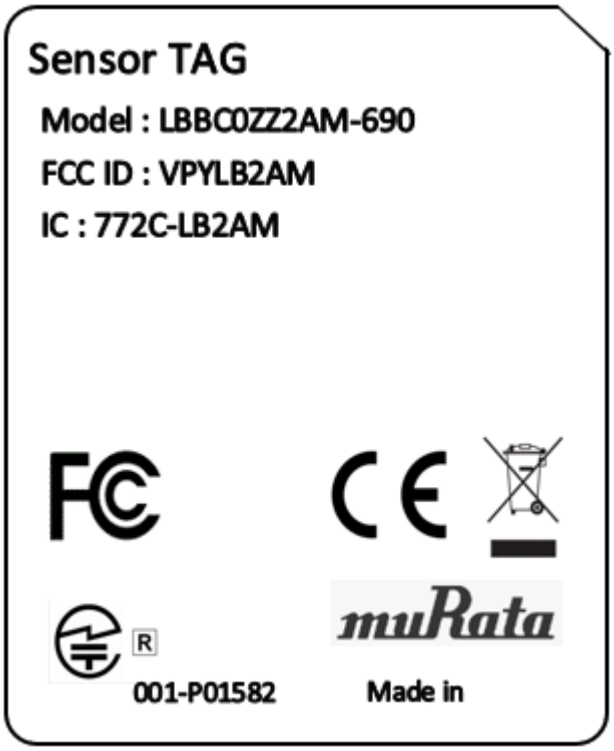

2.6 Package

100 tags packed in the box.

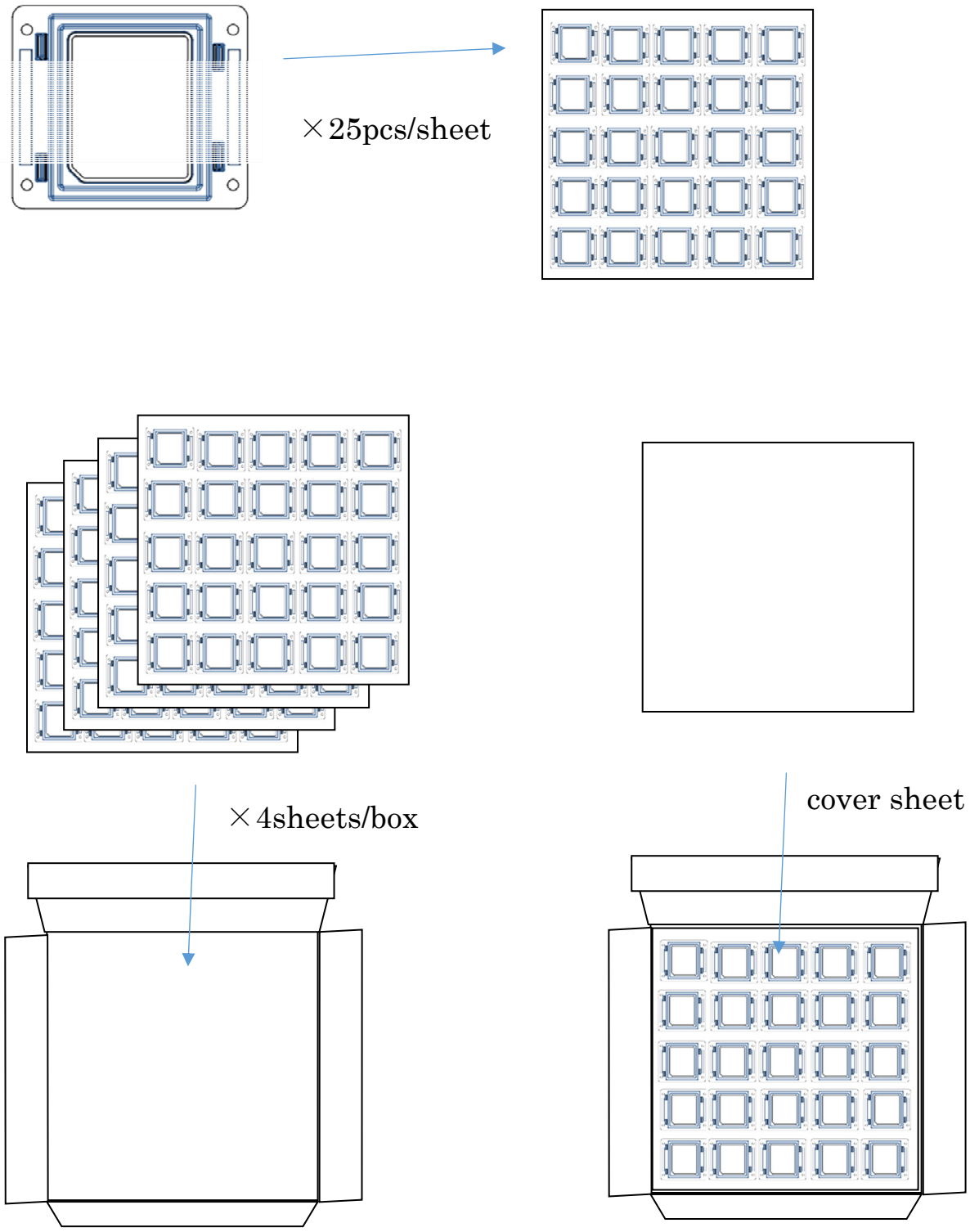

3 Appendix

3.1 Antenna Specification

Model name	IEEE802.15.4 antenna
Frequency	2405MHz…2480MHz
Antenna Type	Pattern antenna
Connector type	-
Peak gain	0.3dBi
Photo	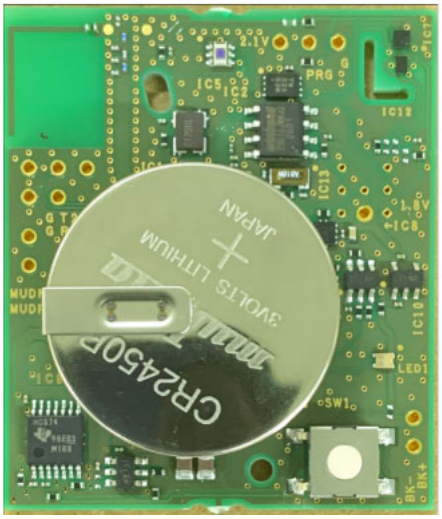

3.2 Antenna Setup

The antenna of this product is built-in pattern antenna for IEEE802.15.4..

3.3 Antenna directivity

Omnidirectional antenna.

3.4 Tx timing chart

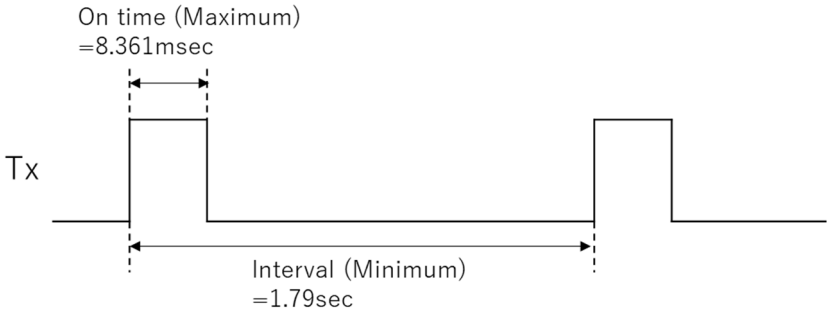

*The Conducted power test was modified to allow measurements under 100% continuous radiation conditions as a conservative condition. The maximum duty ratio in actual use is less than 8.361msec/1.79sec = 0.5%.

4 Information of importer, manufacturer and factory

- Information of the importer

  Company name: ___

  Address: ___

- Information of the manufacturer

  Company name: Murata manufacturing Co., Ltd.

  Address: 1-10-1 Higashikotari, Nagaokakyo-shi, Kyoto 617-8555 Japan

- Information of the factory

  Company name: Komatsu Murata manufacturing Co., Ltd.

  Address: Hikari-machi, Komatsu-shi, Ishikawa 923-8626 Japan

5 Applicable standards and certification

This product complies with the radio regulations described in the specification. Be sure to comply with following points upon usage.

- When using this product, use an application that is compatible with the country / region of use.
- DO NOT use applications from different regions.
- DO NOT disassemble or modify the product.
- DO NOT peel off the product label.

This device complies with part 15 of the FCC Rules. Operation is subject to the following two conditions: (1) This device may not cause harmful interference, and (2) this device must accept any interference received, including interference that may cause undesired operation.

U.S. manufacturing contact information

Company name: Murata Electronics North America, Inc.
Address: 2200 Lake Park Drive, Smyrna, GA 30080-7604, USA.
Phone: +1 770 436 1300

FCC CAUTION

Changes or modifications not expressly approved by the party responsible for compliance could void the user's authority to operate the equipment.

Note: This equipment has been tested and found to comply with the limits for a Class B digital device, pursuant to part 15 of the FCC Rules. These limits are designed to provide reasonable protection against harmful interference in a residential installation. This equipment generates, uses and can radiate radio frequency energy and, if not installed and used in accordance with the instructions, may cause harmful interference to radio communications. However, there is no guarantee that interference will not occur in a particular installation. If this equipment does cause harmful interference to radio or television reception, which can be determined by turning the equipment off and on, the user is encouraged to try to correct the interference by one or more of the following measures:

- Reorient or relocate the receiving antenna.
- Increase the separation between the equipment and receiver.
- Connect the equipment into an outlet on a circuit different from that to which the receiver is connected.
- Consult the dealer or an experienced radio/TV technician for help.

This transmitter must not be co-located or operated in conjunction with any other antenna or transmitter.

This equipment complies with FCC radiation exposure limits set forth for an uncontrolled environment and meets the FCC radio frequency (RF) Exposure Guidelines as this equipment has very low levels of RF energy.

IC CAUTION

This device contains licence-exempt transmitter(s)/receiver(s) that comply with Innovation, Science and Economic Development Canada's licence-exempt RSS(s). Operation is subject to the following two conditions:

1. This device may not cause interference.
2. This device must accept any interference, including interference that may cause undesired operation of the device.

L'émetteur/récepteur exempt de licence contenu dans le présent appareil est conforme aux CNR d'Innovation, Sciences et Développement économique Canada applicables aux appareils radio exempts de licence. L'exploitation est autorisée aux deux conditions suivantes :

1. L'appareil ne doit pas produire de brouillage;
2. L'appareil doit accepter tout brouillage radioélectrique subi, même si le brouillage est susceptible d'en compromettre le fonctionnement.

This equipment complies with ISED radiation exposure limits set forth for an uncontrolled environment and meets RSS-102 of the ISED radio frequency (RF) Exposure rules as this equipment has very low levels of RF energy.
Cet équipement est conforme aux limites d'exposition aux rayonnements énoncées pour un environnement non contrôlé et respecte les règles d'exposition aux fréquences radioélectriques (RF) CNR-102 de l'ISDE puisque cet appareil a une niveau tres bas d'energie RF.

6 NOTICE

6.1 Storage and operation conditions

- ✓ The product shall not be stored in an atmosphere with high temperature and high humidity.
- ✓ Any excess mechanical shock shall not be applied to the product.
- ✓ Do not store or use in the following circumstances.
  - In an atmosphere containing corrosive gas (Cl_2, NH_3, SOx, NOx etc.)
  - In an atmosphere containing combustible and volatile gases
  - In an atmosphere containing organic solvents
  - In an atmosphere with strong electromagnetic field and static electricity
  - In an atmosphere containing hot air or close to fire
  - Humid place where water condenses
  - Freezing place
  - Dusty environment

6.2 Caution for use

- ✓ Do not disassemble, modify or repair this product.
- ✓ If water or a foreign object gets inside the case, unplug the DC power supply or battery and stop using it.
- ✓ If there is smoke, a strange smell or noise, unplug the DC power supply or battery and stop using it.
- ✓ If the product is dropped or gets a strong physical impact, power it off and stop using it.
- ✓ Do not touch the product during and after being used in a low or high temperature environment.
- ✓ Corrosive gas may generate harmful substances. Do not use the product in an atmosphere containing corrosive gas.

6.3 Limitation of applications

✓ This product is designed to work under the environmental conditions described in the specification. Do not use the product in the following applications that require extremely high reliability to prevent defects which might directly cause damage to third party's life, body or property.

- Aircraft equipment
- Aerospace equipment
- Undersea equipment
- Power plant control equipment
- Medical equipment
- Transportation equipment (vehicles, trains, ships, etc.).
- Traffic single equipment
- Disaster prevention /crime prevention equipment.
- Applications that require similar complexity and/or reliability to the applications listed above

7 Note on safety

- ✓ Do not cover the product with flammable materials.
- ✓ If smoke or strange smell out of the product, turn off the product and stop use.
- ✓ Do not disassemble, modify or repair this product.
- ✓ Stop use if the product is dropped.
- ✓ Do not place the product in an atmosphere containing flammable gases

8 Warranty for product

8.1 Warranty period and its scope

- ✓ Please note that the only warranty that we provide regarding Product is its conformance to the Product Specification provided herein for 12 months from the delivery date ("Warranty Period").
- ✓ During the Warranty Period, in the event of defective Product, even if Product is used for the purpose, under the condition and in the environment specified in this Product Specification, we will at our option (a) promptly replace with the Product without defective or (b) accept the return of the defective Product. The above shall constitute our entire liability with respect to defective of our Product.
- ✓ EXCEPT AS PROVIDED IN THE ABOVE, WE HEREBY DISCLAIM ALL OTHER WARRANTIES REGARDING THE PRODUCT AND ITS RELATED SOFTWRE, EXPRESS OR IMPLIED, INCLUDING WITHOUT LIMITATION ANY WARRANTY OF MARCHANTABILITY, FITNESS FOR A PARTICULAR PURPOSE, THAT THEY ARE DEFECT-FREE, OR AGAINST INFRINGEMENT OF INTELLECTUAL PROPERTY RIGHTS.

8.2 Warranty exception

- ✓ You understand and agree that we have no liability for any defect or trouble of Products which caused by your mistake or fault in handling.
- ✓ Please note that you shall use the Product according to guide line for the safety described in this Product Specification and/or user manual which is provided to you separately ("Guide Line"). We are not liable for safety of the Product when it is used other than any way described in the Guide Line.
- ✓ We have no liability to the Product even in the Warranty Period, if it falls under one of the following items.
  - Defective Product and/or damage caused by use of the Product other than any way described in the Guide Line.
  - Defective Product and/or damage caused by repair, modification by you or any third party other than us without our prior consent.
  - Defective Product and/or damage caused by accidental fall and careless handling after delivery.
  - Defective Product and/or damage caused by natural disaster such as fire disaster, earthquake, pollution, wind, flood, lightning strike, and salt pollution, and physical or electric load over the normal condition.
  - Defective Product caused by degradation and expendable part.
  - Defective Product caused by product or device other than the Product.
- ✓ You agree and understand that we are not liable to you or to any of your customers for any damages of system, life, body injury, and property of third party caused by defective Product, and for any damages caused by measurement data of our Product.
- ✓ WE SHALL NOT BE LIABLE TO YOU OR TO ANY OF YOUR CUSTOMERS FOR ANY LOSS OF PROFIT, INDIRECT, INCIDENTAL, SPECIAL, PUNITIVE, OR CONSEQUENTIAL DAMAGES ARISING OUT OF OR RELATING TO THE USE OF THE PRODUCT OR FOR ANY ERROR OR DEFECT IN THE PRODUCT. OUR ENTIRE LIABILITY AND OUR SOLE AND EXLUSIVE REMEDY FROM ANY CAUSE OF THE PRODUCT INCLUDING, WITHOUT LIMITAION, NONPERFORMANCE OR MIS-REPRESENTAION AND REGARDRLESS OF THE FORM OF ACTION, WHETHER IN CONTRACT, TORT, OR ANY OTHER LEGAL THOROY, IS LIMITED TO THE PRICE OF APPLICABLE PRODUCT.