Your phone

Philips continuously strives to improve its products. Due to software upgrading, some contents in this user guide may be different from your product. Philips reserves the rights to revise this user guide or withdraw it at any time without prior notice. Please take your product as standard.

Turn your phone on and off

1 Press and hold power key to turn on your phone.
2 To turn off your device, press and hold power key and then select **Power off.**

Note:

- If you are turning on your phone for the first time, follow the on-screen instructions to set up your device.

Lock/unlock the touch screen

You can lock the touch screen and keys to prevent any unwanted device operations.

1 To lock, press power key.
2 To unlock, press the icon , and then flick your finger in any direction.

Keys

Learn about the main keys.

Key	Definition	Function
	Power	- Press and hold to power on/off. - Press to turn on/off the screen display. - Hold to access the Phone options, choose Silent or Airplane mode.
	Home key	- Return to the home screen. - Hold to open the list of recent applications.
	Option key	- Open a list of options available on the current screen. - On the home screen, open the Wallpaper, Manage applications and System settings.
	Back key	- Return to the previous screen or exit. - Hide the onscreen keyboard when it is opened.

	PowerSave button	Slide the button down/up to turn on/off PowerSave.
	Side volume key	-Adjust the ringer volume while in standby mode or adjust the voice volume during a call. -When receiving an incoming call, briefly press down either volume key to mute the ringtone.

Use the touch screen

Learn basic actions to use the touch screen.

Function	Operation
Tap	Touch once to select or launch a menu, option, or application.
Tap and hold	Tap an item and hold it for more than 2 seconds.
Drag	Tap an item and move it to a new location.
Double-tap	Tap an item twice quickly.
Flick	Briskly scroll up, down, left, or right to move through lists or screens.
Pinch	Place two of your fingers far apart, and then pinch them together. In some apps, like web browser, you can pinch the screen using two fingers(for example, thumb and index finger) to zoom in or zoom out when viewing a picture or a web pages.

Customize home screen

You can customize the home screen to match your preferences.

Function	Operation
Add items	Tap to enter into menu screen or widgets, tap and hold an item, and then drag it to home screen.
Move items	Tap and hold an item, and then drag it to a new location.

Remove items	Tap and hold an item, the trash bin appears at the bottom of the home screen. Drag the item to the trash bin. When the item turns red, release the item.
Select a wallpaper	In home screen, press ▭ >**Wallpaper** or tap and hold the blank area in home screen, select an image from options.

Home screen

From the Home screen, you can view your device's status and access applications.

The Home screen has multiple panels. Scroll left or right to view the panels on the Home screen. There are 5 extended home screen, slide your finger horizontally to the left and right to check each one.

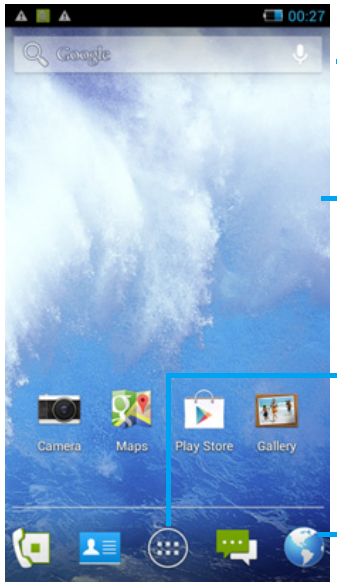

Status Bar

Search input window

Widgets and applications

Menu key: Tap to enter into applications

Shortcut icons

Notifications panel

When you get a new notification, you can open the Notifications panel to see what event notification or new information you have received.

- To open the Notifications panel, press and hold the status bar, then slide one finger downward. If you have several notifications, you can scroll down the screen to see them all.
- To hide the panel, drag the bottom of the panel upwards.

From the notifications panel, you can also view your phone's current status and use the each options.

- Open the notifications panel and then tap to open the phone's status panel.
- Place two fingers on the status bar, then slide your fingers downward.

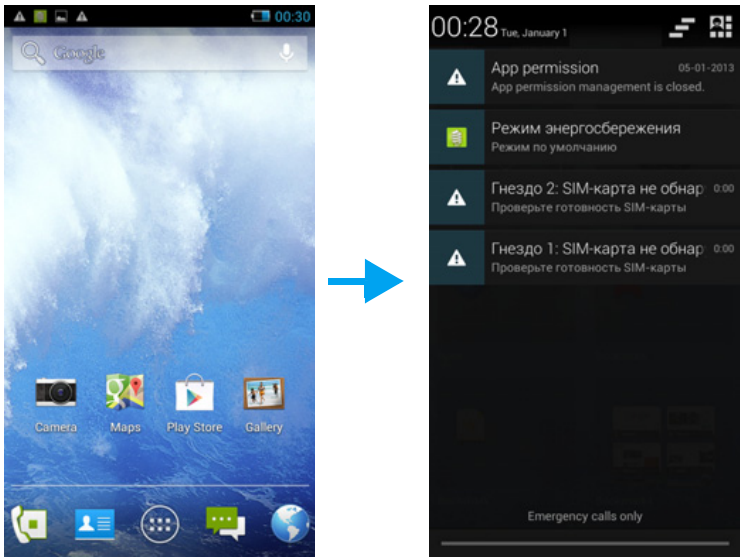

Icons and symbols

Learn about the icons and symbols on the screen.

Icons	*Function*
	Your phone will not ring when receiving a call.
	Your phone will vibrate when receiving a call.
	Flight mode activated.
	The bars indicate the battery level.
	(Blue bars) normal charging.
	(Blue bars) normal charging when the phone is turned off.
	WLAN activated.
G 3G	Your phone is connected to a GSM network. The more bars are shown the better the reception is.
G E 3G H	Your phone is connected to network.
	Downloading data.
	Uploading data.
	Call in progress.
	You have a missed call.
	Connected to PC.
	USB debugging connected.
	Bluetooth is activated.
	The headset is plugged into the phone.
	The alarm clock is activated.
	FM radio turned on in the background.
	Music is playing in the background.
	Error occurred or caution required.

Table of contents

Getting started 7
Assembling and Charge 7
Insert a Micro SD card (Memory card) 9
Personalize your phone 10
Basic function. 13
Calls. 13
Messages 14
Email 15
Manage your phonebook 16
MultiMedia 18
Music 18
Camera 19
Sound Recorder 22
FM radio 22
Google play 23
Business applications 24
Manage your calendar. 24
Alarm 25
File management 25
Search 26
Calculator 26
Connections 27
Bluetooth 27
WLAN 27
VPN 28
Mobile network sharing. 28
Internet 29
PC connections 30
Sync 30
Settings. 31
Wireless&Networks 31
Device 32
Personal 32
System 33
Safety & Precaution 34
Precaution 34
Tips. 35
Troubleshooting 35
Trademark Declaration 37
Specific Absorption Rate Information. 37
Declaration of Conformity 38

Getting started

Congratulations on your purchase and welcome to Philips!

To get the most of your product and enjoy all Philips has to offer, register your product at:

www. philips. com/mobilephones

More details about your product, please access:

www.philips.com/support

Note:

- Please read the safety instructions in the "Safety & Precaution" section before use.

Assembling and Charge

Learn about installing SIM card and charging the battery for the first use.

Insert SIM card

Follow the steps below to insert your SIM card. Remember to turn off your mobile phone before removing the back cover.

1 Remove the back cover.

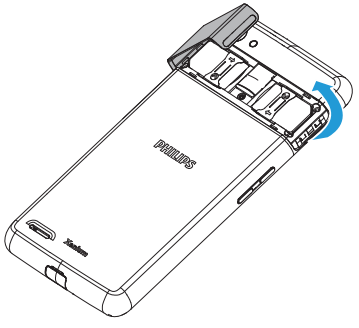

2 Insert the SIM card.

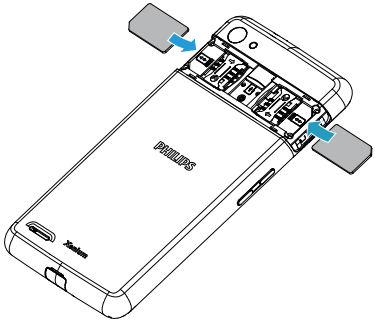

Note:

- SIM1/SIM2 both support 3G&2G network. Based on the default settings of your phone, it will connect 3G network by SIM1 directly. Also you can enter into **Settings>Wireless & networks>Mobile networks>3G service** to get your personal settings.

3 Replace the back cover.

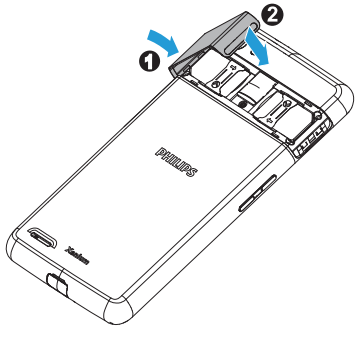

Charge the battery

The battery icon in the upper-right corner shows the battery level of charging status.

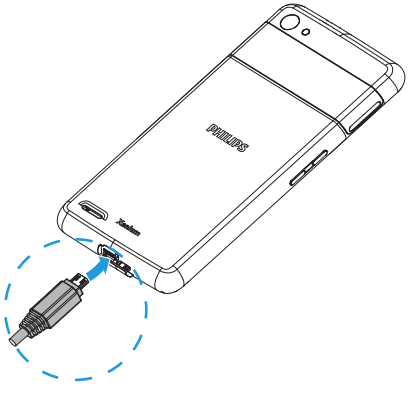

Tips:

- You can use the phone while it is charging.
- Keeping the charger plugged to the mobile phone when the battery is fully charged will not damage the battery. The only way to turn off the charger is to unplug it, so it is advisable to use an easily accessible power socket.
- If a fully charged phone left unused, it will lost its charge over time.
- If the phone is being used for the first time or the phone has not been used for a prolonged period, it may take longer time to recharge.

Insert a Micro SD card (Memory card)

Insert a memory card

You can expand the memory of your phone. Your device accepts memory cards with maximum capacities of 32 GB.

1 Remove the back cover and battery.
2 Align your micro-SD card with the slot. Put it in place.

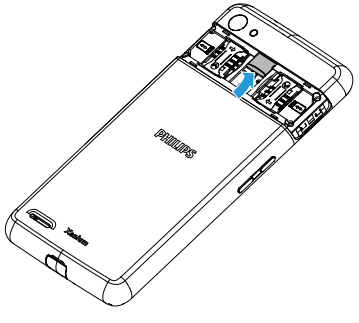

Remove the memory card

Ensure that the phone is not currently accessing the memory card. Before removing a memory card, first unmount it for safe removal.

1 In Idle screen, select ▭ > **System settings> Storage >Unmount SD card.**
2 Push the memory card gently until it disengages from the phone.
3 Remove the memory card.

Note:

- Do not remove a memory card while the device is transferring or accessing information to prevent corrupting or damaging the files in the memory card.

Format the memory card

Formatting your memory card on a PC may cause incompatibilities with your device. Format the memory card only on the device.

In Idle screen, select ▭ **> System settings> Storage >Erase SD card.**

Note:

- Before formatting the memory card, remember to make backup copies of all important data stored on your device. The

manufacturer's warranty does not cover loss of data resulting from user actions.

Personalize your phone

Time and Date

In idle screen, tap > **System settings> Date&time** to control how time and date appears on your device.

- **Automatic date & time**: Set to receive time information from the network and update the time and date automatically.
- **Automatic time zone**: Set to receive time zone information from the network when you move across time zones.
- **Set date**: Set the current date manually.
- **Set time**: Set the current time manually.
- **Select time zone**: Select a time zone.
- **Use 24-hour format**: Set to show the time in 24-hour format or 12-hour format.
- **Select date format**: Select a date format.

Tips:

- If the battery remains fully discharged, the time and date will be reset.

Set a screen lock

You can lock your device by activating the screen lock feature.

In idle screen, tap **>System settings> Personal>Security>Screen lock.**

- **None**: Disable the screen lock.
- **Slide**: Choose slide to unlock the screen.
- **Voice Unlock**:Set a voice recognition unlock.
- **Pattern**: Draw a pattern to unlock the screen.
- **PIN**: Unlock the screen by enter the PIN code.
- **Password**: Create your private password to unlock the screen.

Lock your SIM card

You can lock your phone with the PIN that is supplied with your SIM card.

1. In idle screen, tap **> System settings> Security> Set up SIM card lock> Lock SIM card**.
2. Select the SIM card, enter your PIN and select **OK**.

Note:

- If you enter an incorrect PIN too many times, your SIM card will be blocked. You must enter a PIN unlock key (PUK) to unblock the SIM card.
- If you block your SIM card by entering an incorrect PUK, take the SIM card to your service provider to unblock it.

Access applications

- Scroll left or right to another screen, select an application.
- On the Home screen, tap to access the application list.
- Press to return to the previous screen, press to return to the Home screen.
- Access recently-used applications: Press and hold to view the applications you have accessed recently.

Tips:

- Your device has a built-in motion sensor that detects its orientation. If you rotate the device while using some features, the interface will automatically switch to landscape view. To set the interface to keep the orientation when you rotate the device, select **Settings>Display>Auto-rotate screen**.

Manage applications

learn about how to view the running apps, and

- In idle screen, tap **>Manage apps.**
- Tap **Running**, you can view all the running apps, tap this app to enter it, you can tap **Stop** to choose stop running.
- Tap **Downloaded**, you can view all the downloaded apps, tap this app to enter it, you can check the detailed information of this app, tap **Uninstall** to choose unloading it.
- Tap **SD card**, you can view the apps downloaded on the SD card, you can choose to move these apps to the phone.

Basic function

Calls

Learn to use calling functions, such as making and answering calls, using options available during a call or customizing and using call-related features.

Make a call

1 In the application list, tap .
2 Dial the number directly or choose one number from the filtered list that have matching digits.
3 Make a voice call or a video call.
4 Tap to end the call.

Tips:

- The phone dialer's Smart dial features makes it quick and easy for you to make a call. Simply enter the phone number or first few letters of the person's name you want to call. Smart dial automatically searches and filters your stored contacts and the phone numbers from the call history.

Note:

- For international calls, long press 0 to enter the "+" sign for the international prefix.
- It is illegal in many areas to record a call without permission. Always ask the other party for permission before recording a call.

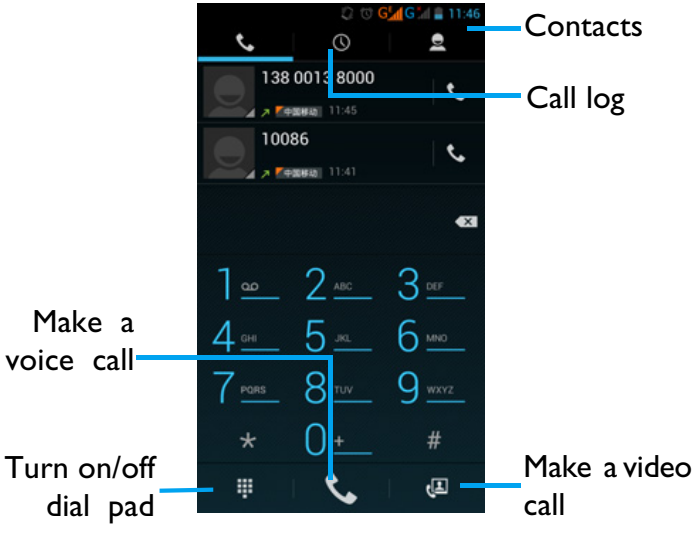

Answer/Reject a call

1 During an incoming call, press and hold and then drag your finger right to answer the call, drag left to reject the call.(Press the side volume key to adjust the volume).
2 Tap to turn on loudspeaker.
3 Tap to hang up.

Make a conference call

If network applicable, you can handle two or more calls, or make a conference call.

1 During a call, tap **+** to enter a phone number, and then tap to dial the number. The second number is dialled.
2 The first call is put on hold at this time.
3 Tap to switch the phone, tap to start conference.
4 To end the call, tap to hang up.

Make an emergency call

Without a SIM card in phone, you can make the emergency call.

In Europe, the standard emergency number is 112; in the UK, it is 999.

Tips:

- If you've enabled but forgot your lock password or lock pattern, you can still make emergency calls by tapping Emergency call on the screen.

Messages

You can use your phone to send text message and multimedia messages.

Send a message

1 In the application list, tap .
2 Tap New message .
3 Enter the number or tap to select the number from phonebook.
4 Select the text field and enter your message text.
5 Press >**Add subject** and add a subject for the message.
6 Tap and attach a file. (Pictures, Videos, Audio or Slideshow)
7 Tap to send the message.

Note:

- Copyright protected pictures and sound cannot be sent by MMS.

Email

Set up an email account

1 On the home screen, tap .
2 Enter your email address and password.
3 Select **Manual setup** and choose **POP3/IMAP/ Exchange** and then tap **Next**.
4 If the account type you want to set up is not in the phone database, you'll be asked to enter more details.
5 Follow the on-screen instructions.

Note:

- When you are finished setting up the email account, the email messages are downloaded to your device.
- Select an account name at the top of the screen, and then select the account from which you want to retrieve messages.
- Consult your mail service provider for the mail server configuration.

Send an email

1 Tap and start to edit the email.
2 Select the subject field and text input field to enter a subject and your email text.
3 Press , select the **Cc/Bcc** field and add more recipients.
4 Press and attach a file. You can attach media files, contacts, or location information.
5 Tap to send the mail.

Tips:

- If you are offline or outside your service area, the message will be held in the message thread list until you are online and in your service area.

View an email message

When you are finished setting up the email account, email messages will be downloaded to your device. If you have created two or more accounts, you can switch between them. .

From the message view, use the following options:

- To move to the next message, select < / > .
- To move the message to another folder, press >**Move**.
- To delete the message, select .
- To reply to the message, select .
- To mark the message as important, select .
- To mark the message as unread, select .

Manage your phonebook

Learn about basic phonebook function.

Add a new contact

1 Tap to enter the **Contacts**.
2 Tap and select a memory location.
3 Add phone number and details as desired.
4 Tap **Done** to finish saving.

Tips:

- You can create contacts from the dialling screen by selecting **Add to contacts**.
- For contacts on the smart phonebook, you can add detailed information, like home number, office number, contact pictures and ringtones.

Find a contact

1 On the home screen, tap to enter the **Contacts**.
2 Scroll up or down the contact list.
3 Tap and enter the first few letters of the name in the search bar. (For example "John Henry" enter JH)
4 Select the contact from the option list.

Create your namecard

1 In the application list, tap > .
2 Select **Set up my profile** at the top of the contact list.
3 Enter your personal details.
4 Tap **Done**.

You can send your namecard to others or share it by pressing and selecting **Share**.

Create a group of contacts

By creating groups of contacts, you can manage multiple contacts and send a message to an entire group.

1 In the application list, tap > .
2 Tap and select a memory location.
3 Enter a name and customize the settings for the group.
4 Add members to the group.
5 Tap **Done**.

Import/Export your contacts

You can import contact files from a memory card to your device and export contacts from your device to a memory card.

1 In the application list, tap .
2 Press > **Import/export**.
3 Select a memory location.
4 Select contacts to copy.
5 Tap **OK** to confirm..

MultiMedia

Music

Listen to your favorite music while go with the music player.

Play music

1 Tap to open the music screen.
2 Select a music category.
3 Using the following keys to control playback.

Function	Definition
	Play and resume playback.
	Pause the playback.
	Select previous track.
	Select next track.
	Select the play mode: • Repeat once (play current file repeatedly) • Repeat all (play all the files in the folder repeatedly)
	Activate Shuffle mode, play current file randomly.
	Select to enter into playlist.
	Return to the home screen.

Music settings

Press to enter into Settings:

- **Party shuffle**: Play all the files in the folder randomly.
- **Add to playlist** : Add new music to your playlist.
- **Use as ringtone**: Choose music as ringtone.
- **Delete**: Delete the music from playlist.
- **Sound effects**: Select a sound effect.
- **Library**: Return to music category.
- **Search**:Search for a music.

Note:

- When listening to music, adjust the volume to a moderate level. Continuous exposure to high volume may impair your hearing.

Camera

Learn about camera function. Let you take photos as desired by using your phone.

Take a photo/video

1 In the application list, select .
2 Tap to switch to the camcorder..
3 Aim the camera lens at the subject and make any necessary adjustments.
4 To zoom in, place two fingers on the screen and slowly spread them apart. To zoom out, pinch them together.
5 Tap where you want to focus on the preview screen.The focus frame moves to the place you tapped and changes to green when the subject is in focus.
6 Select to take a photo/video.The photo/video is saved automatically.

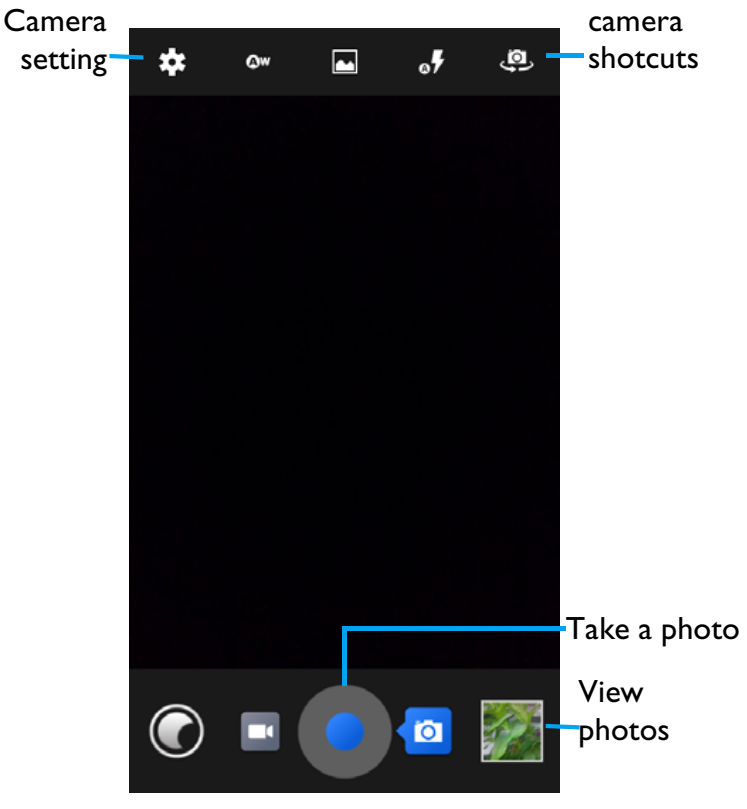

Camera shortcuts

Option	Function	
	Switch	Switch to the front camera to take a photo of yourself.
	Flash setting	You can turn on or off the flash manually, or set the camera to use the flash when needed.
	Normal mode	Take photo in normal mode.
	HDR	Take three photos with different exposures and then combine them to improve the contrast ratio.
	Beauty	Hide facial imperfections.
	Panorama	Take panoramic photos.
	Multi angle view	You can capture shots of a moving subject and then combine them into a single photo that shows the action.
	Auto scene detection	Simply select the proper mode for your shooting conditions and subjects.
	Smile shot	Set the device to recognise people's faces and help you take photos of them when they smile.
	Best shot	Select the best mode for your shooting.
	EV bracket shot	Adjust the exposure value for your shooting.
	Settings	Camera settings.

Camera settings

Option	Function
GPS location info	Set the camera to include location information for your photos.
Exposure	Adjust the exposure value to change the brightness.

Color effect	Apply a special effect, such as sepia or black and white tones.
Scene mode	Change the scene mode.
White balance	White balance enables the camera to capture colors more accurately by adjusting to your current lighting environment.
Image Properties	Select a quality level for your photos.
Anti-flicker	Reduce blur caused by the device's vibration or movement.
Restore defaults	Restore to default settings.
Zero shutter delay	Turn on zero shutter delay, which will help capture the picture.
Face Detection	Set the device to recognise people’s faces and help you take photos of them.
Self timer	Select the length of the delay before the camera takes a photo.
Continuous shot	Continuous shooting function.
Picture size	elect the size of picture.
ISO	Adjust the sensitivity of the imaging sensor.
Face beauty	Hide facial imperfections.
EIS	Adjust the EIS level.
Microphone	Turn on/off microphone.
Audio mode	Activate the meeting mode to improve the quality of recording.
Timer lapse interval	Select the length of the delay before the camcorder starts recording a video.
Effects	Apply a special effect.
Video quality	Select a quality level for your photos.

View photos

After taking photos, select the image viewer icon to view the taken photos or tap to view photos.

- To view more photos, scroll left or right.
- To zoom in or out, place two fingers on the screen and slowly spread them apart or pinch them together. To return to the original size, double-tap the screen.
- To send a photo to others, tap .
- Press the Option key to access the following options:
  - **Delete**: delete the photo.
  - **Slideshow**: To start a slide show.
  - **Edit**: To edit the photo with the image editor.
  - **Rotate right**: To rotate the photo clockwise.
  - **Rotate left**: To rotate the photo anti-clockwise.
  - **Crop**:To add the photo to the clipboard.
  - **Set picture as**: To set the photo as your wallpaper or a contact image.
  - **Details:** To view the detailed information of this photo.

Sound Recorder

Learn to operate your device's voice recorder.

Record a voice memo

1. Open the application list and tap .
2. Tap ● to start recording.
3. Tap ■ to finish recording and choose to save/discard it. (Tap ▶ to listen to the voice memo before saving or discarding)

Play a voice memo

1. Tap **>Playlists>My recordings** to access the voice memo list.
2. Select a voice memo to listen.

FM radio

Learn to listen to music and news on the FM radio. To listen to the FM radio, you must connect a headset, which serves as the radio antenna.

Listen to the FM radio

1. Plug a headset into your phone.

2 Tap to enter into FM radio.
3 Tap ⏮ / ⏭, The FM radio scans and saves available stations automatically. Tap 〈 / 〉 to tune the radio frequency by +/-0.1 MHz.
4 Tap ⏻ to close the radio.

Radio settings

Tap ⋮ to access the following options:

1 **Search**: scan the radio channels and saves available stations automatically. Tap ☰ to view the playlist.
2 **Speaker**: turn on the Speaker.
3 **FM Recording**: record the FM voice you want to record, Tap ● to start recording, tap ■ to stop recording. Tap ♫ >**Playlists** > FM **recordings** to access the voice memo list.

Business applications

PowerSave

Slide the button on the left side of the phone down/ up to turn on/off power save.

1 In the application list, tap .

2 You can select **Best mode** or **My mode**:

- **Best mode**: Retain call, SMS, disable data connection.
- **My mode:** User can customize their own powersave mode.

Tap to enter into my mode setting: set Brightness, Sleep time, select whether to disable WLAN/mobile data/blue tooth/GPS and whether to clean running Apps.

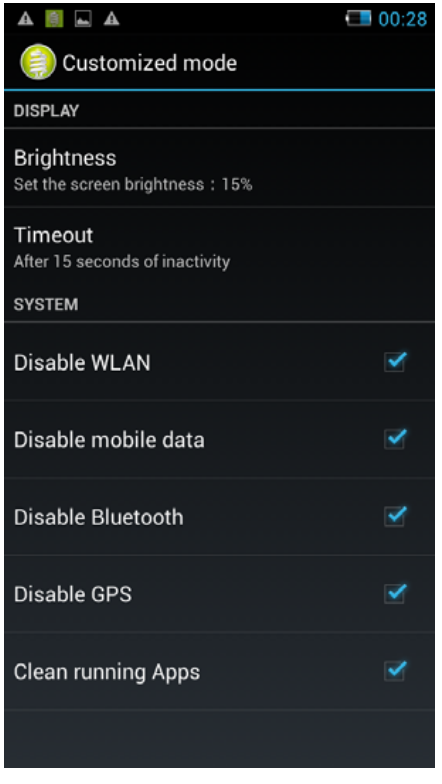

Manage your calendar

You can create your to-do list and make a plan on your calendar.

View the calendar

1 In the application list, tap 28.
2 Tap the date at the top of the screen.
3 Select a view mode:
   - **Day**: Hourly blocks for one full day.
   - **Week**: Hourly blocks for the days in one full week.
   - **Month**: A full month in one view.
   - **Agenda**: A list of all the events and tasks scheduled for a specific period.

Create an event

1 In the application list, tap 28.
2 Tap >**New event**.
3 Enter the details of the event and select **Done**.
4 While viewing an event, tap to edit events you have created, tap **Done** to save the update.

Alarm

Learn about how to set and use an alarm.

Set an alarm

1 In application list, tap .
2 Tap >**On** and set the details of the alarm, or turn on the existing alarm.

Stop an alarm

When the alarm rings,

- Select : The alarm stops.
- Select : The alarm will sound again after 10 minutes.

Create a world clock

Tap to select a city in the world list.

Use the stopwatch

Tap >**Start** to begin the stopwatch.When you are finished, select **Stop**.

Use the countdown timer

1 Tap ⌛ .
2 Set the length of time to count down.
3 Select **Start** to begin the countdown.
4 When the timer expires, select **Stop** to stop the alarm. Tap 🗑 to clear time data.

File management

View your files

Learn to access various types of files saved in your device.

1 Tap to open your files.
2 Open a file, tap to create a new folder.
3 To sort files or folders, tap ⋮ and select **Sort**.
4 To search for files saved in your phone, tap. 🔍.

Manage your files

Tap ⋮ , and select **Select file or folder**. You can copy, move or delete a file in a folder.

- Tap , copy the file.
- Tap ⋮ , rename the file.
- Tap 🗑 , delete files.

Search

1 In the idle screen, tap 🔍.
2 You can input the text on the srearching bar or tap 🎤 to enter text by speaking.
3 When you see the microphone image, speak out the words you want to type.
4 You can choose to search from the phone, SD card or Internet.
5 Select a search result.

Calculator

Learn to perform calculations with your phone.

- Use the keys on the screen to perform basic calculations. (Scroll the screen to view the scientific calculator).
- Press ▭ >**Clear history** to clear the calculation history.

Connections

Bluetooth

Your phone can connect to a compatible Bluetooth device for exchanging data.

Turn on/off Bluetooth

1 From the Home screen, tap > **Bluetooth.**
2 Select to turn on/off the Bluetooth.
3 Tap the Bluetooth to enter into it for other bluetooth settings.

Note:

- Turn off Bluetooth when not in use to save battery power, or in places where using a wireless device is prohibited, such as on board an aircraft and in hospitals.

Receive data via Bluetooth

1 Turn on the Bluetooth firstly, then tap > **Bluetooth** to make device visible.
2 Then select **Search for devices.**
3 Select a device, Enter a pair password and select **Accept** to pair with the other device.
4 On the receiving device, accept the file.

Note:

- Some devices, especially headsets or hands-free car kits, may have a fixed Bluetooth PIN, such as 0000. If the other device has a PIN, you must enter it.
- Received data is saved to the bluetooth folder. If you receive a contact, it is automatically saved to the phonebook..

Send data via Bluetooth

1 Select a file or item, such as a contact, calendar event, memo, or media file, from an appropriate application or My files.
2 Select an option for sending data via Bluetooth.
3 Search for and pair with a Bluetooth-enabled device.

Wi-Fi

Learn to use your phone's wireless networking capabilities to activate.You can connect to the Internet or other network devices anywhere an access point or wireless hotspot is available.

Turn on Wi-Fi and connect to a Wi-Fi

1 From the Home screen, tap **>Wireless & networks> Wi-Fi.**
2 Drag the Wi-Fi switch to the right, turn Wi-Fi on.
3 Your device searches for available Wi-Fi APs automatically.
4 Select an AP.
5 If you selected a secured network, you'll be asked to enter the network key or password.
6 Select **Connect**.

VPN

Learn to create virtual private networks (VPNs) and connect

Set up a VPN profile

1 In the application list, tap **>Wireless & networks>More>VPN**
2 Tap **+** to enter a name for the VPN server and select a VPN type.
3 Change the options as required.
4 When you are finished, select **Save**.

Tips:

- The options available may vary depending on the VPN type.
- Your device should already be configured with Internet access. If you have trouble accessing the Internet, you must edit the connections. If you are not sure what information to enter, ask your VPN administrator.
- To use this feature, you must activate the screen lock feature.

Connect to a VPN

1 In the application list, tap **>Wireless & networks>VPN**.
2 Select a private network.
3 Enter the user name and password, and then select **Connect**.

Mobile network sharing

Learn to set your device as a wireless modem or wireless access point for PCs or other devices, and share your device's mobile network connection.

Share mobile network via USB

1 Using a USB cable, connect the multifunction jack on your device to a PC.

2 In the application list, select **Settings>Wireless and network>More>Tethering & portable hotspot**.
3 Select **USB tethering** to activate the USB tethering feature. Your device shares the mobile network connection on your PC.
4 To stop sharing the network connection, tap to turn off USB tethering.

Internet

Learn to access and bookmark your favourite web pages.

Browse a webpage

1 In the application list, tap .
2 To access a specific webpage, select the URL field, enter the web address.
3 Start to view the webpages.

While browsing a webpage, access the following options:

- To zoom in or out, place two fingers on the screen and slowly spread them apart or pinch them together.
- To open/close the window, tap .
- To bookmark the current webpage, press > **Save to bookmarks**.
- To view your download history, press >**Bookmarks/History**.
- To change the browser settings, press >**Settings**.

PC connections

Learn to connect your phone to a PC with a USB cable in USB connection modes.

1 Connect your phone to a computer with a USB cable.
2 When connected, select **Turn on USB storage**.
3 You phone act as a removable disk. If you insert a memory card in the device, you can also access the file directory of the memory card by using the device as a memory card reader.
4 Copy files from the PC to the memory card.
5 When you are finished, select **Turn off USB storage**.

Settings

Wireless&Networks

Function	Definition .
SIM management	Set the dual SIM card information/set the SIM card for data connection, call, message.
Wi-Fi	Activate the Wi-Fi feature to connect to a Wi-Fi AP and access the Internet or other network devices.
Bluetooth	Activate the Bluetooth feature to exchange information over short distances.
Data usage	Keep track of your data usage amount, and customise the settings for the limitation.
Airplane mode	Activate Flight mode to disable all wireless functions on your device. You can use only non-network features.
VPN	Set up and manage virtual private networks (VPNs).
Tethering& portable hotspot	•Set to use your device as a wireless modem by making a USB connection with a computer. •Set to use your device as a wireless access point for other devices. •Activate the Bluetooth tethering feature to share your mobile network with computers via Bluetooth.
Mobile networks	•Set to use data connections on any mobile network. •Set to use data connections when you are roaming.
USB Internet	Sharing Windows PC internet via USB cable

Device

Function	Definition .
Audio profiles	•Select the profiles of the phone. •Set the volume and type for ringtong, alarm and notification.
Display	Change the settings to control the display and backlight on your device.
Storage	View memory information for your device and memory card.You can also format the memory card.
Battery	View the amount of battery power consumed by your device.
Apps	Manage running applications, move applications to or from the storage card, and install or uninstall programs.

Personal

Function	Definition .
Location access	Select the sources to use when determining your location.
Security	Set a screen lock or manage the credential storage.
Language&input	Set the operating system language and region. You can also set onscreen keyboard options.
Backup&reset	Reset your settings to the factory defaults and delete all your data.

Account

Add your email accounts, See “Email” on page 16.

System

Function	Definition .
Date&time	•Set the date and time, time zone, and date or time format. •Choose the time and date formats that suit you.
Phone number location	Display phone number location
Scheduled power on&off	Set the time to power on/off automatically.
Accessibility	Use these settings when you've downloaded and installed an accessibility tool, such as a screen reader that provides voice feedback. You can turn accessibility functions or services on or off.
Developer options	Tap **About phone>Build number** for seven times, you can open the Developer Options. Activate and change the settings for application development..
About phone	View different information about the phone, such as the battery, legal information, model number, software version, base band version and build number. If the network is available, tap **System updates** to update the system to latest version.

Safety & Precaution

Precaution

Keep your phone away from small children

Keep your phone and all accessories out of the reach of small children. Small parts may cause choking or serious injury if swallowed.

Radio Waves

Your phone transmits/receives radio waves in the GSM/WCDMA.

Check with the vehicle manufacturer that electronic equipment used in your vehicle will not be affected by radio energy.

Switch off your phone...

Turn off the phone when in an aircraft. The use of mobile phones in an aircraft may be dangerous for the operation of the aircraft, disrupt the mobile phones network and may be illegal.

In hospitals, clinics, other health care centers and anywhere else where you may be in the close vicinity of medical equipment.

In areas with a potentially explosive atmosphere (e.g. petrol stations and also areas where the air contains dust particles, such as metal powders).In a vehicle transporting flammable products or a vehicle powered by liquefied petroleum gas (LPG).In quarries or other areas where blasting operations are in progress.

Your mobile phone and your car

Avoid using your phone while driving and obey all regulations that restrict the use of mobile phones while driving. Use hands free accessories to increase your safety when possible. Ensure that your phone and car kit do not block any air bags or other security devices fitted in your car.

Handle your phone carefully and sensibly

For the optimal and satisfactory operation of the phone you are recommended to use the phone in the normal operating position.

- Do not expose your phone to extreme temperatures.
- Do not immerse the phone in any liquid; if your phone is damp, switch it off, remove the battery and let them dry for 24hrs before using them again.
- To clean the phone, wipe it with a soft cloth.
- In hot weather or after prolonged exposure to the sun (e.g., behind a window or a windscreen), the temperature of your phone's casing might increase. Be very careful in this case when picking up your phone and also avoid using it with an ambient temperature over 40° C.

Protect batteries from damage

You should only use Philips Authentic Accessories, as the use of any other accessories may damage your phone and may be dangerous, and will make all guarantees for your Philips phone null and void. The use of an unspecified type of battery may also cause an explosion.

Make sure damaged parts are replaced immediately by a qualified technician and that they are replaced with genuine Philips replacement parts.

- Your phone is powered by a rechargeable battery.
- Use specified charger only.
- Do not incinerate.
- Do not deform or open the battery.
- Do not allow metal objects (such as keys in your pocket) to short circuit the battery contacts.
- Avoid exposure to excessive heat (>60° C or 140° F), moisture or caustic environments.

Environmental care

Remember to observe the local regulations regarding the disposal of the packaging materials, exhausted batteries and old phone and please promote their recycling.Philips has marked the battery and

packaging with standard symbols designed to promote the recycling and appropriate disposal of your eventual waste.

:The labeled packaging material is recyclable.

:A financial contribution has been made to the associated national packaging recovery and recycling system.

:The plastic material is recyclable (also identifies the type of plastic).

Hearing Protection

When listening to music, adjust the volume to a moderate level.

Continuous exposure to high volume may impair your hearing.

WEEE Marking in the DFU: "Information to the Consumer"

Disposal of your old product

Your product is designed and manufactured with high quality materials and components, which can be recycled and reused.

When this crossed-out wheeled bin symbol is attached to a product it means the product is covered by the European Directive 2002/96/EC

Please inform yourself about the local separate collection system for electrical and electronic products.

Please act according to your local rules and do not dispose of your old products with your normal household waste. The correct disposal of your old product will help prevent potential negative consequences for the environment and human health.

This device may contain commodities, technology or software subject to export laws and regulations from the US and other countries. Diversion contrary to law is prohibited.

Tips

Pacemakers

If you have a pacemaker:

- Always keep the phone more than 15 cm from your pacemaker when the phone is switched on, in order to avoid potential interference.
- Do not carry the phone in a breast pocket.
- Use the ear opposite to the pacemaker to minimize the potential interference.
- Switch off your phone if you suspect that interference is taking place.

Hearing aids

If you are a user of a hearing aid, consult your physician and hearing aid manufacturer to learn whether your particular device is susceptible to cellular phone interference.

How to prolong the battery life of your phone

To have your mobile phone function properly, sufficient battery power is important. For the power-saving purpose, do the following, if applicable:

- Turn off the Bluetooth function of your phone.
- Set the backlight level and duration of your phone to a low value.
- Turn on the auto keypad lock, turn off the key sounds, tap vibration, or vibration alerts.
- Establish GPRS connection when needed. Otherwise, your phone will keep searching for GPRS connection, and drain your battery power.
- Turn off your phone if there is no coverage. Otherwise, the phone will keep searching for network, and drain your battery power.

Troubleshooting

The phone does not switch on

Remove/reinstall the battery. Then charge the phone until the battery icon stops scrolling. Unplug the charger and try to switch the mobile on.

The display shows BLOCKED when you switch on the phone

Somebody tried to use your phone but didn't know the PIN code nor the unblocking code (PUK). Contact your service provider.

The display shows IMSI failure

This problem is related to your subscription. Contact your operator.

Your phone doesn't return to idle screen

Long press the hang-up key or switch off the phone, check that the SIM card and the battery are installed correctly and switch it on again.

The network symbol is not displayed

The network connection is lost. Either you are in a radio shadow (in a tunnel or between tall buildings) or you are outside the network coverage area. Try from another place, try to reconnect to the network (especially when abroad), check that the antenna is in place if your mobile has an external antenna, or contact your network operator for assistance/information.

The display doesn't respond (or the display responds slowly) to key presses

The display responds more slowly at very low temperatures. This is normal and does not affect the operation of the phone. Take the phone to a warmer place and try again. In other cases please contact your phone supplier.

Your battery seems to over heat

You might be using a charger that was not intended for use with your phone. Make sure you always use the Philips authentic accessory shipped with your phone.

Your phone doesn't display the phone numbers of incoming calls

This feature is network and subscription dependent. If the network doesn't send the caller's number, the phone will display Call 1 or Withheld instead. Contact your operator for detailed information on this subject.

You can't send text messages

Some networks don't allow message exchanges with other networks. First check that you have entered the number of your SMS centre, or contact your operator for detailed information on this subject.

You can't receive and/or store JPEG pictures

A picture may not be accepted by your mobile phone if it is too large, if its name is too long, or if it doesn't have the correct file format.

You feel that you have missed some calls

Check your call divert options.

When charging, the battery icon shows no bar and the outline is flashing

Only charge the battery in an environment where the temperature does not go below 0°C (32°F) or above 50°C (113°F).

In other cases please contact your phone supplier.

The display shows SIM failure

Check that the SIM card has been inserted correctly. If the problem persists, your SIM card may be damaged. Contact your operator.

When attempting to use a feature in the menu, the display shows NOT ALLOWED

Some features are network dependent. They are only available, therefore, if the network or your subscription supports them. Contact your operator for detailed information on this subject.

The display shows INSERT YOUR SIM CARD

Check that the SIM card has been inserted correctly. If the problem persists, your SIM card may be damaged. Contact your operator.

The autonomy of your phone seems lower than indicated on the user guide

The autonomy is linked to your settings (e.g., ringer volume, backlight duration) and the features you use. To increase the autonomy, and whenever possible, you must deactivate features you do not use.

Your phone doesn't work well in your car

A car contains many metallic parts that absorb electromagnetic waves which can affect the phone's performance. A car kit is available to provide you with an external antenna and enables you to make and receive phone calls without handling the handset.

Note:

- Check with the local authorities whether or not you are allowed to use the phone while driving.

Your phone is not charging

If the battery is completely flat, it might take several minutes of pre-charge (up to 5 minutes in some cases) before the charging icon is displayed on the screen.

The picture captured with the phone camera is not clear

Make sure that the camera lens on both sides is clean.

Trademark Declaration

Android	Android is a trademark of Google, Inc.
Bluetooth™	Bluetooth™ is a trade-mark owned by telefonaktiebolaget L M Ericsson, Sweden and licensed to Philips.
Philips	PHILIPS and PHILIPS' Shield Emblem are registered trademarks of Koninklijke Philips N.V. manufactured by Shenzhen Sang Fei Consumer Communications Co., Ltd. Under license from Koninklijke Philips N.V..

FCC Compliance

This device complies with part 15 of the FCC Rules. Operation is subject to the condition that this device does not cause harmful interference. This device must accept any interference received, including interference that may cause undesired operation.
Caution: Changes or modifications not expressly approved by the manufacturer could void the user's authority to operate the equipment.

Note: This equipment has been tested and found to comply with the limits for a Class B digital device, pursuant to part 15 of the FCC Rules. These limits are designed to provide reasonable protection against harmful interference in a residential installation. This equipment generates, uses and can radiate radio frequency energy and, if not installed and used in accordance with the instructions, may cause harmful interference to radio communications. However, there is no guarantee that interference will not occur in a particular installation. If this equipment does cause harmful interference to radio or television reception, which can be determined by turning the equipment off and on, the user is encouraged to try to correct the interference by one or more of the following measures:
—Reorient or relocate the receiving antenna.
—Increase the separation between the equipment and receiver.
—Connect the equipment into an outlet on a circuit different from that to which the receiver is connected.
—Consult the dealer or an experienced radio/ TV technician for help.

Radio Frequ+ency (RF) Energy

This model phone meets the government's requirements for exposure to radio waves.
This phone is designed and manufactured not to exceed the emission limits for exposure to radio frequency (RF) energy set by the Federal Communications Commission of the U.S. Government:
The exposure standard for wireless mobile phones employs a unit of measurement known as the Specific Absorption Rate, or SAR. The SAR limit set by the FCC is 1.6W/kg. Tests for SAR are conducted using standard operating positions accepted by the FCC with the phone transmitting at its highest certified power level in all tested frequency bands. Although the SAR is determined at the highest certified power level, the actual SAR level of the phone while operating can be well below the maximum value. This is because the phone is designed to operate at multiple power levels so as to use only the poser required to reach the network. In general, the closer you are to a wireless base station antenna, the lower the power output.

The highest SAR value for the model phone as reported to the FCC when tested for use at the ear is 0.82 W/kg and when worn on the body, as described in this user guide, is 1.23 W/kg (Body-worn measurements differ among phone models, depending upon available enhancements and FCC requirements).

While there may be differences between the SAR levels of various phones and at various positions, they all meet the government requirement.

The FCC has granted an Equipment Authorization for this model phone with all reported SAR levels evaluated as in compliance with the FCC RF exposure guidelines. SAR information on this model phone is on file with the FCC and can be found under the Display Grant section of http://www.fcc.gov/oet/fccid after searching on

FCC ID: VQRCTV387

For body worn operation, this phone has been tested and meets the FCC RF exposure guidelines for use with an accessory that contains no metal and the positions the handset a minimum of 0 cm from the body. Use of other enhancements may not ensure compliance with FCC RF exposure guidelines. If you do not use a body-worn accessory and are not holding the phone at the ear, position the handset a minimum of 1.0 cm from your body when the phone is switched on.