Appendix K: Manual

Please refer to the following pages.

M100 Aperio
Mortise Lock Series
Installation Instructions

Package Contents

Medeco M100		
ITEM	QTY	DESCRIPTION
1	1	CYLINDER
2	1	CONTROL UNIT
3	1	COVER
INSTALLATION KIT		
4	1	SPACER, THICK
5	1	SPACER, THIN
6	1	MOUNTING PLATE
7	1	LOCKING NUT
8	1	LOCKING NUT TOOL
9	1	MOUNTING SCREWS
10	1	ALLEN WRENCH
11	1	BATTERY, CR-2
12	1	COVER SCREW
13	1	SET SCREW
14	1	THUMBTURN
	Cams Included (not shown)	
	1	YALE, CT-Z01
	1	ADAMS RITE, CT-Z02
	1	SCHLAGE, CT-Z34
	1	CORBIN, CT-Z00
	1	SARGENT, CT-Z20
HUB		
15	1	Aperio Hub
16	1	Mounting Bracket
Mounting hardware (not shown)		
Package	2	Screw Caps
	2	2-56x1 1/4" screw
	2	6-32x1 1/4" screw
	2	2-56x3/8" screw

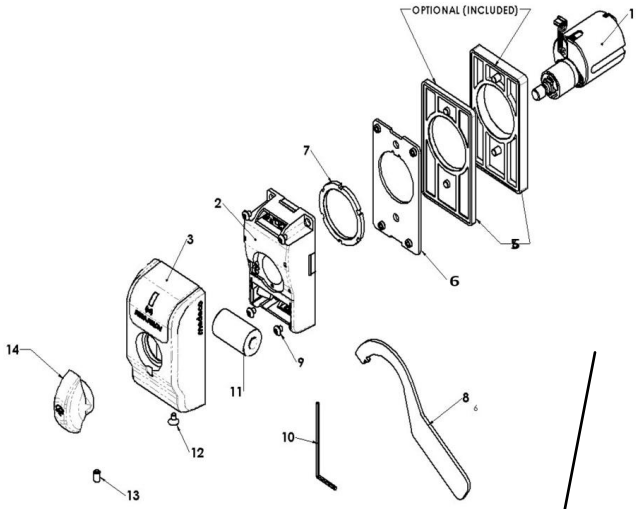

Hub Mounting Bracket and Hardware

(Hardware not shown)

Aperio Hub

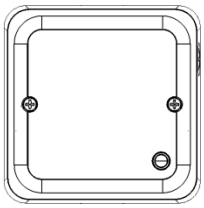

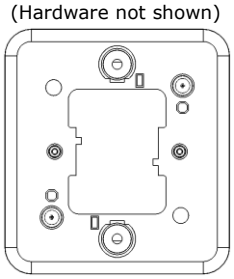

Additional Tools Needed

Approved Credential:

HID iCLASS ID Credential

Flathead drivers 3/32”, 3/16”

#2 Phillips Driver

Pencil, Wire Stripper

Options not included:

Gang box to mount hub

Product Specifications

Wireless Frequency: 2.4 GHz, IEEE 802.15.4, using AES 128bit encryption
Hub Power Requirement: 8-24VDC, 250mA
Lock Battery Type: CR2, providing 30,000 Cycles
Operating Temperature: -10C to 50C
FCC Part 15, Class B Compliant
Credentials Supported: 13.56MHz iCLASS credentials are supported

Scan the QR code with your Smartphone wherever you see this symbol to view our How-To videos

For technical support please call 1-800-810-WIRE (9473)

System Overview

The M100 wireless mortise lock extends access control to an office door, stockroom door or any other door requiring additional accountability without the complexity and expense of running wires to the opening. The M100 lock connects to an access control system through the included communication hub. The communication hub connects to the access control system with wiegand wiring typical of a wiegand reader.

When a credential card is presented to the reader on the lock the request for access is sent wirelessly to the communication hub. The communication hub then communicates through wiegand wiring to the access control system where the decision is made to grant or deny access.

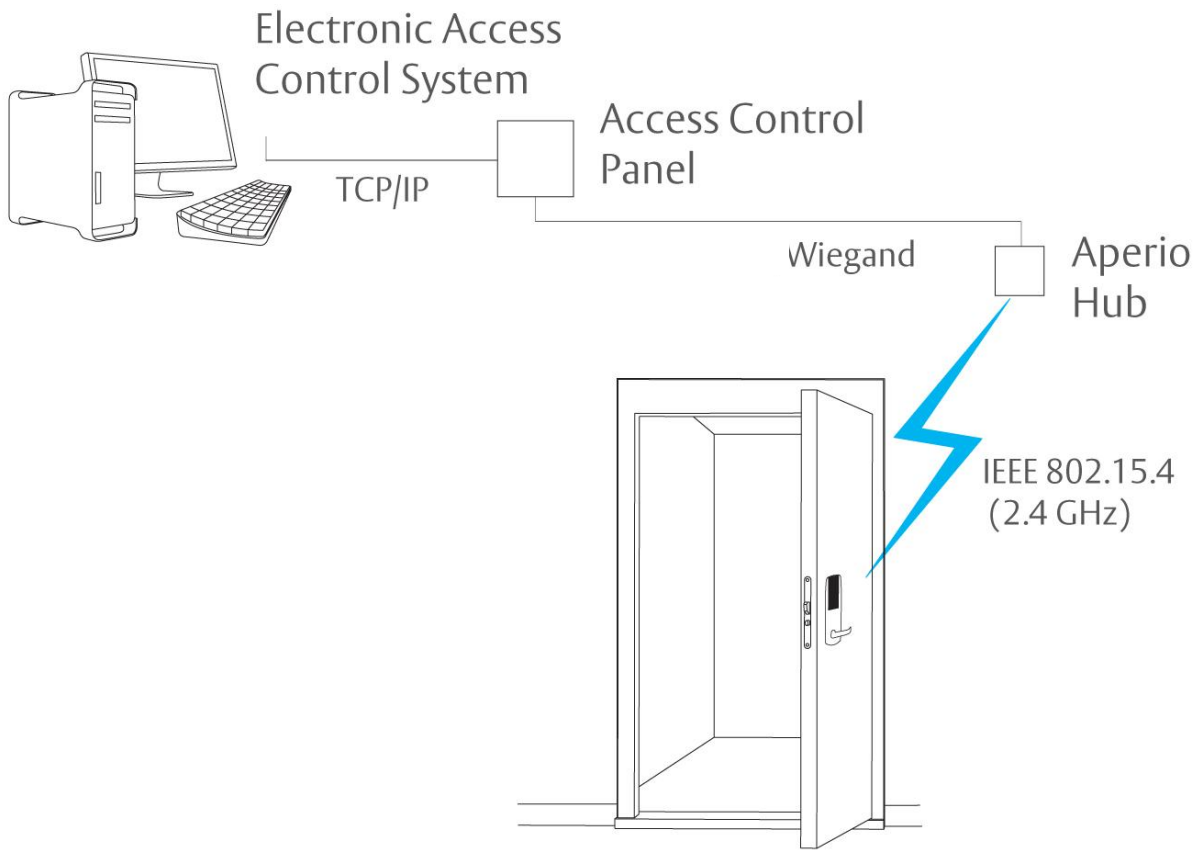

Installation Steps

A. Locate and Mount the Hub

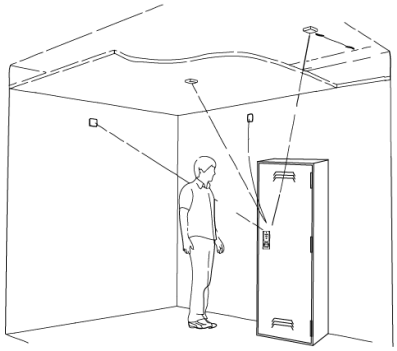

B. Connect the Hub

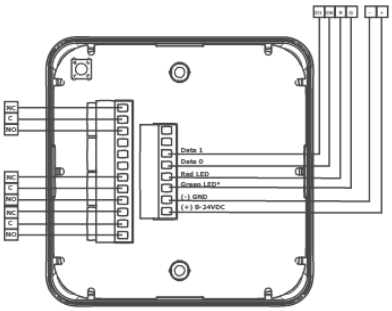

C. Test the Lock

D. Install the Lock

A. 1 - Choose the hub location

It is recommended that the hub be mounted near the top of a wall, on the ceiling or above the ceiling to reduce potential for interference.

For a stable and reliable radio link, it is recommended that the hub is located within forty-five (45) feet of the lock. A maximum of two interior walls between the hub and lock is recommended

Recommended locations:

A: Wall Mount

B: Ceiling Mount

C: Inside Ceiling Mount

D: Wall Mount, Adjacent Room

A.2 - Mounting the Hub.

The included adapter plate can be used to mount the hub on a single or double gang box.

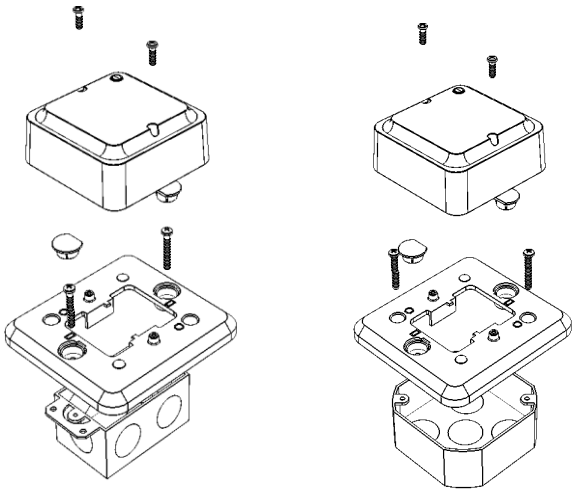

B. Wiring the Hub.

The Aperio Hub connects to the Access Control system via Wiegand wiring. The hub requires 8-24VDC power (250mA). The hub includes three form C relays that can be used to transmit Lock jamb status, low battery signal and a tamper signal. The hub connects to the mortise lock wirelessly.

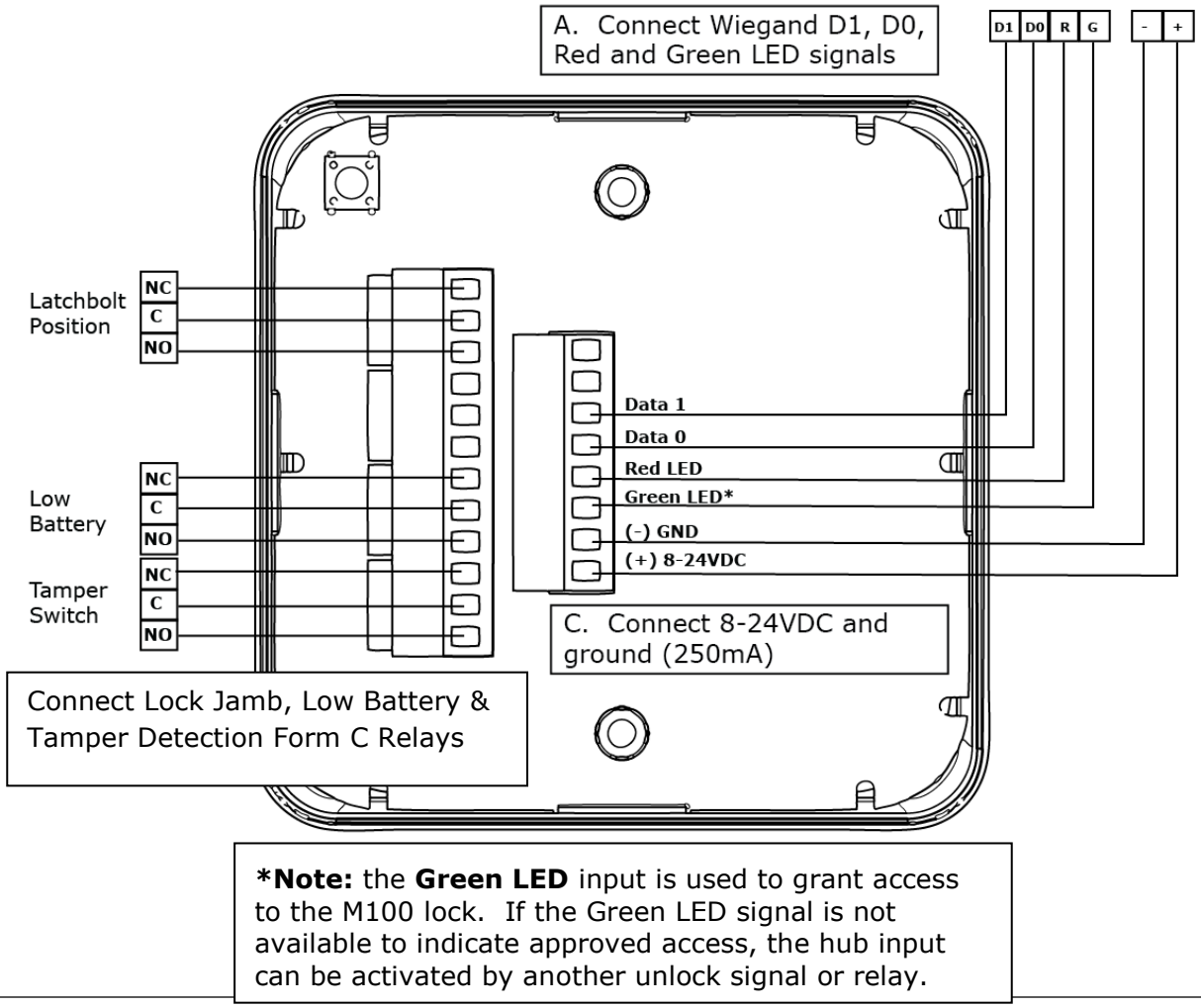

***Note:** the **Green LED** input is used to grant access to the M100 lock. If the Green LED signal is not available to indicate approved access, the hub input can be activated by another unlock signal or relay.

C. Testing the Lock with the Access Control System

With the hub connected to power and the access control system, test the lock with a known good credential to confirm it will open as desired when installed.

D. Mounting the Lock

Before You Begin please verify the following:

- **You have the proper Cam for the door hardware being used**
- **Verify the rotation of the lock matches the hardware on the door**

Step 1: The M100 installs in a similar fashion to a mechanical mortise lock, and requires the same adjustments to function properly with the mortise hardware. The following steps outline the mechanical installation only.

Removal of Existing Cylinder

a) Remove the door-edge trim by removing the retaining screws and gently prying the trim plate loose (Fig. 1).
b) Loosen the cylinder clamp screw far enough to allow the existing cylinder to be removed (Fig. 2).
c) Using a key partially inserted, rotate the mortise cylinder counter-clockwise to remove it. Also remove any trim rings if they are used (Fig. 3).

Fig. 1

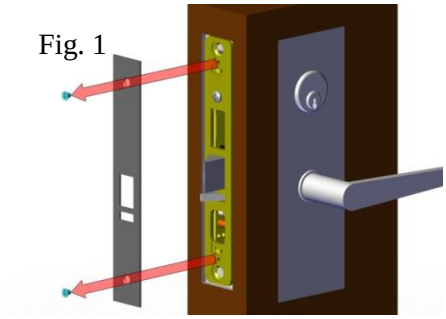

Fig. 2

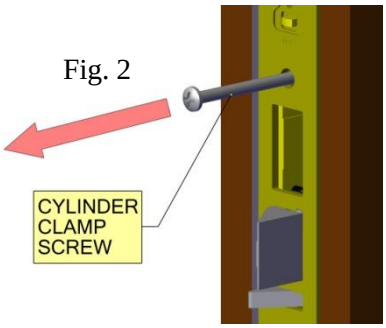

Fig. 3

Step 2: Verify that the cam on the M100 is the same style as was on the cylinder that was just removed. If the removed cylinder is a **Medeco** brand, the cam can be interchanged onto the M100 (Fig. 4).

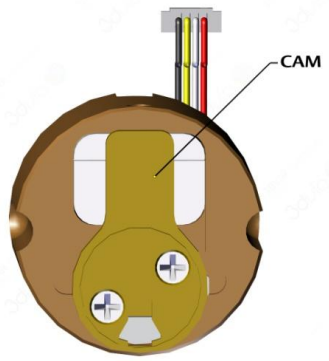

Fig. 4

Screw the M100 into the cylinder mounting hole on the mortise hardware (Fig. 5). It is important to not over tighten, or to keep too loose on the door. The face of the M100 cylinder should stand proud of the escutcheon approximately 3/16"-1/4". Please also see (Fig. 12) before proceeding (Fig. 6).

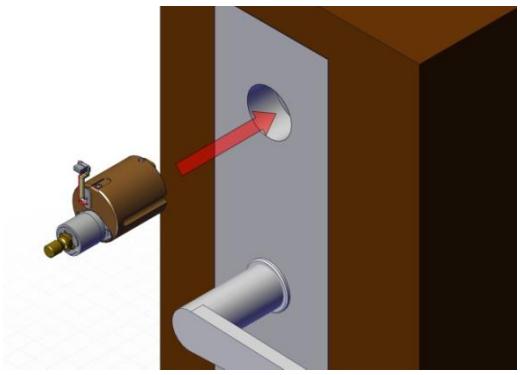

Fig. 5

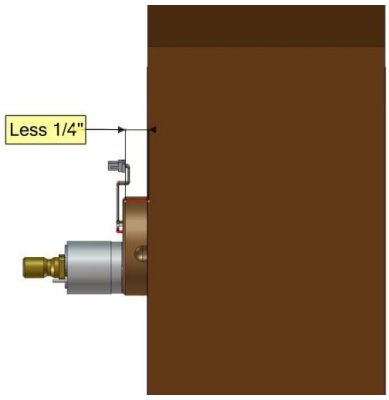

Fig. 6

Step 3: Re-tighten the cylinder clamp screw with the M100 in a vertical position. The screw should engage tightly in the slot along the edge of the cylinder so the cylinder cannot rotate (Fig. 7).

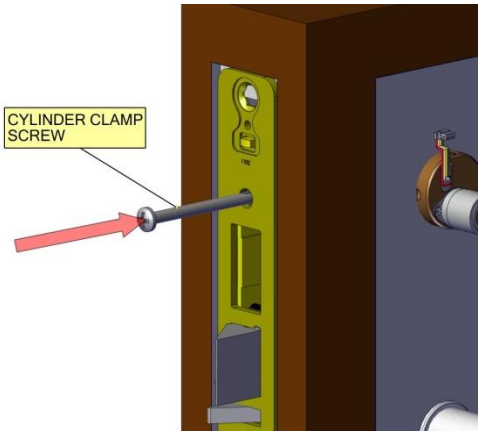

Fig. 7

Step 4: Add back plate and locking nut (Fig. 8). **Warning:** Wire harness goes through plate (Fig. 9).

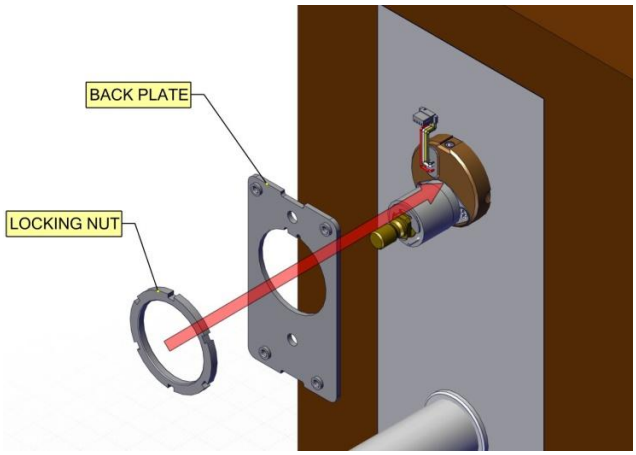

Fig. 8

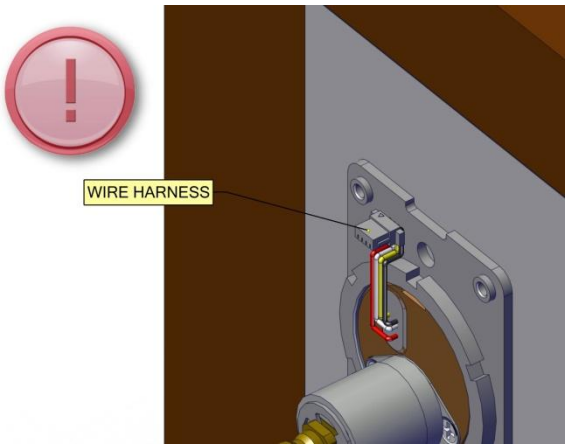

Fig. 9

Tighten with locking nut tool (Fig. 10). **Warning:** Only one or two threads should be visible for proper operation (Fig. 11).

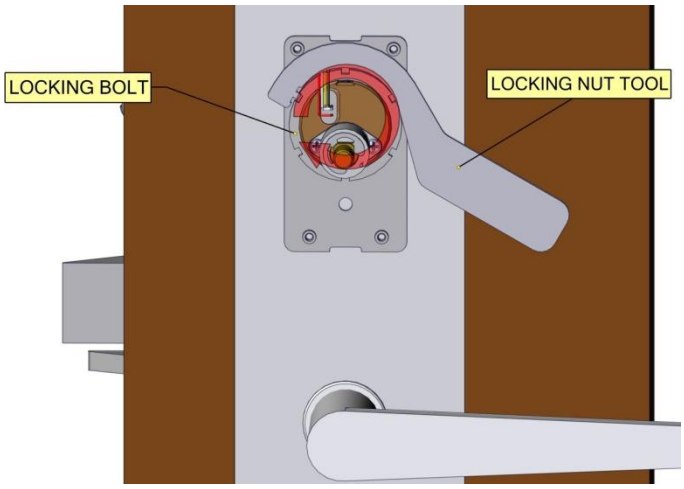

Fig. 10

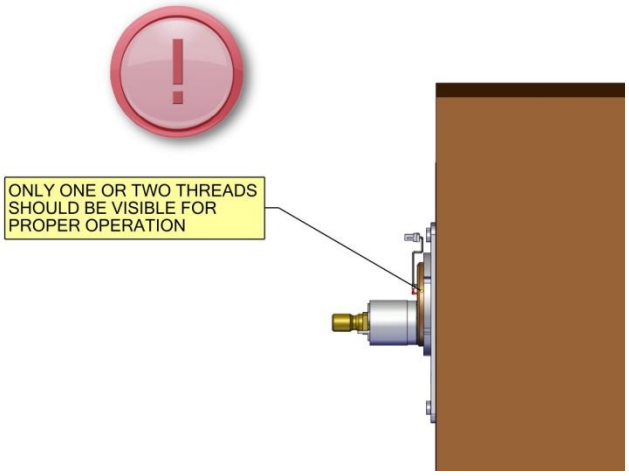

Fig. 11

Step 5: Connect control unit to wire harness and install 4 mounting screws (Fig. 12 and Fig. 13).
Warning: Avoid pinching wire harness when mounting the control unit.

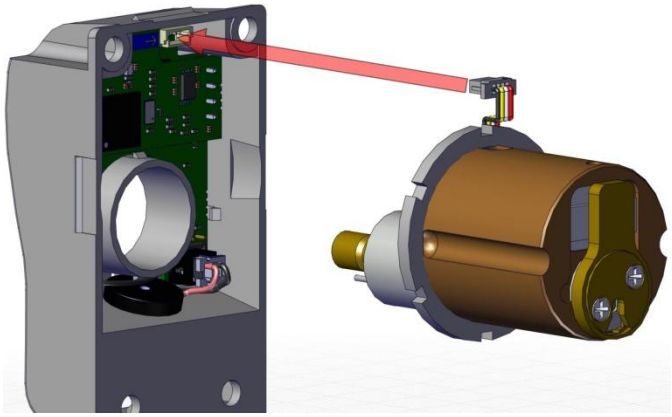

Fig. 12

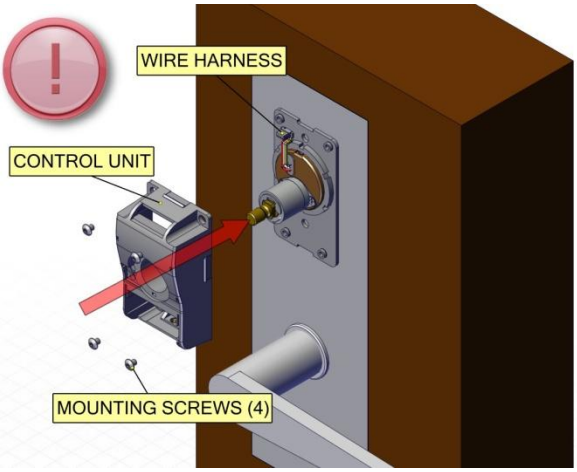

Fig. 13

Step 6: Install Battery. Please verify the battery is inserted in the correct polarity position. Always use new batteries installed with correct polarity (Fig. 14 and 15).

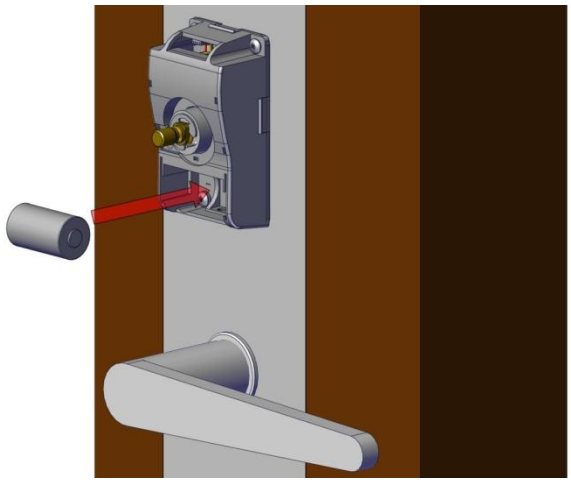

Fig. 14

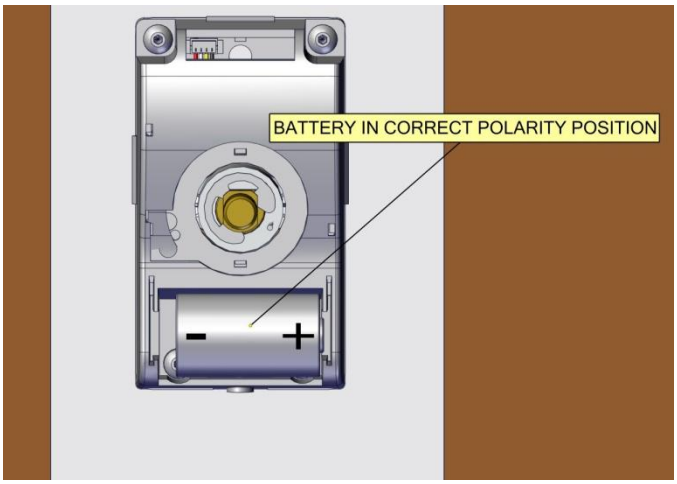

Fig. 15

Step 7: Install cover assembly (Fig. 16) and cover screw (Fig. 17).

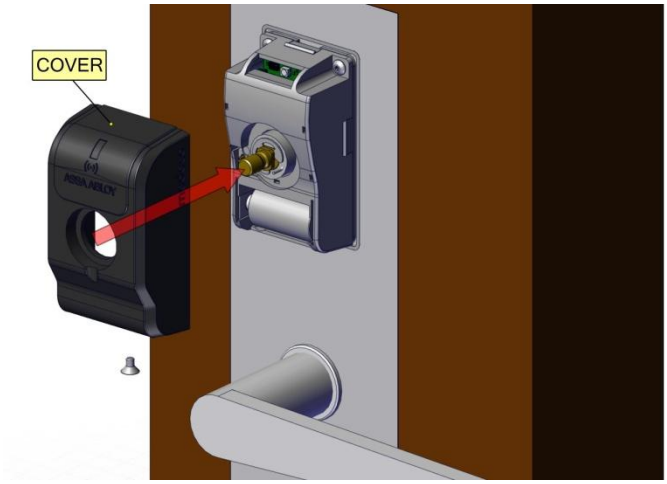

Fig. 16

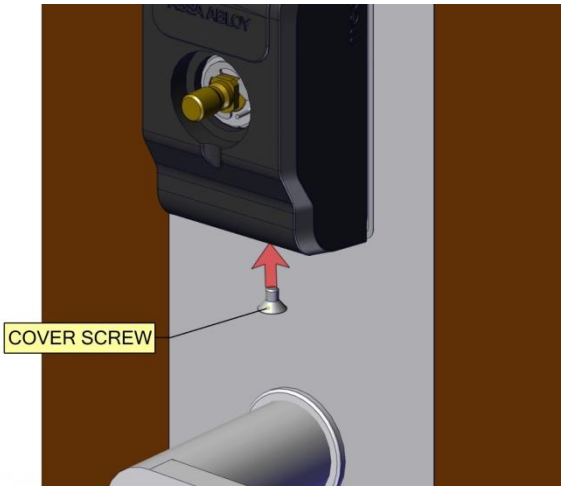

Fig. 17

Step 8: Install thumbturn (Fig. 18), set screw (Fig. 19), and re-install door edge trim (Fig. 20).

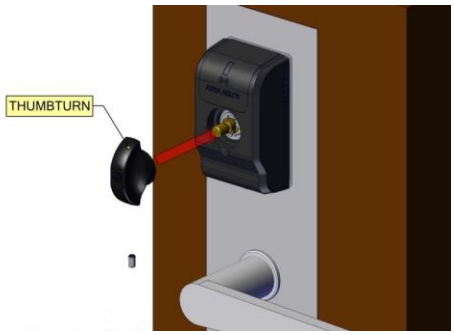

Fig. 18

Fig. 19

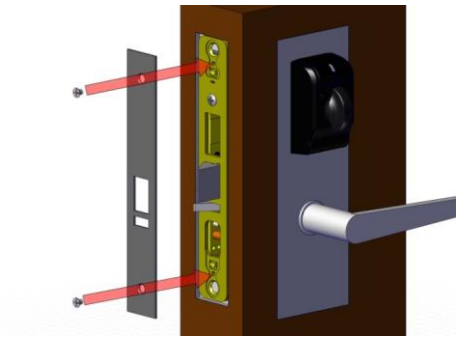

Fig. 20

Warning:

FCC Statement

This device complies with Part 15 of the FCC Rules. Operation is subject to the following two conditions:

1. This device may not cause harmful interference, and
2. This device must accept any interference received, including interference that may cause undesired operation.

Changes or modifications not expressly approved by the manufacturer could void the user's authority to operate
this equipment.

This device complies with Industry Canada license-exempt RSS standard(s). Operation is subject to the following two conditions: (1) this device may not cause interference, and (2) this device must accept any interference, including interference that may cause undesired operation of the device.

Le présent appareil est conforme aux CNR d'Industrie Canada applicables aux appareils radio exempts de licence. L'exploitation est autorisée aux deux conditions suivantes : (1) l'appareil ne doit pas produire de brouillage, et (2) l'utilisateur de l'appareil doit accepter tout brouillage radioélectrique subi, même si le brouillage est susceptible d'en compromettre le fonctionnement.

Tips and Trouble Shooting

Thumbturn drags on cover.

Thumbturn is not out far enough refer to Step 4, Fig. 12.

The cover does not sit flush on plate.

Cylinder is protruding out to far (included are optional spacers for proper spacing of cylinders) refer to Step 4, Fig. 12.

For Technical Support please call 1-800-810-WIRE (9473)