USERS MANUAL

Tron 40VDR

Float Free Emergency Transmitter with VDR

www.jotron.com

MANUAL OPERATION AND ACTIVATION

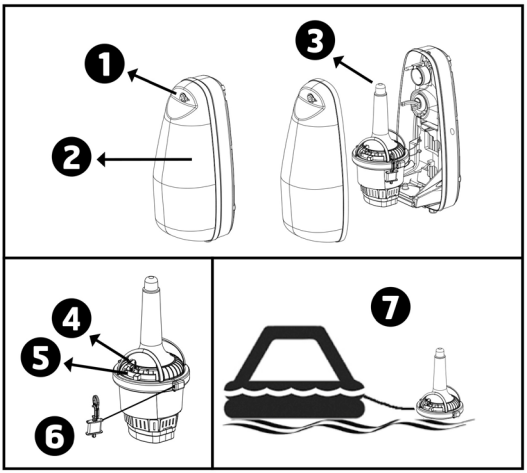

It is not recommended to operate the beacon inside a life raft or under a cover or canopy. Do NOT tie the lanyard to the ship in distress, as this will prevent the unit to functioning if the ship sinks.

1. Remove the locking pin from bracket cover
2. Remove the cover
3. Take out the EPIRB from the bracket
4. Break the seal and pull the locking pin holding the main activator switch
5. Push slider to move switch to ON position (the switch is spring-loaded and will automatically go to the ON position)
6. Tie the beacon lanyard to you or to the survival craft
7. The strobe light, located at the top of the EPIRB, will start flashing indicating that the EPIRB is operating

If possible keep the EPIRB in an open area, away from any metal objects (ship construction etc.) that may limit the satellite coverage. Transmission can be stopped by turning the switch to READY position and take it out of the water.

EC Declaration of Conformity, available at www.jotron.com

IMPORTANT

The information in this book has been carefully checked and is believed to be accurate. However, no responsibility is assumed for inaccuracies.

This equipment contains CMOS integrated circuits. Observe handling precautions to avoid static discharges which may damage these devices. Jotron AS reserves the right to make changes without further notice to any products or modules described herein to improve reliability, function or design. Jotron AS does not assume any liability arising out of the application or use of the described product.

WARNING / IMPORTANT

Jotron AS is a prime manufacturer of safety equipment designed for rescue of human lives and their property. For safety equipment to be effective in line with the design parameters it is important that they are handled, stowed and maintained in compliance with the manufacturers instructions. Jotron AS can not be held responsible for any damage caused due to incorrect use of the equipment or breach of laid down procedures or for failure of any specific component or other parts of the equipment.

The chapter covering battery replacement is added for information only. Jotron AS does not take any responsibility for improper disassembling/assembling of the beacon. We strongly recommend all service to be done by authorized Jotron AS agents. In addition to normal service, Jotron AS agents have the necessary equipment and education to test the operational functions of the beacon. Non-original maintenance and/or service parts may destroy the equipment function and performance.

WARRANTY AND LIMITATION.

This product is warranted against factory defects in material and workmanship for a period of 5 years from date of purchase. During the warranty period Jotron AS will repair or, at its option, replace the unit at no cost to you for labour, materials and return transportation from Jotron AS or its subsidiaries.

For further assistance, please contact repair@jotron.com

This warranty does not apply if the product has been damaged by accident or misuse, or as a result of service or modification performed by an unauthorized factory or person. The Company shall not be liable for consequential or special damages.

COUNTERFEIT SPARE PARTS.

Jotron AS is aware of extended counterfeit spare parts being marketed and sold to fit GMDSS safety products. It is of extreme importance that any spare parts being fitted to this product are original spare parts, manufactured or approved by Jotron AS. Any use of counterfeit spare parts will deviate from the product type-approval certificates.

PRODUCT RECYCLING AND DISPOSAL

Tron 40VDR Float Free Capsule can be recycled according to EC Directive WEEE, except for the battery-module. The battery-module consists of Lithium batteries and must be handled acc to local regulations concerning primary Lithium battery guidance.

JOTRON
BEACON
DECAL
HERE

INNHOLD

1	**GENERAL DESCRIPTION**		**8**
	1.1	TRON 40VDR	8
	1.2	SYSTEM DESCRIPTION	9
		1.2.1 SIGNAL DETECTION	9
		1.2.2 DISTRESS LOCATION DETERMINATION	10
		1.2.3 GPS ADVANTAGE	10
		1.2.4 EPIRB REGISTRATION	11
2	**TECHNICAL SPECIFICATIONS**		**14**
	2.1	GENERAL	14
	2.2	COSPAS-SARSAT TRANSMITTER	14
	2.3	NAVIGATION DEVICE	14
	2.4	HOMING TRANSMITTER	15
	2.5	BRACKETS	15
	2.6	BATTERY SAFETY DATA SHEET	15
		2.6.1 HAZARDS IDENTIFICATION	15
		2.6.2 FIRST AID MEASURES	16
		2.6.3 FIRE FIGHTING MEASURES	16
		2.6.4 HANDLING AND STORAGE	17
3	**EPIRB DESCRIPTION**		**18**
	3.1	GENERAL	18
	3.2	BATTERY MODULE	19
	3.3	FLOAT FREE BRACKET	19
4	**INSTALLATION OF TRON 40VDR FLOAT FREE CAPSULE**		**20**
	4.1	FB-40 BRACKET INSTALLATION AND MOUNTING	20
	4.2	HOW TO FIT TRON 40VDR CAPSULE IN THE BRACKET	21
5	**OPERATION INSTRUCTIONS**		**22**
	5.1	MANUAL OPERATION	22
		5.1.1 OUT OF BRACKET	23
		5.1.2 IN THE FLOAT FREE BRACKET FB-40	23
	5.2	AUTOMATIC OPERATION - FLOAT FREE BRACKET FB-40	24
6	**TESTING AND PERIODICAL CONTROL**		**25**
	6.1	TESTING	25
		6.1.1 NORMAL SELF-TEST	25
		6.1.2 EXTENDED SELF-TEST INCLUDING GPS-TEST	25
		6.1.3 EPIRB ERROR MESSAGES	26
	6.2	PERIODICAL CONTROL	27

6.2.1 EVERY MONTH: 27
6.2.2 EVERY 12TH MONTH: 27
6.2.3 EVERY 2ND YEAR: 28
6.2.4 EVERY 4th OR 5th YEAR: 28
6.2.5 EVERY 10th YEAR: 28
6.3 TEST AND MAINTENANCE RECORD 28
6.4 FALSE ALERT 29
6.5 SERVICE PROCEDURE 30
6.5.1 WARRANTY CLAIM 30
6.5.2 SERVICE – NOT WARRANTY CLAIM 30
7 MAINTENANCE 31
7.1 EPIRB MODULE / BATTERY PACK 31
7.1.1 CHANGE OF BATTERY 31
7.2 HYDROSTATIC RELEASE REPLACEMENT 32
7.2.1 REPLACING THE RELEASE MECHANISM IN FB-40 BRACKET 32
8 SPARE PARTS 34
8.1 Tron 40VDR SPARE PARTS 34
8.2 COUNTERFEIT SPARE PARTS. 34
9 SERVICE AGENTS 35
10 ABBREVIATIONS AND DEFINITIONS 36
11 AMENDMENT RECORDS 38

1 GENERAL DESCRIPTION

The Tron 40VDR is emergency equipment consisting of:

- Tron 40VDR Cospas-Sarsat emergency EPIRB.
- FB-40 - Automatic float free bracket.
- VDR storage module.

The Tron 40VDR EPIRB is developed to meet the regulations and rules for use on vessels and life rafts in the maritime service. Tron 40VDR meets the following specifications for 406 MHz EPIRBs for use in search and rescue operations at sea.

See "Declaration of Conformity" document at www.Jotron.com for information of required standards.

1.1 TRON 40VDR

The Tron 40VDR is buoyant and have water activated contacts which will start DISTRESS transmission if deployed into water. Tron 40VDR are currently available with one float free bracket. The bracket prevents DISTRESS transmission if water spray are applied to the EPIRB.

The Float free bracket, FB-40 is a covered bracket with an hydrostatic release unit (HRU) which will release the Tron 40VDR if the bracket is submerged to a depth of 2-4 meters if the ship are about to sink.

The purpose of the Tron 40VDR is to give a primary alarm to the search and rescue authorities. The EPIRB gives an immediate alarm when activated, transmitting the ID of the ship in distress. Care must be taken not to activate the EPIRB unless in an emergency situation, in such cases the user will be held responsible. For periodic testing a test function is implemented. During the test cycle the EPIRB does a self-test on the transmitters and on the battery status. No emergency signal is transmitted during the self-test.

The battery of the EPIRB will last for at least 168 hours from activation of the EPIRB.

1.2 SYSTEM DESCRIPTION

The Cospas-Sarsat system was introduced in 1982 as a worldwide search and rescue system with the help of satellites covering the earth's surface. Since the introduction of the system more than 28000 persons have been rescued by the Cospas-Sarsat system (2009). Currently the system consists of 5 functional satellites in a polar orbit constellation, these satellites cover the entire earth's surface and receive the emergency signal from the 406 MHz transmitter within the Tron 40VDR, more polar orbiting satellites will be available in the future, giving a faster location and rescue time.

In addition several geostationary satellites are equipped with a 406 MHz transponder, these satellites are not able to locate the Tron 40VDR but will give an early warning to the rescue forces, minimising the time from an emergency occurs till the rescue forces are at the site.

Each emergency EPIRB in the system is programmed with its own unique code, therefore it is vital that the ships data that is given to the dealer you obtained your Tron 40VDR, is correct. It is also important that your EPIRB is registered in the database for each country. This database is normally located in the same country that the ship is registered.

1.2.1 SIGNAL DETECTION

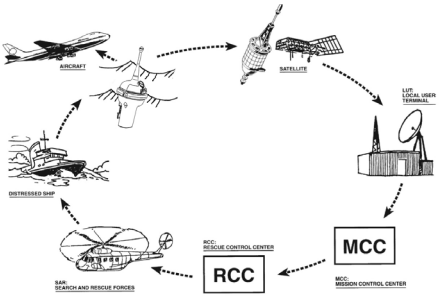

When the Tron 40VDR is activated (manually or automatically) it transmits on the frequencies 121.5 MHz and 406.037 MHz. An analogue signal is emitted on 121.5 MHz and a digital signal is transmitted on 406.037 MHz. After the Tron 40VDR is activated, the next passing satellite will detect the transmitted signal and relay it to an antenna at a ground station, called LUT.

The International Cospas-Sarsat System has ceased satellite processing of 121.5/243 MHz beacons from 1 February 2009.

1.2.2 DISTRESS LOCATION DETERMINATION

The location of the distress signal is determined by taking measurements of the doppler shift of the EPIRB frequency when the satellite first approach and then pass the EPIRB.

The actual frequency is heard at the time of closest approach (TCA). Knowing the position of the satellite and using the received doppler signal information, it is possible to determine the location of the Tron 40VDR from the satellite at the TCA. At the LUT, actually two positions are calculated. One is the actual position (A) and the other is the mirror image (B) position. A second satellite pass confirms the correct location (A). Doppler-only accuracy is within 5 km (3 mi) (3.1 statute miles or 2.6 nautical miles)— that is, the position is sufficiently accurate for SAR purposes even after only one pass. What's more, the most likely of the two 'mirror' positions can be determined valid with 98.5% accuracy after only one satellite pass. This accuracy can be increased to 99.3% using so-called "combined Leo-Geo processing," and this technique also enables accurate positions to be generated with as little as two or three bursts from the beacon (i.e. less than 4 minutes of transmission) and thus greatly increases the chances of being found even if the beacon is ultimately consumed by fire or is otherwise destroyed

1.2.3 GPS ADVANTAGE

Tron 40VDR has been designed to operate with the Cospas-Sarsat system and will enhance further the lifesaving capabilities of conventional beacons.
Please see picture on next page for comparison between Tron 40VDR and EPIRB without GPS depending on detection by polar orbiting or geostationary satellites.

GPS position is updated every 6-16 minutes, and can also be tested in SELF-TEST.

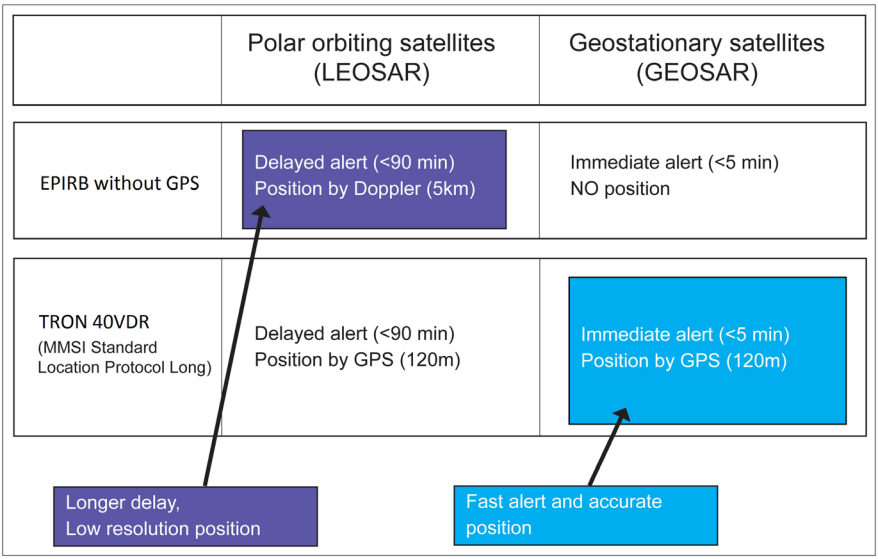

1.2.4 EPIRB REGISTRATION

Normally the MCC will contact the vessel or the contact person registered in a shipping register and/or an EPIRB register (Ships owner, family member etc.) before alerting the RCC. This is to determine if the alarm from the EPIRB for some reason is a false alarm, and an expensive rescue operation can be avoided. Because of this it is important that the ships data is correct in the shipping register or in the EPIRB database.

You should register your beacon with the national authority associated with the country code in the hexadecimal identification (15 Hex ID) of your beacon. You can register your beacon online with the Cospas-Sarsat IBRD if your country does not provide a registration facility and your country has allowed direct registration in the IBRD: www.406registration.com

If your country operates a national beacon registry, consult the document C/S S.007 "Cospas-Sarsat Handbook of Beacon Regulations" available at www.cospas-sarsat.org to obtain the point of contact.

Some EPIRB registration links:
USA: http://www.beaconregistration.noaa.gov
UK: http://www.mcga.gov.uk (search for "EPIRB registration")

USA REGISTRATION CARD
For registration of the beacon, use this link:
http://www.beaconregistration.noaa.gov

Follow instructions you see on your screen.

Other registrations methods are mail or fax. Forms are ready with correct information and it may be downloaded from the above web site.

The Emergency Contact information has to be accurate, especially regarding the telephone number, as this will be used to validate an alert. Only if the beacon registration and approximate location details can be confirmed will USCG (United States Coast Guard) launch an immediate rescue, otherwise there will be a delay whilst further alerts from the same source are received and verified.

Registration address:
SARSAT BEACON REGISTRATION
NOAA
NSOF, E/SP053
1315 East West Hwy
Silver Spring, MD 20910

Tron 40VDR
PUSH
Manual Operating
WARRANTY VOID IF SEAL IS BROKEN
JOTRON
Tron 40VDR
Docking Module 87921
Power
On
Link
Data

2 TECHNICAL SPECIFICATIONS

2.1 GENERAL

Battery:	Primary Lithium-Thionyl Chloride, 7.2V/ 18Ah, 5 years service life
Housing material:	Glass reinforced Polycarbonate
Dimensions:	
• Weight:	1.9 kg
• Height:	400 mm
• Max diameter:	200 mm
Compass safe distance:	0,8 m
Temperature operating:	-20°C to + 55°C (-4°F to +131°F)
Temperature storage:	-40°C to + 65°C (-22°F to +149°F)
Operating life:	Minimum 168 hours at -20°C

2.2 COSPAS-SARSAT TRANSMITTER

Frequency:	406.037 MHz ± 2 ppm
Output power:	5W ± 2 dB
Protocols:	Tron 40VDR: Maritime, Serialized, Radio Call sign, Location protocols
Modulation:	Phase modulation 1.1 ± 0.1 rad
Data encoding:	Bi Phase L
Stability:	Short term: ≤ 2 x10e-9
	Medium term: ≤ 0e-9
	Residual noise: ≤ 3 x10e-9
	Bit rate: 400 b/s
	Antenna: Built in, omnidirectional

2.3 NAVIGATION DEVICE

Type:	22 Channel GPS Receiver
Antenna:	Chip type

2.4 HOMING TRANSMITTER

Frequency:	121.500 MHz
Output power:	Up to 100 mW
Modulation:	A9, AM sweep tone between 300Hz and 1600Hz Sweep range: 700 Hz Sweep rate: 2.5 Hz
Stability:	10 ppm over temperature range
Antenna:	Built in, omnidirectional

2.5 BRACKETS

Materials:	Glass reinforced polycarbonate / Glass reinforced nylon
Dimensions (H/L/W):	215mm / 553mm / 236mm
Weight:	2.9 Kg
Release mechanism:	Jotron HRU kit (part. no. 86218)

2.6 BATTERY SAFETY DATA SHEET

PRODUCT NAME:	SAFT BATTERIES
TYPE NO.:	LSH 14 LIGHT
LITHIUM METAL CONTENT:	BELOW 1g/CELL
APPROXIMATE WEIGHT:	51g
CHEMICAL SYSTEM:	Primary lithium-thionyl chloride (Li-SOCl2)
DESIGNED FOR RECHARGE:	No

2.6.1 HAZARDS IDENTIFICATION

Do not short circuit, recharge, puncture, incinerate, crush, immerse, force discharge or expose to temperatures above the declared operating temperature range of the product. Risk of fire or explosion. The Lithium-Thionyl chloride batteries described in this Safety Data Sheet are sealed units which are not hazardous when used ac- cording to the recommendations of the manufacturer

Under normal conditions of use, the battery is hermetically sealed.

Ingestion:	Swallowing a battery can be harmful.
Inhalation:	Contents of an open battery can cause respiratory irrita tion.
Skin Contact:	Contents of an open battery can cause skin irritation.
Eye Contact:	Contents of an open battery can cause severe irritation.

2.6.2 FIRST AID MEASURES

Ingestion:	Do not induce vomiting or give food or drink. Seek medical attention immediately. CALL NATIONAL BATTERY INGESTION HOTLINE for advice and follow-up (202-625-3333) collect day or night.
Inhalation:	Provide fresh air and seek medical attention.
Skin Contact:	Remove contaminated clothing and wash skin with soap and water.
Eye Contact:	Immediately flush eyes thoroughly with water for at least 15 minutes, lifting upper and lower lids, until no evidence of the chemical remains. Seek medical attention.

Note: Carbon black is listed as a possible carcinogen by International Agency for Research on Cancer (IARC).

2.6.3 FIRE FIGHTING MEASURES

In case of fire where lithium batteries are present, flood area with water or smother with a Class D fire extinguishant appropriate for lithium metal, such as Lith-X. Water may not extinguish burning batteries but will cool the adjacent batteries and control the spread of fire. Burning batteries will burn themselves out. Virtually all fires involving lithium batteries can be controlled by flooding with water. However, the contents of the battery will react with water and form hydrogen gas. In a confined space, hydrogen gas can form an explosive mixture. In this situation, smothering agents are recommended. A smothering agent will extinguish burning lithium batteries.

Emergency Responders should wear self-contained breathing apparatus. Burning lithium-iron disulfide batteries produce toxic and corrosive lithium hydroxide fumes and sulfur dioxide gas.

2.6.4 HANDLING AND STORAGE

Storage: Store in a cool, well ventilated area. Elevated temperatures can result in shortened battery life. In locations that handle large quantities of lithium batteries, such as warehouses, lithium batteries should be isolated from unnecessary combustibles.

- WARNING:
Battery can explode or leak and cause burns if installed backwards, disassembled, charged, or exposed to water, fire or high temperature.

3 EPIRB DESCRIPTION

3.1 GENERAL

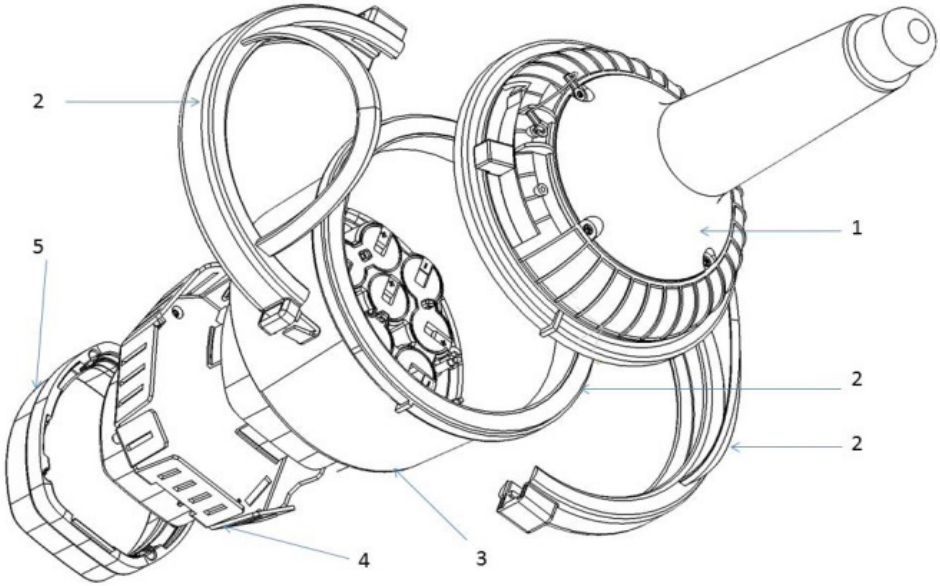

Tron 40VDR Float Free Capsule consists of upper and lower house mounted together with an equator ring. On the lower housing, the VDR storage module is fitted as a removable module, connected to the EPIRB through a clamp.

The EPIRB may be split into the following main parts when disposal:

1. EPIRB module with antenna
2. Equator ring and Gasket.
3. Battery-module.
4. VDR storage module.
5. VDR storage module sealing bracket.

3.2 BATTERY MODULE

The Battery module supplies the EPIRB module with power to keep the EPIRB transmitters active for 168 hours when activated, and for test sequences. The water detector is mounted in the battery module and can be seen as two metal contacts on the back of the battery housing. Pay attention not to touch both contacts while carying Tron 40VDR as this can be detected as water and activate the EPIRB.

3.3 FLOAT FREE BRACKET

The Float Free bracket, type FB-40, is an automatic bracket, were a hydrostatic release mechanism (HRU) releases the EPIRB from the bracket when reaching 2-5 mtr below sea-level.

The HRU is type approved by Jotron and special adjusted to the FB40 includes a special bolt with adjusted fittings. This module is supplied as a HRU-Kit.

The Tron 40VDR Float Free Capsule is activated automatically when immersed into water. There is a safety switch which prevents the water sensors from activating the beacon while placed in the mounting bracket.

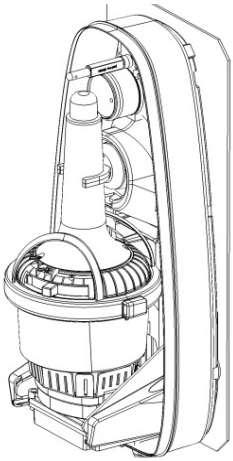

4 INSTALLATION OF TRON 40VDR FLOAT FREE CAPSULE

WARNING:

DO NOT INSTALL THE EPIRB NEAR STRONG MAGNETIC FIELDS THAT COULD ACTIVATE THE BEACON

4.1 FB-40 BRACKET INSTALLATION AND MOUNTING

The Tron 40VDR Float Free Capsule should be installed in a location guided by COMSAR.Circ 32 (Chap 4.10)

http://www.imo.org/blast/blastDataHelper.asp?data_id=10750&filename=32.pdf

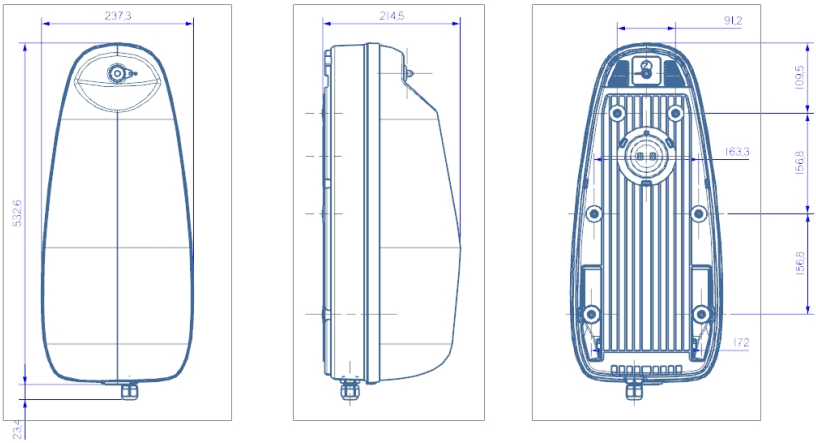

Installation of the FB-40 bracket can be made direct on the ship-wall, as long as the contact of the surface is plane and the areas is bigger than the actual bracket. The FB-40 needs firm ground contact on the grounding screw. Please ensure as short and wide grounding path as possible. Apply silicone grease on the screw before mounting to ensure good connection.

4.2 HOW TO FIT TRON 40VDR CAPSULE IN THE BRACKET

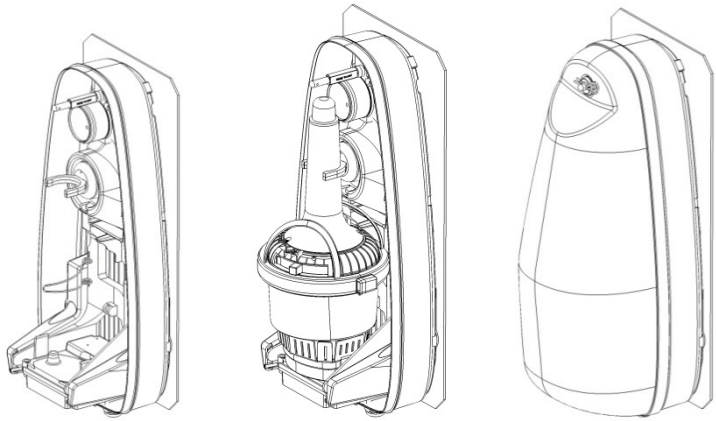

Make sure the FB-40 bracket is mounted correct on the rail and/or the ship-wall.Take the Tron 40VDR Float-Free Capsule and match the lower part correct on the dock-module and easy press/lay the unit safely in the stability-bracket. Mount the top-cover correct by fitting the lower-end first and then make sure the HRU (Hydro Static Release)-bolt is secured by the spacer and splint-pin. Pay attention to the notch on the cover. If the cover does not fit then it may help to compress it carefully on the sides. See illustration.

5 OPERATION INSTRUCTIONS

WARNING

- USE ONLY DURING SITUATIONS OF GRAVE AND IMMINENT DANGER
- REPLACE THE BATTERY AFTER THE SATELLITE EPIRB IS OPERATED FOR ANY PURPOSE OTHER THAN A TEST

Tron 40VDR is designed to be operated either manually or automatically.
The EPIRB is always armed when located in the bracket. The EPIRB will automatically start to transmit when removed or ejected from the bracket and deployed into water. The EPIRB has an internal safety switch which prevents inadvertent activation through moisture, sea spray etc when located in the bracket.

5.1 MANUAL OPERATION

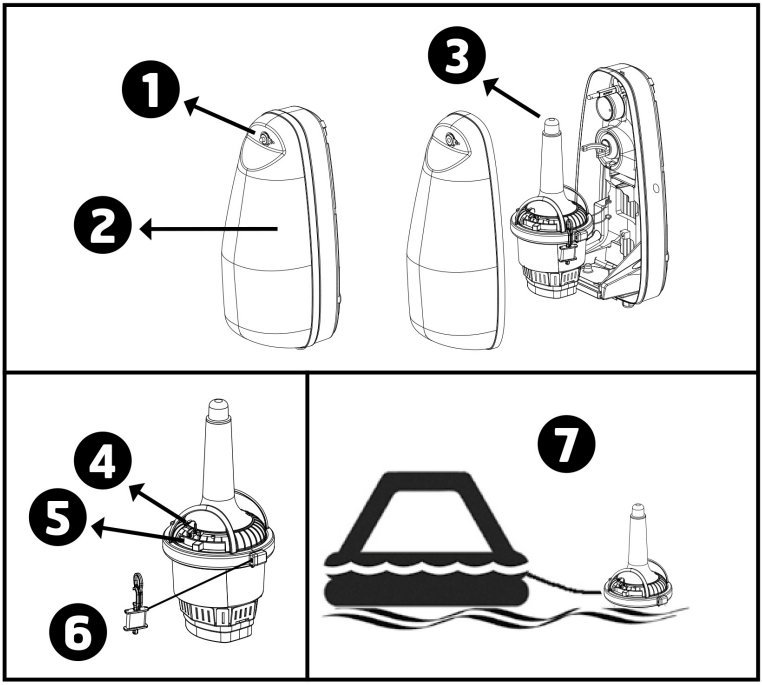

5.1.1 OUT OF BRACKET

For operation of the beacon out of the bracket follow instructions from 4-5 in chapter 5.1.2

5.1.2 IN THE FLOAT FREE BRACKET FB-40

For operation of the beacon in the bracket please follow instructions 1 to 7.

It is not recommended to operate the beacon inside a life raft or under a cover or canopy. Do NOT tie the lanyard to the ship in distress, as this will prevent the unit to functioning if the ship sinks.

1. Remove the cotter pin from the bracket (FB-40)
2. Remove the FB-40 cover
3. Take out the EPIRB from the bracket
4. Pull the locking pin holding the main switch.
5. Push and move main switch to the left, to ON position. The LED indicator, located at the top of the antenna, will start to flash, indicating that the EPIRB is operating.
6. Tie the beacon lanyard to you or to the survival craft
7. If possible keep the EPIRB in an open area, away from any metal objects (ship construction etc.) that may limit the satellite coverage. This is especially important for Tron 40VDR, since it needs good reception to obtain a GPS position.

NOTE: To stop transmission, take Tron 40VDR out of the water and move the main switch to READY position.

5.2 AUTOMATIC OPERATION - FLOAT FREE BRACKET FB-40

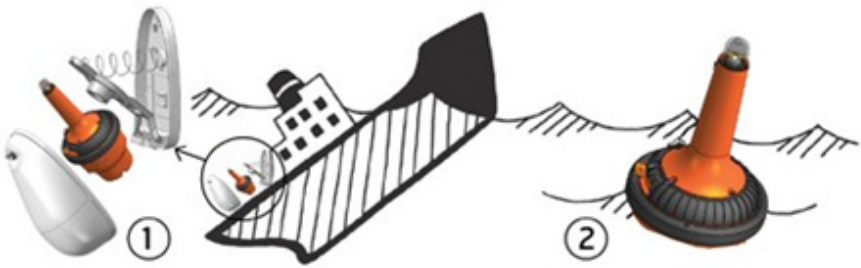

1. The Tron 40VDR will automatically release from the bracket, float to the surface and start to transmit when the EPIRB, in its bracket is deployed into water at a depth of app. 2-4 meters (6 - 13 feet).

2. Transmission will continue until the EPIRB is lifted out of the water, and dried off. The transmission can also be stopped by placing the EPIRB in the bracket.

6 TESTING AND PERIODICAL CONTROL

6.1 TESTING

There are two different kinds of tests that can be performed:

1. Normal self-test
2. Extended self-test including the GPS.

Jotron AS recommends the Tron 40VDR Float Free Capsule to be tested every month. This test involves both the self-test and GPS-test. Note: The extended self-test are imitated to 60 for a period of 5-year.

6.1.1 NORMAL SELF-TEST

To perform the self-test, the EPIRB has to be removed from the FB-40 bracket.

1. Release FB-40 top cover by removing the cotter pin.
2. Take Tron 40VDR out of the bracket.
3. Push and hold switch in TEST position for 15 seconds. Keep hands and other objects away from the antenna.
4. Test passed after one single flash only!
5. Release the switch and put the EPIRB back into the bracket

See Cha.p 6.1.3 below for error messages.

6.1.2 EXTENDED SELF-TEST INCLUDING GPS-TEST

To perform the extended self-test, the EPIRB has to be removed from the FB-40 bracket.

NOTE 1: The GPS-test might take up to 2 minutes to be successful. Limit this test to max. once/month as this test will reduce lifetime of EPIRB battery!

NOTE 2: This test include the self-test(Chap. 6.1.1) and therefore only one of them are necessary.

1. Release FB-40 top cover by removing the cotter pin.
2.Take Tron 40VDR out of the bracket.
3.Move Switch to TEST-position twice within 3 seconds and release back to READY-position
4. EPIRB will BEEP shortly every 3 seconds until GPS position acquired
5. OK = 2 BEEPS (see chap 6.1.3 if Not OK)
6. Normal SELF-TEST is performed after successful GPS TEST and position transmitted on 406.037 MHz. GPS position may also be received on an EPIRB Tester for verification

6.1.3 EPIRB ERROR MESSAGES

If the self test detects a fault in the EPIRB module, one or more of the following indications are shown:

Number of flashes:	Fault indication:
1	NONE
2	Low power on 406 MHz transmitter
3	Low battery voltage
4	Low power on 121.5 MHz transmitter
5	PLL on 406 MHz transmitter out of lock
6	PLL on 121.5 MHz transmitter out of lock
7	EPIRB module not programmed or programming not complete

GPS-test error messages:

a) 5 BEEPS = Did not acquire GPS position
b) 10 -" - = Number of GPS TEST above limit (>60)

6.2 PERIODICAL CONTROL

6.2.1 EVERY MONTH:

- Self-test (see chap. 6.1.1 and 6.1.2)
  What the self-test actually does is to send out a short test signal on 121,5 and 406,037MHz, testing the output of the transmitter. While transmitting the test signal, the battery voltage, output power and phase lock is tested. During the test of the 406MHz transmitter a test message is transmitted, this test message is coded with a special synchronization code and will not be recognized as real alert by the Cospas-Sarsat satellites.
- Visual Inspection
  -The Tron 40VDR should be easily removed and replaced in the Bracket
  - Check for defects on the EPIRB or brackets
  - Make sure that the Tron 40VDR and Bracket are not painted or otherwise covered with chemicals, oil, etc
  - Is the lanyard firmly attached to the Tron 40VDR ? (and not tied to the vessel)
- Check the expiry dates on:
  - EPIRB Battery
  - Hydrostatic Release Unit (HRU)

6.2.2 EVERY 12TH MONTH:

The Tron 40VDR Float Free Capsule is under the regulation of the IMO MSC.1/Circ 1040 rev.1 annual test performed by authorized radio-surveyor or authorized personal trained and certified by Jotron AS.

Additional requirement for testing Tron 40VDR Float Free Capsule is IMO MSC.1/Circ.1222.

Important to clean the surface on the docking-module, fitted on the FB-40 bracket and the Tron 40VDR Float Free Capsule lower part, so to obtain secure and safe data transmission.

GPS Test (see chap. 6.1.2,)

6.2.3 EVERY 2ND YEAR:

Replace Hydrostatic Release Unit (HRU) including Plastic Bolt
(Check expiry date on label)

6.2.4 EVERY 4TH OR 5TH YEAR:

The Tron 40VDR Float Free Capsule is under the regulation according to SOLAS Chap.IV reg.15.9.2 and IMO MSC.Circ 1039 guideline. The Tron 40VDR Float Free Capsule will comply to this guideline, either by fulfilling the complete service or be replaced by an exchange unit.

- There is only Authorized, trained and certified personal, made by Jotron AS who can carry out the SBM-service on the Tron 40VDR Float Free Capsule. The interval is dependent on the flag-state administration.SBM (see 7.1)

6.2.5 EVERY 10TH YEAR:

Jotron advice to replace both the Tron 40VDR Float-Free Capsule and float free bracket.

6.3 TEST AND MAINTENANCE RECORD

DATE	N/T/B	SIGN	INSP

N= New EPIRB installed, T= Test, B= New battery

6.4 FALSE ALERT

False alerts transmitted by EPIRB
False alerts are a serious problem for the rescue service. Nearly 90% of EPIRB initiated distress alerts turn out to be false alarms.
If for any reason, your EPIRB should cause a false alarm, it is most important that you contact the nearest search and rescue authority and tell them it was a false alarm. They can then stand down any rescue service (coast radio station or appropriate CES or RCC). Use any means at your disposal to make contact. Switch off the distress alarm by de-activating your EPIRB, as soon as possible.

If your beacon is activated in a non-distress situation or a distress situation which has been resolved and you no longer require assistance, contact the nearest search and rescue authorities via the most expeditious means available with the following information:

- Beacon ID number (15 character UIN):
- Position (At time of activation):
- Date of Activation:
- Time of Activation (Time zone):
- Duration of Activation:
- Beacon marke and model:
- Vessel Name/ID:
- Circumstances/cause (if known):

USA
The United States search and rescue authority is the U.S. Coast Guard. The primary points of
contact are:

Pacific Ocean Area
USCG Pacific Area Command Centre
Tel: +1 (510)-437-3701

Atlantic Ocean / Gulf of Mexico Area
USCG Atlantic Area Command Centre
Tel: +1 (757)-398-6231

From Any Location
USCG Headquarters Command Centre
Tel: +1 (800)-323-7233

6.5 SERVICE PROCEDURE

6.5.1 WARRANTY CLAIM

Warranty claims are valid until 5 years from delivery from our warehouse. The warranty is valid as long as service and battery replacement are carried out by authorized Jotron distributors or agents.
All products are warranted against workmanship and factory defect, in material. Any warranty claims must be sent to Jotron, in writing.

Jotron reserve the right to decide whether a defective unit is within warranty terms and conditions. If Jotron make a decision of repairing a defective product, a written description of the claim and a Jotron RMA number, should follow the unit when returning it back to Jotron's factory.

Please be noted that un-protective electronics board MUST be packed in anti-static bag, before returning to Jotron's factory.

Any costs related to transportation and/or workmanship linked up to the return of the product being repaired shall be covered by the customer.

Jotron's obligations during warranty replacement;

- Replace defective unit, including any programming
- Delivery terms: DAP Incoterms 2010 by regular freight to "Place" (Airport)
-

Service agent's obligations during warranty claims:

- Supply replacement unit from own stock if available
- If agreed, return defective unit to Jotron
- Electronic units must be shipped in antistatic bags or covered with Jotron's plastic cover

6.5.2 SERVICE – NOT WARRANTY CLAIM

Service, such as testing, installation, programming, replacement, marking and battery exchange are provided by an authorized Jotron service agent. Jotron do not meet the cost for services mentioned above. Distributor or service agent should stock the most commonly needed spare parts.

7 MAINTENANCE

7.1 EPIRB MODULE / BATTERY PACK

If the EPIRB is fitted on a vessel which requires GMDSS compliant equipment, the EPIRB shall be serviced, tested and approved as required by SOLAS regulation IV/15.9.2 of SOLAS 1974 as amended with, in accordance with MSC/Circ.1039 guidelines for shore-based maintenance of Satellite EPIRBs within 5 years, or by the date of battery expiry, whichever comes first.

7.1.1 CHANGE OF BATTERY

The Tron 40VDR battery must be changed at Jotron SBM authorized workshop to be GMDSS compliant.

If your Tron 40VDR is not under any international or national regulations, battery can be change by authorized Jotron representatives/partners/dealers.

7.2 HYDROSTATIC RELEASE REPLACEMENT

WARNING

Only Jotron approved hydrostatic release is acceptable for use

7.2.1 REPLACING THE RELEASE MECHANISM IN FB-40 BRACKET

1. Release and remove FB-40 top cover by removing the cotter pin (1).
   WARNING! The EPIRB can drop out of the FB-40 bracket when releasing the top cover. Remove the EPIRB from the bracket.
2. Press down the spring-loaded bracket plate and remove the hydrostatic unit by sliding it out of its locking slot (4)
3. Check the expiry date of the new hydrostatic release mechanism. The date should be approximately two years from the date of purchase.
4. Install a new hydrostatic unit by pressing down the spring loaded bracket plate and sliding the unit into its locking slot (5).
5. Refit the EPIRB and the FB-40 top cover (6-7).
6. First fit the cover from the top. Mount the cutter pin then press firmly at the bottom back cover while pressing the cover down. A “snap” sound can be heard when the snap-lock enters (8-9).

1

2

3

4

5

6

7

8

9

8 SPARE PARTS

8.1 TRON 40VDR SPARE PARTS

X-87910	Tron 40VDR Float Free Capsule
X-89340	Tron 40VDR lower battery module incl SBM-kit
X-86218	FB-40 HRU-Kit
X-87934	Tron 40VDR Float Free Capsule user-manual
X-89339	Tron 40VDR Float Free Capsule VDR storage module.
X-87921	FB-40 docking module.
X-88237	Silicone grease for Tron 40VDR

NOTE: Keep the original satellite EPIRB packaging, since it may be needed if the EPIRB has to be shipped for servicing. UN requirements for shipping some batteries as hazardous goods require certain packaging standards and labelling

8.2 COUNTERFEIT SPARE PARTS.

Jotron AS is aware of extended counterfeit spare parts being marketed and sold to fit GMDSS safety products. It is of extreme importance that any spare parts being fitted to this product are original spare parts, manufactured or approved by Jotron AS. Any use of counterfeit spare parts will deviate from the product type-approval certificates.

9 SERVICE AGENTS

Please look at www.jotron.com for Marine Service Agents.

Jotron Group subsidiary companies:

Jotron UK Ltd.
Crosland Park
Cramlington
NE23 1LA
United Kingdom
Tel +44 1670 712000
Fax +44 1670 590265
E-mail: sales@jotron.com

Jotron Asia Pte. Ltd.
Changi Logistics Center
19 Loyang Way #04-26
Singapore 508724
Tel +65 65426350
Fax +65 65429415
E-mail: sales@jotron.com

Jotron USA, Inc.
10645 Richmond Avenue, Suite 170
Houston, TX 77042
USA
Tel +1 713 268 1061
Fax +1 713 268 1062
E-mail: sales@jotron.com

10 ABBREVIATIONS AND DEFINITIONS

BAUD
Transmission rate unit of measurement for binary coded data (bit per second)
BIT
Short form of Binary Digit. The smallest element of data in a binary-coded value
BPS
Bits Per Second
COSPAS
COsmicheskaya Sistyema Poiska Avariynich Sudov (Space System for the Search of Vessels in Distress)
EPIRB
Emergency Position Indicating Radio Beacon
GLOBAL POSITIONING SYSTEM (GPS)
The NAVSTAR Global Positioning System, which consists of orbiting satellites, a network of ground control stations, and user positioning and navigation equipment. The system has 24 satellites plus 3 active spare satellites in six orbital planes about 20,200 kilometers above the earth.
IEC
International Electro-technical Commission
IMO
International Maritime Organization
IBRD
International 406MHz Beacon Registration Database
ITU
International Telecommunication Union
LED
Light Emitting Diode
LUT
Local User Terminal (Ground Station)
MCA
Marine and Coastguard Agency (UK)
MCC
Mission Control Centre
NOAA
National Oceanic and Atmospheric Administration (USA)

RCC
Rescue Coordination Centre

SARSAT
Search and Rescue Satellite-Aided Tracking System
SBM
Shore Based Maintenance – as required by SOLAS regulation IV/15.9.2 of SOLAS 1974 as amended with, in accordance with MSC/Circ. 1039 guidelines for Shore-Based Maintenance (SBM) of Satellite EPIRBs within 5 years if:

Passenger ships (> 12 passengers) and cargo ships (> 300GT) engaged in International voyages, shall perform SBM as follows:

- Latest by the date of the EPIRB label with this text, or the battery Label, whichever is first.
- When this EPIRB becomes due for SBM in accordance with national requirements.

VDR
Voyage Data Recorder.
VHF
Very High Frequency -A set of frequencies in the 30-300MHz region.

11 AMENDMENT RECORDS

Amend-ment no	By	Date	Page(s)	Vers.	Reason for change
1	SEH	07.05.2014	Total 37	A	New Manual

www.jotron.com

CONTACT INFORMATION

Jotron AS (HQ)
P.O.Box 54
3281 Tjodalyng
Norway
Tel: +47 33 13 97 00
Fax: +47 33 12 67 80
sales@jotron.com

Jotron AS
P.O.Box 23
3195 Skoppum
Norway
Tel: +47 33 13 97 00
Fax: +47 33 12 67 80
sales@jotron.com

Jotron AS
Døløsletta 7
3408 Tranby
Norway
Tel: +47 32 84 53 87
Fax: +47 32 84 55 30
sales@jotron.com

Jotron UK Ltd.
Crosland Park
Cramlington
NE23 1LA
United Kingdom
Tel: +44 (0) 1670 712000
Fax: +44 (0) 1670 590265
sales@jotron.com

Jotron Asia Pte. Ltd.
19 Loyang Way
Changi Logistics Centre
Rear Office Block 04-26
Singapore 508724
Tel: +65 65426350
Fax: +65 65429415
sales@jotron.com

Jotron USA, Inc.
10645 Richmond Avenue, Suite 170
Houston, TX 77042
USA
Tel: +1 713 268 1061
Fax: +1 713 268 1062
sales@jotron.com

v.1