DM-4000 SERIES MOBILE RADIO

PMN:Digital 50W vehicle Radio

USER MANUAL

VHF

Transceiver

DM-4100

DM-4200

UHF

Transceiver

DM-4400

Version #1

YEONHWA M TECH CO.,LTD

36, Jeonpa-ro, 44 beon-gil, Manan-gu, Anyang-si, Gyeonggi-do, Korea 14086

TEL:+82-31-444-7270

Table of Contents

1. Introduction

   Features

2. Specifications

3. Appearance

4. Controls & Keys

5. Message

6. Cautions

7. Warranty statement

1. FEATURES OF THE DM-4000 SERIES

High-powered DM-4000 Series is a greatly designed compact Digital Mobile Radio.
Embeded SFR (Single Frequency Repeater) function enables DM-4000 Mobile Radio to role as a Repeater and Base Station. An external accessory connector can be used in various ways.

Main features of the DM-4000 Series

- VHF (50W) / UHF (50W) Maximum output power
- Output power (RF Power) can be controlled with 5 levels
- 2,048 Channels, 64 Zones
- ETSI Standard DMR Protocol Tier1, 2
- Automatic DMR & Analog Mode Switching
- Call Recording
- Remote Radio Stun / Revive
- Transmitting and receiving text Message within 40 letters
- Mixed Channels (Digital & Analog)
- Data compatible between MOTO and HYT
- SFR (Single Frequency Repeater) - Optional
- Encryption (AES256, DMRA AES256) - Optional
- TX Interruption, Priority call- Optional
- External/Internal GPS - Optional
- BCL (Busy Channel Lock)/BCLO (Busy Channel Lock Out)
- Selectable Squelch Level (0~10)
- Heavy-Duty Microphone
- Internal or External Speaker
- Ignition Function / Horn Alert / Public Address / Talk Around 기능
- 4W / 8Ω Audio Output
- OLED Display
- Power Source DC+12.0V ±15%

2. SPECIFICATION

2.1 General

Frequency Range	DM-4100 : 136~174 MHz DM-4200 : 225~288 MHz DM-4400 : 400 ~470 MHz
Frequency Stability	±1.5ppm (-30 to +60℃)
Programmable Channels	2,049 Channels
Zone 채널용량	64 (1 Zone = Max 1,024 Channels)
Channel Spacing	12.5KHz
Digital Vocoder	AMBE++
Dimensions	144.5mm (H)×165mm (W)×172mm (D)
Weight	1.1Kg
Power Source	DC +12.0V
Current Drain (Maximum)	Receive mode, rated audio out – 1A (Audio Max) Transmit mode – 11A Standby mode – 300mA

Receiver

Sensitivity	0.25uV (BER 1%)
Selectivity	70dB (12.5KHz)
Spurious & Harmonic Rejection	36 dBm (< 1GHz) -30 dBm (> 1GHz)
FM Hum & Noise Ratio	40dB (12.5KHz)
Audio Output Power	4 Watt/8 ohm load
Audio Distortion	Less than 3%
Audio Response	+1, -3 dB from 6dB per octave de-emphasis Characteristic from 300 ~ 3000Hz
Input Impedance	50 ohms

Transmitter

RF Power Output	5/10/20/30/50Watt
Spurious & Harmonic	-36 dBm (< 1GHz) -30 dBm (> 1GHz)
FM Hum & Noise Ratio	40dB (12.5KHz)
Audio Distortion	Less than 3%
Audio Response	+1, -3dB from 6dB per octave pre-emphasis Characteristic from 300 ~ 3000Hz
Input Impedance	50ohms

Appearance of DM-4000 Series Mobile Radio

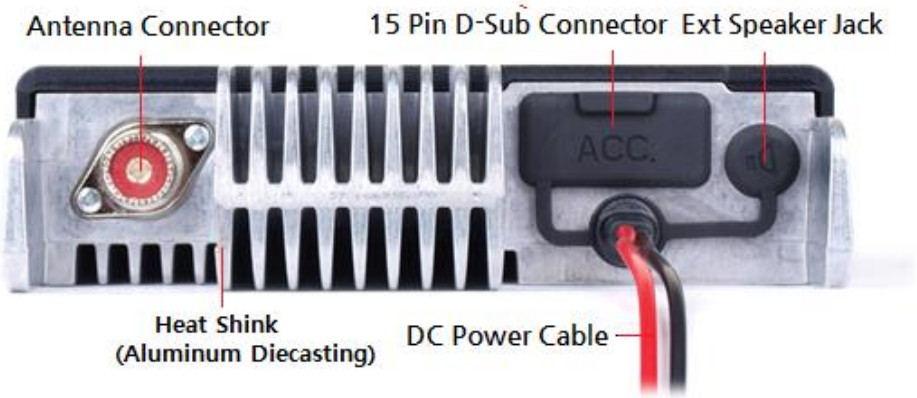

Figure 3-1`) DM-4000 series appearance

3.1 Dimension of DM-4000

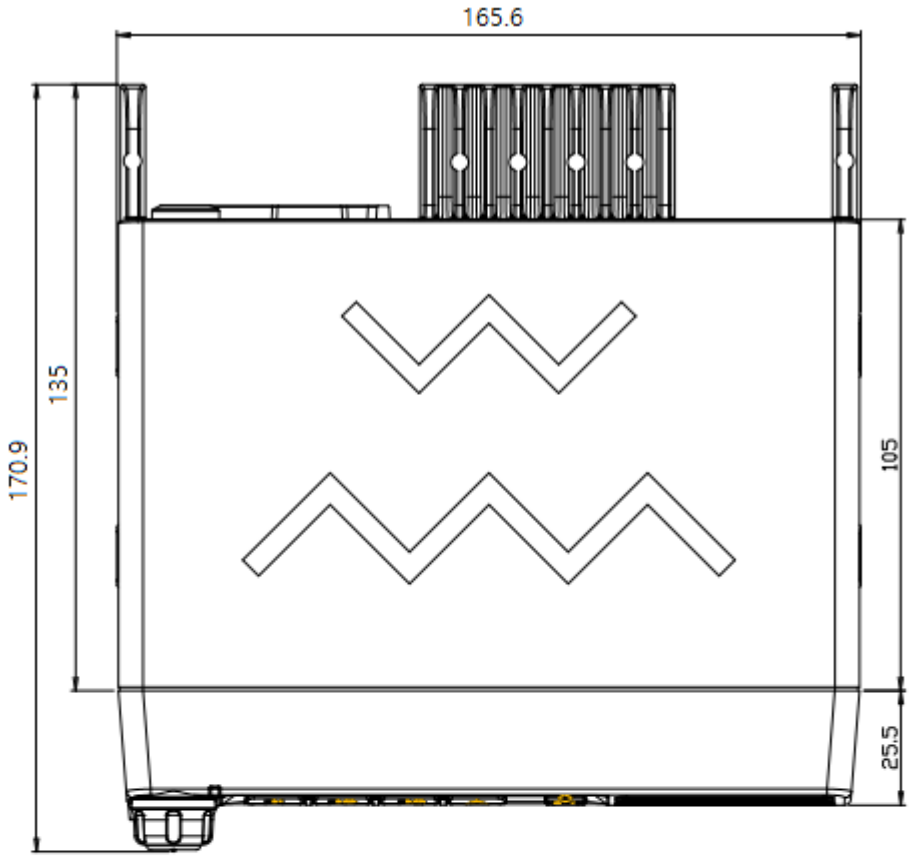

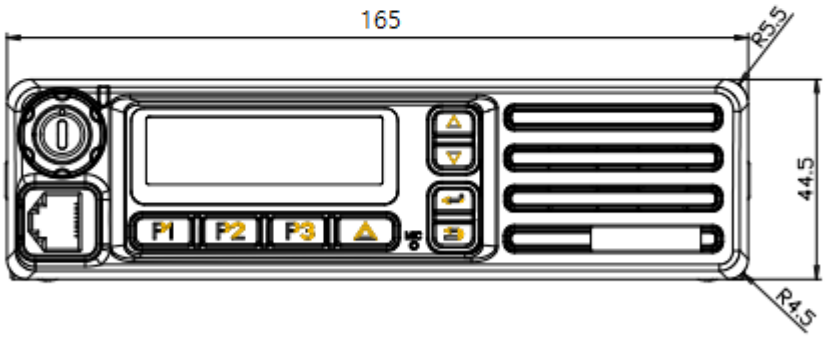

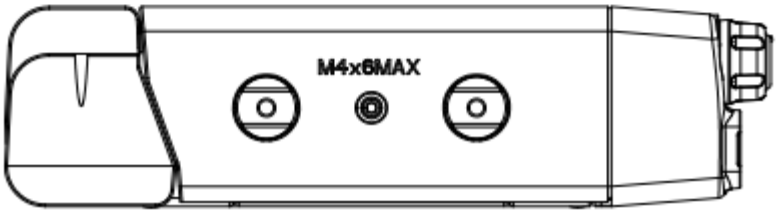

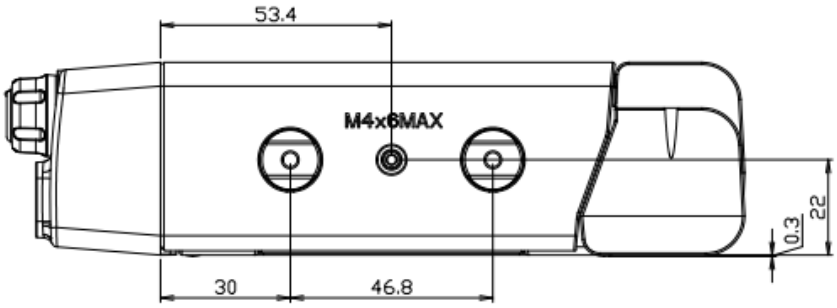

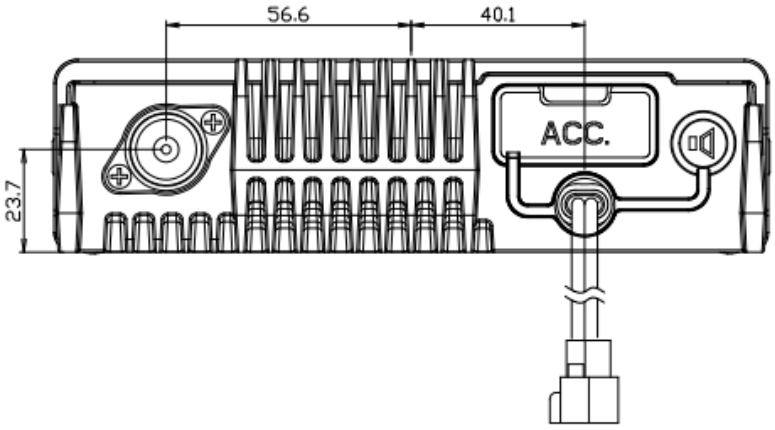

3.2 Installing the Transceiver

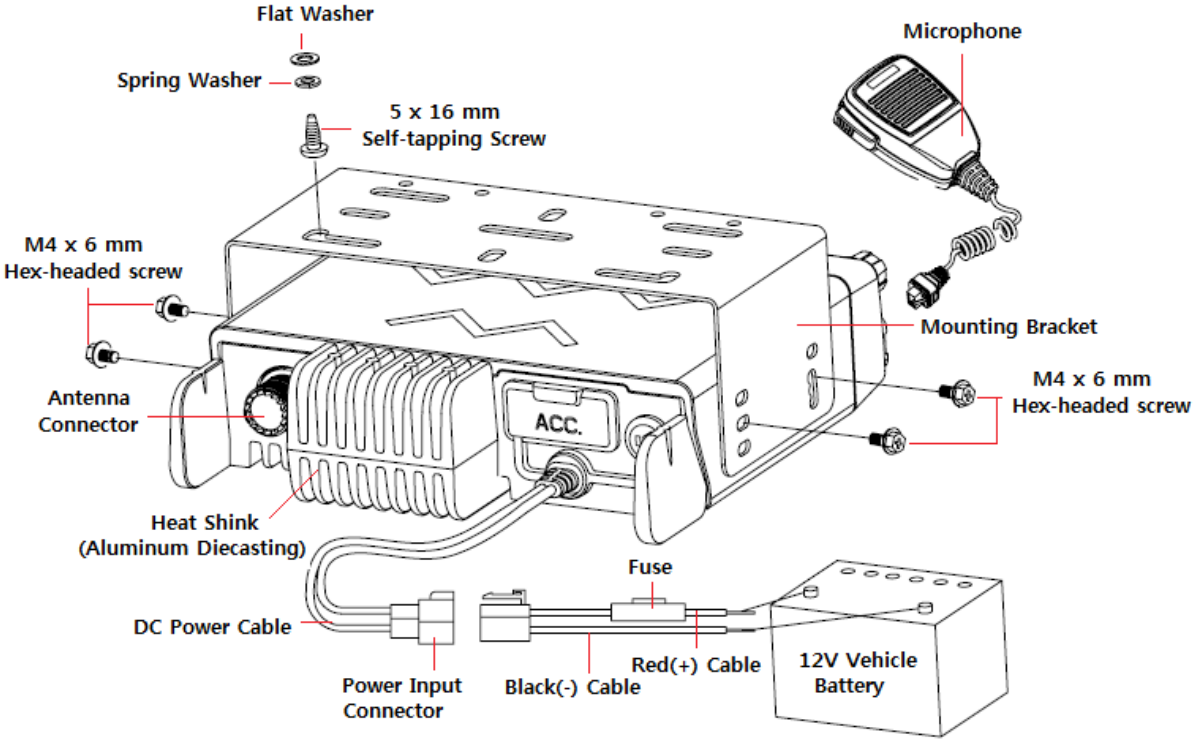

Figure 3-3) Parts & Installation

3.3 Package Contents

DC power cable

- 15A Fuse(XM-1000, PM-2000) ---------- 1

Mounting Bracket ---------- 1

Screw set

- 5 x 16 mm self-tapping screw ---------- 4
- Hex-headed screw with washer ---------- 4
- Spring washer ---------- 4
- Flat washer ---------- 4

Microphone (with cable)

- ACC 708 ---------- 1

Microphone hanger (with 4 x16 mm self-tapping screws) ---------- 1

Instruction manual ---------- 1

3.4 Terminal Description

ACC (D-SUB 15 Pin Connector)

Pin NO	Pin Name	Description	Specification	I/O	Remake
1	RSSI	DC Power Output	0.6~1.4V	O	
2	IGN	Ignition Signal Input	Power ON : ↑ 8V Power OFF : ↓ 6V R79 is selection	I	
	LSP	Low Speed Data	R12 is selection		
3	EXT_SPK	Loudspeaker Output	4Ω, 4Watt	O	
4	AF_OUT	Audio Output	500mV	O	
5	EXT_MIC	Audio Input	5㎏	I	
6	TXD/FCN1	TX Serial Data	3.3V TTL	O	
7	RXD/FCN2	RX Serial Data	3.3V TTL	I	
8	EXT_PTT	External PTT	3.3V(H) : PTT OFF 0V(L) : PTT ON	I/O	
9	F_AUDIO	IF IC Output	100mV	O	
10	COR/COS	Squelch Output	S.Q ON : 3.3 V S.Q OFF : 0V	O	
11	EXT/INPUT	Programmable	High Impedance	I/O	
12	DC+5V	DC Power Supply	DC+5V Max 100mA	O	
13	HR1	Horn Alert Signal Output	Max 3A	O	
14	HR2	Horn Alert Signal Output	Max 3A	O	
15	GND	Ground	Ground	-	

Microphone Jack

Pin NO	Pin Name	Description	Specification	I/O	Remake
1	MBL	Backlight of Microphone	-	O	
2	DC+12.0V	DC Power Output		O	
3	GND	Ground	Ground	-	
4	PTT/TXD0	PTT/PC Serial Data	3.3V TTL	I	
5	ME	MIC Ground	MIC Ground	-	

6	MIC	MIC Signal Input	600Ω	I	
7	HOOK/RXD0	HOOK/PC Serial Data	3.3V TTL	I	
8	DM	MIC Data Detection	High Impedance	I/O	

Speaker Jack (3.5mm Phone Jack) 4Watt/4Ω

Pin NO	Pin Name	Description	Specification	I/O	Remake
1	SPO	External Speaker Output	4Watt/4Ω	O	
2	GND	Ground	Ground	O	

DC Input Power Connector

Pin NO	Pin Name	Description	Specification	I/O	Remake
Red	DC+12.0V	DC Power Output		I	
Black	GND	Ground	Ground	I	

Antenna Connector

Impedance is 50

4. Controls & Keys (Buttons)

Figure 4-1) Controls and Buttons

4.1 Power ON/OFF Volume Switch

Turn the power on/off switch clockwise to power on, then LCD display screen will start with a sound to make a beginning. Turn the power on/off switch counter-clockwise to power off, then LCD display screen will end with a voice guide "Good-bye".
And also audio volume level can be adjusted by turning the power on/off volume switch clockwise/counter-clockwise.

The registered zone is selectable in order. With powered on, to select the desired zone, press the Power On/Off button for 1 second.

4.2 PTT Button

Press the PTT button to transmit voice and release the PTT button to receive voice. It is recommended to talk putting 2~4 inches distance from the microphone.

4.3 Menu Button

To enter the menu tree as displayed in Figure 4-2, press the MENU button. Press the ▲ to move to the right and press ▼ to move to the left. To enter the submenu, press the MENU button one more time.

.

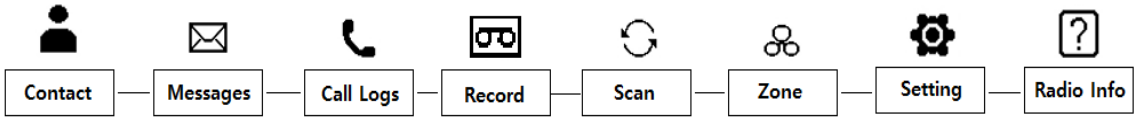

Figure 4-2) DM-4000 Menu

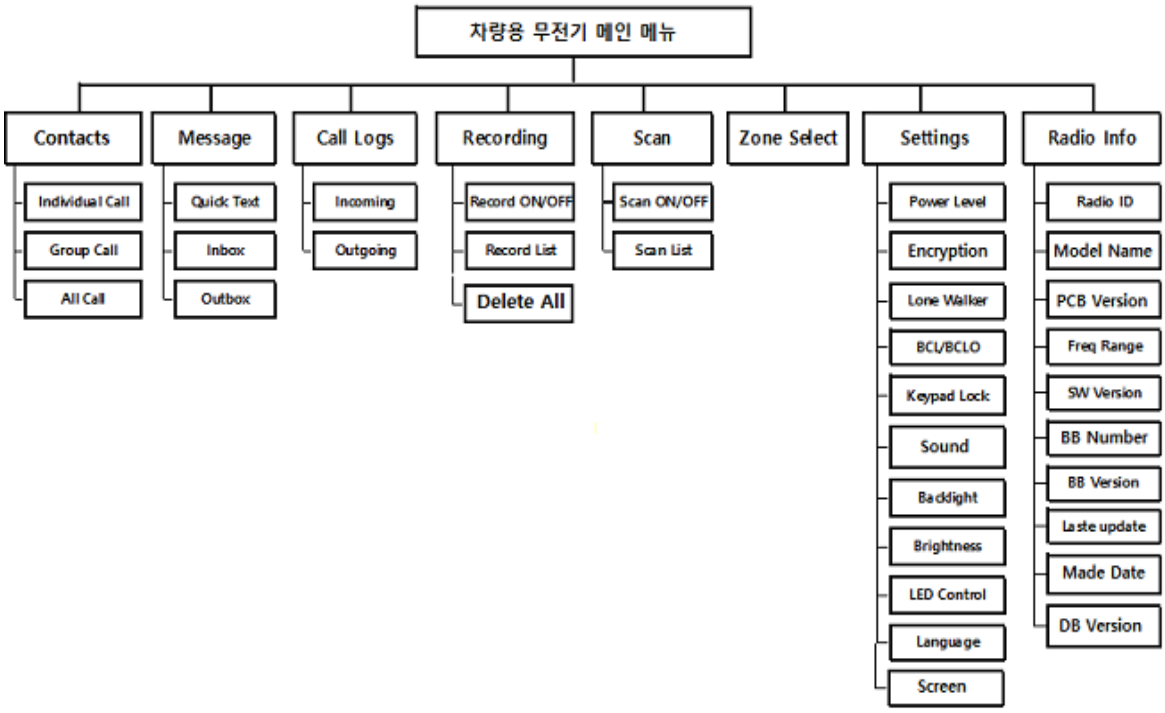

Figure 4-3) DM-4000 Menu Tree

4.4 Menu ▲/▼ Button and Channel ▲/▼ Button

Press the MENU button to enter and press ▲/▼ button to select from the menu list. And with power on, press ▲/▼ button to move UP / Down the channel.

4.5 Menu Exit

Press Cancel/Return button to exit the current menu out.

4.6 Programming Button (P1, P2, P3, ▲)

Programming buttons are newly added to enhance user convenience and these buttons can be set via CPS program.

4.7 Emergency Microphone

Emergency microphone can be used in case of emergencies when the mobile microphone is unavailable. Emergency Microphone PTT button can be set via CPS program.

4.8 External Connector Jack

External Connector Jack is used to connect a Mobile Hand-microphone, to program Software and to upgrade firmware.

4.9 LED Display

LED indicates the operational status of the radio.

① LED will illuminate RED color when transmitting

② LED will illuminate GREEN color when receiving

③ If the LED blinks GREEN, the frequency is the same but the color code does not match

④ Low Battery: LED blinks RED with beep sound

5. Operating Instruction of DM-4000 Series

5.1 Menu selection

Press Menu Button to enter the menu mode. 8 menus are selectable in order to set up the Radio according to usage purpose and environment.

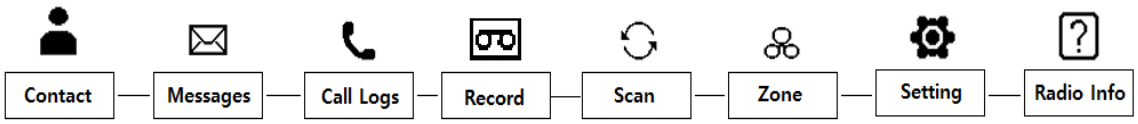

Figure 5-1) DM-4000 Menu

☞ Caution) If no operation is running more than 25 seconds, the Radio will end the menu mode and will revert to standby mode.

5.1.1 Contact

The Contact List provides a list of individuals, groups or all calls of which you can make a direct call. To initiate a call, select the Contacts section from the menu (or press the contact button for direct access), press the menu/enter button to see the list of contacts, press ▲/▼ buttons to the desired contact and press the PTT button to initiate the call. The lists of contacts can be set within the radio by the CPS program.

- ICONs shown in contact list
  - : Individual contact list (individual calls, individual messages can be sent)
  - : Group contact list (group call, group message can be sent)
  - : All contact lists (terminals with the same channel and color code are usable)

5.1.2 Text Messages

If you are in another mode or miss a message, the message icon will be displayed indicating the new message has arrived. The Message selection offers the ability to perform one of three functions: Quick Message, Inbox, and Outbox.

1) Quick Text message

The ability to send from a choice of 40 preset messages with up to 40 characters per text message. The preset messages can be set by the CPS program. Select Quick Text from the message menu by pressing the menu/enter button to view the registered message(s). Using the keys, select the message you want to send, and press the menu/enter button to see the contents of the message. Press the menu/enter button again to view the list of contacts, and using the keys, select the contact for the message to be sent. Press the menu/enter button and the message will be sent to the contact(s).

2) Inbox

Inbox stores up to 10 received text messages; when the received messages exceed 10, the oldest message is cleared and the newest incoming message is registered. When a new message arrives, the contents will be displayed on the LCD screen. When you choose messages stored in the list, you can view the received messages and the caller ID that initiated the call. If you want to delete text message from the inbox, select "delete all" from within the inbox menu and press the menu button to delete all messages.

3) Outbox

Outbox stores up to 10 outgoing text messages; when the outgoing messages exceed 10, the oldest message is cleared and the newest sent message is registered. When you choose messages stored in the list, you can view the sent messages and the caller ID to whom they were sent. If you want to delete text message from the Outbox, select "delete all" from within the outbox menu and press the menu button to delete all messages.

5.1.3 Call Logs

This function allows the viewing of incoming and outgoing calls from individuals only. Any group call, all calls are not saved. The contents are managed in the same manner as in the inbox and outbox of the text message.

1) Inbox

Inbox stores up to 10 received calls; when the received calls exceed 10, the oldest call is cleared and the newest incoming call is registered. When a new call incomes, the caller ID will be displayed on the LCD screen. If you want to delete caller ID from the inbox, select "delete all" from within the inbox menu and press the menu button to delete all IDs.

2) Outbox

Outbox stores up to 10 outgoing calls; when the outgoing calls exceed 10, the oldest call is cleared and the newest outgoing call is registered. When a new call made, the caller ID will be displayed on the LCD screen. If you want to delete caller ID from the Outbox, select "delete all" from within the outbox menu and press the menu button to delete all IDs.

5.1.4 Call Recording

This function is used to record the content of outgoing and incoming calls.
Up to 63 conversations/recordings can be stored with each recording limited to 160 seconds. Call recording can be selected on the Setting menu. If you want to delete recordings, select "delete all" from the "Record" on the menu.

5.1.5 Scan

This function provides the ability to turn scan on/off and to review the scan list as programmed into the radio via the CPS program. During the scan, set the channel on you desire to listen, and receive signal. If you want to make a call while scanning, set it via the CPS program.

1) Scan ON/OFF
   On/Off setting can be set in the Scan Menu

2) Scan List
   Scan list can be set via CPS program

5.1.6 ZONE

Up to 64 zones (with up to 1,024 channels per zone) can be programmed into the radio via the CPS program.

5.1.7 Setting

This function allows the change to the settings of Power Level, Voice Encryption, Lone Worker, Busy Channel Lock (BCL)/Busy Channel Lock Out (BCLO), Button (Keypad) Lock, Tones, LCD Backlight, LCD Brightness, LED Control, Screen and Language.

1) Power Level

Power level can be set with 5 levels.

2) Voice Encryption

This is a feature to encrypt the incoming and outgoing voice. Voice Encryption function for each channel can be set via CPS program and 128/192/256 Bit Encryptions are available.

3) Lone Walker

This function can inform others about your safety within the time set in the menu. Set-up time is from 1 to 100 minutes.

4) BCL/BCLO

This function prevents interference when the current channel is busy.

- Digital Mode

BCL On : if the current channel is busy, transmitting is prohibited.

- Analog Mode

BCL On & BCLO Off : if the current channel is busy, transmitting is prohibited.

BCL On and BCLO On : Transmitting occurs when it matches the received tone.

5) Button Lock

This function locks the button to prohibit the accidental press of keys and buttons. When the keypad lock is set, all keys/buttons are locked except for the PTT button, the emergency button, and power ON/OFF button. If any of these buttons are pushed, the keypad lock will enable again after certain time from the pressing of the last button. Press the P1 button for 2 seconds to temporarily unlock.

6) Tones

This function enables to setup and adjust volume and tones associated with volume, Dial, Message and Buttons.

- Volume can be adjusted.
- Dial Tone can enable or disable
- Test Message Alert Tone can enable or disable
- Button Tone can enable or disable.
- Starting Tone can enable or disable.
- Microphone Input sound can be adjusted.
- Fixed volume prevents volume change.

7) OLED LCD Backlight

This function enables or disables the OLED LCD backlight ON/OFF.

8) OLED Contrast (Brightness)

The function is to adjust the contrast/brightness of the LCD from 1 to 7 levels.

9) LED Control

The function is to set the enable or disable the LED status display. It can be set via the CPS program.

10) Language

The function is to select the language available.

11) Screen setting

Wait screen is configurable as screen1, screen 2 and screen 3.

5.1.8 Radio Information

A menu that shows the information of the device.

6. Precautions

6.1 Matters affecting the performance of the equipment.

WARNING	Don't remove the antenna from the radio and don't modify the antenna or make any changes to the antenna. Strong electronic waves emitted from the radio can have an effect on the performance of the radio if the antenna is modified and can cause the radio to have a defect not covered under warranty.

Caution	Don't use other manufacturer's accessories (such as rechargeable batteries, adapters, external speaker microphone and earphone, etc.). Unknown or unauthorized accessories may damage the radio and void the warranty.

WARNING	Don't disassemble or reorganize the radio. The disassembly or reorganization of your radio is punishable by law and can cause damage to the radio that will not be covered by the warranty.

WARNING	Don't use frequencies you do not have a permit for. Unauthorized frequencies is punishable by law.

Caution	Avoid excessive shock to the radio. Don't place the radio where the direct sunlight, humidity and/or the high temperature occurs, battery damage can occur in this environment.

6.2 Influences to the operations of Radio or other Equipment

The Radio emits a strong electronic wave which may have an effect on the operation of other equipment and can also be affected by those other devices.

WARNING	If using radio in an area where medical equipment is being used, please get permission from relevant staff to prevent interference issues.

Caution	Be careful when using your radio in a place where computers or other electronic devices are being used because the strong electronic waves from the radio can affect this equipment.

7. Safety Notes

Please make sure to read the followings for safe and effective use of the Radio.

WARNING	• Please keep the radio away at least 1 inch from the body. • Do not touch antenna if it is damaged. Risk of skin burn can occur if the outside surface of antenna gets stripped out. • Please be careful when putting the battery in a pocket or a bag. If you contact a conductive metal to a battery terminal, there is a heat and fire risk to your radio. • Please don't listen to the radio at a high-volume level when using earphones. Loud volume may have a lasting bad effect on your hearing. • It is recommended to adjust the volume step by step to the level you want after you set the radio volume of the radio at a low level. • Please don't remove or replace or charge or discharge the battery in a hazard area where sparks could cause an electrical fire. • Turn off the radio in areas where there is a strong electromagnetic force

WARRANTY CARD

Thank you for purchasing DM-4000 Series.

1. This product has passed strict quality control and testing process.
2. Warranty is one year from original date of purchase.
   Failure of the product under normal operating conditions, during the warranty period may be repaired by YeonHwa M Tech Co.,Ltd or our authorized service organization free of charge.
3. For the following cases, some service fees will be charged.
   - When repair occurs after the warranty period has passed.
   - When the product is damaged due to user's mishandling, abuse or improper operation.
   - When the product is damaged due to user's modification, attempted repair or otherwise access to sealed/non-user serviceable items.
   - When the product is damaged due to fire, pollution, earthquakes and any other natural or unnatural conditions, accidents, etc.

4. Product and personal information

PRODUCT NAME		DM-4000 SERIES
SIN NUMBER		
PURCHASE DATE		
PURCHASER	NAME	
	ADDRESS	

※ Please contact Yeonhwa M Tech below for Return Merchandise Authorization (RMA) number before you send your radio back for service.

YeonHwa M Tech Co.,Ltd

36 Jeonpa-Ro, 44Beon-Gil, Manan-Gu, Anyang-City, Gyeongg-Do, Korea

Tel: 82-31-444-7270 / FAX : 82-31-444-7271

FCC statement

This device complies with Part 15 of the FCC Rules. Operation is subject to the following two conditions: (1) this device may not cause harmful interference, and (2) this device must accept any interference received, including interference that may cause undesired operation.

Changes or modifications not expressly approved by the party responsible for compliance could void the user's authority to operate the equipment.

NOTE: This equipment has been tested and found to comply with the limits for a Class B digital device, pursuant to Part 15 of the FCC Rules. These limits are designed to provide reasonable protection against harmful interference in a residential installation. This equipment generates, uses and can radiate radio frequency energy and, if not installed and used in accordance with the instructions, may cause harmful interference to radio communications. However, there is no guarantee that interference will not occur in a particular installation. If this equipment does cause harmful interference to radio or television reception, which can be determined by turning the equipment off and on, the user is encouraged to try to correct the interference by one or more of the following measures:

-- Reorient or relocate the receiving antenna.

-- Increase the separation between the equipment and receiver.

-- Connect the equipment into an outlet on a circuit different from that to which the receiver is connected.

-- Consult the dealer or an experienced radio/TV technician for help.

This device and its antenna(s) must not be co-located or operation in conjunction with any other antenna or transmitter.

Radiation Exposure Statement

To maintain compliance with FCC's RF Exposure guidelines, This equipment should be installed and operated with minimum distance of 100cm from your body.

RF Energy Exposure Awareness and Control Information and Operational Instructions for Occupational Use
Notice: this radio is intended for use in occupational/controlled conditions where users have full knowledge of their exposure and can exercise control over their exposure to meet the occupational limits in FCC and International standards. This radio device is NOT authorized for general population consumer use.

Federal Communication Commission (FCC) Regulations
When Digital 50W vehicle Radio is used as a consequence of employment, the FCC requires users to be fully aware of and able to control their exposure to meet occupational requirement. Exposure awareness can be facilitated by the use of a product label directing users to specific user awareness information. Your Digital 50W vehicle Radio has a RF Exposure Product Label. Also, your Digital 50W vehicle Radio Radio user manual includes information and operating instructions required to control your RF exposure and satisfy compliance requirements.

Compliance with RF Exposure Standards
Your Digital 50W vehicle Radio is designed and tested to compliance with a number of national and international standards and guidelines for human exposure to radio frequency electromagnetic energy. This radio compliance with the IEEE (FCC) and ICNIRP exposure limits for occupational/controlled RF exposure environments at operating duty factors of up to 50% talk – 50% listen and is approved for occupational use only. In terms of measuring RF energy for compliance with these exposure guidelines, your radio generates measureable RF energy only while it is transmitting (during talking), not when it is receiving (listening) or in standby mode.

Your Digital 50W vehicle Radio complies with the following RF energy exposure standards and guidelines:

- United States Federal Communications Commission (FCC), Code of Federal Regulations;
- Institute of Electrical and Electronic Engineers (IEEE) C95.1
- International Commission on Non-lionizing Radiation Protection (ICNIRP)

RF Exposure Compliance and Control Guidelines and Operating Instructions for Two-Way Radio Operations
To control your exposure and ensure compliance with the occupational/controlled environment exposure limits, always adhere to the following procedures;

- DO NOT remove the RF Exposure Label from the device
- User awareness instructions should accompany device when transferred to other users.

Operational Instructions and Training Guidelines

To ensure optimal performance and compliance with the occupational/controlled environment RF energy exposure limits in the above standards and guidelines, users should transmit no more than 50% of the time and always adhere to the following procedures;

- In front of the face, hold the radio in a vertical position with microphone (and other parts of the radio including the antenna) at least 100 centimeters away from the nose or lips. Keep the radio at a proper distance is important to ensure compliance.

Note: RF exposure decrease with increasing distance from the antenna.

- Body Worn Operation; when worn the body, always place the radio in an approved clip, holder, or body harness for this product.

Using approved body-worn accessories is important because the use of non-approved accessories may results in exposure levels, which exceed the occupational/controlled environment RF exposure limits

Using only approved supplied or replacement antennas, batteries, and audio accessories, use of non-approved antennas, batteries, and wired or wireless accessories may exceed the applicable RF exposure guidelines (IEEE, ICNIRP or FCC).

IC statement

English Statement

This device contains licence-exempt transmitter(s)/receiver(s) that comply with Innovation, Science and Economic Development Canada's licence-exempt RSS(s). Operation is subject to the following two conditions: 1, This device may not cause interference. 2, This device must accept any interference, including interference that may cause undesired operation of the device.

Safety Information

This equipment complies with IC radiation exposure limits set forth for an controlled exposure environment. When the talk bottom is pushed, it sends out radio frequency (RF) signals. The devices is authorized to operate at a duty not to exceed 50%.

For body-worn operation, this radio has been tested and meets the IC RF exposure guidelines when used with manufacturer accessories supplied or designated for this product. Use of other accessories may not ensure compliance with FCC RF exposure guidelines. Use only the supplied antenna. Unauthorized antennas, modifications, or attachments could damage the transmitter and may violate FCC regulations.

To maintain compliance with RF Exposure guidelines, This equipment should be installed and operated with minimum distance of 100cm from your body.

Canada Déclaration

Le présent appareil est conforme aux CNR d'Industrie Canada applicables aux appareils radio exempts de licence. L'exploitation est autorisée aux deux conditions suivantes : (1) l'appareil ne doit pas produire de brouillage, et (2) l'utilisateur de l'appareil doit accepter tout brouillage radioélectrique subi, même si le brouillage est susceptible d'en compromettre le fonctionnement." l'information sur la sécurité

ce matériel est conforme aux limites de dose d'exposition aux rayonnements énoncés pour contrôlées l'exposition environnement.quand le parler bas est poussé, il envoie des signaux radio fréquence (RF). les dispositifs est autorisée à exploiter, à une obligation de ne pas dépasser 50%. opération portés sur le corps, la radio a été testé et respecte les directives d'exposition aux IC RF utilisée avec le fabricant d'accessoires fournis ou désignés pour ce produit. utilisation d'autres accessoires ne peut s'assurer de la conformité avec les lignes directrices sur l'exposition aux radiofréquences. utiliser uniquement la fournies antenne. les modifications ou les antennes de non autorisée, pourrait nuire à l'émetteur et peuvent violer les règlements de la IC.

l'émetteur à environ 100cm de votre visage et parlez normalement, avec l'antenne a signalé et loin.

RF Energy Exposure Awareness and Control Information and Operational Instructions for Occupational Use
Informations sur la sensibilisation et le contrôle de l'exposition à l'énergie RF et instructions de mise en service en vue de l'utilisation professionnelle

Notice: this radio is intended for use in occupational/controlled conditions where users have full knowledge of their exposure and can exercise control over their exposure to meet the occupational limits in ISED and International standards. This radio device is NOT authorized for general population consumer use.
Avis: cette radio est destinée à être utilisée dans des conditions professionnelles / contrôlées où les utilisateurs ont une connaissance complète de leur exposition et peuvent contrôler leur exposition afin de respecter les limites professionnelles définies par la ISED et les normes internationales. Cet appareil radio N'EST PAS autorisé pour un usage grand public.

Innovation, Science and Economic Development Canada (ISED) Regulations
When Digital 50W vehicle Radio is used as a consequence of employment, the ISED requires users to be fully aware of and able to control their exposure to meet occupational requirement. Exposure awareness can be facilitated by the use of a product label directing users to specific user awareness information. Your Digital 50W vehicle Radio has a RF Exposure Product Label. Also, your Digital 50W vehicle Radio user manual includes information and operating instructions required to control your RF exposure and satisfy compliance requirements.

Règlement sur l'innovation, les sciences et le développement économique Canada (ISDE)
Lorsque la radio portative numérique 3W est utilisée à la suite d'un emploi, la ISED exige que les utilisateurs soient pleinement conscients de leur exposition et en mesure de contrôler leur exposition pour répondre aux exigences professionnelles. La sensibilisation à l'exposition peut être facilitée par l'utilisation d'une étiquette de produit orientant les utilisateurs vers des informations de sensibilisation spécifiques. Votre radio Veicolo Digital 50W a une étiquette de produit d’exposition aux RF. De plus, le manuel d'utilisation de votre radio portative Digital 3W comprend les informations et les instructions d'utilisation nécessaires pour contrôler votre exposition aux RF et satisfaire aux exigences de conformité.

Compliance with RF Exposure Standards
Your Digital 50W vehicle Radio is designed and tested to compliance with a number of national and international standards and guidelines for human exposure to radio frequency electromagnetic energy. This radio compliance with the IEEE (ISED) and ICNIRP exposure limits for occupational/controlled RF exposure environments at operating duty factors of up to 50% talk – 50% listen and is approved for occupational use

only. In terms of measuring RF energy for compliance with these exposure guidelines, your radio generates measureable RF energy only while it is transmitting (during talking), not when it is receiving (listening) or in standby mode.

Your Digital 50W vehicle Radio complies with the following RF energy exposure standards and guidelines:
Innovation, Science and Economic Development Canada (ISED), Code of Canada Regulations;
Institute of Electrical and Electronic Engineers (IEEE) C95.1
International Commission on Non-lionizing Radiation Protection (ICNIRP)

Conformité aux normes d'exposition aux RFVotre radio portative numérique
Votre radio Veicolo Digital 50W est conçue et testée pour être conforme à un certain nombre de normes et directives nationales et internationales relatives à l'exposition des personnes à l'énergie électromagnétique par radiofréquences. Cette radio respecte les limites d'exposition IEEE (ISED) et ICNIRP pour les environnements d'exposition professionnels / contrôlés aux fréquences de service pouvant atteindre 50% de conversation - 50% d'écoute et est approuvé pour une utilisation professionnelle uniquement. Pour ce qui est de mesurer l'énergie RF afin de respecter ces consignes d'exposition, votre radio ne génère une énergie RF mesurable qu'en cours de transmission (en conversation), pas en réception (écoute) ou en mode veille.Votre radio Veicolo Digital 50W est conforme aux normes et directives relatives à l'exposition aux énergies RF suivantes:Innovation, Sciences et Développement économique Canada (ISDE), Règlement sur le Code du Canada;Institut des ingénieurs électriciens et électroniciens (IEEE) C95.1Commission internationale de protection contre les radiations non ionisantes (ICNIRP)

RF Exposure Compliance and Control Guidelines and Operating Instructions for Two-Way Radio Operations
To control your exposure and ensure compliance with the occupational/controlled environment exposure limits, always adhere to the following procedures;
DO NOT remove the RF Exposure Label from the device
User awareness instructions should accompany device when transferred to other users.

Directives de conformité et de contrôle de l'exposition aux RF et instructions d'utilisation pour les opérations radio bidirectionnellesPour
contrôler votre exposition et garantir le respect des limites d'exposition professionnelle / en environnement contrôlé, respectez toujours les procédures suivantes.NE PAS retirer l'étiquette d'exposition aux RF de l'appareilLes instructions de sensibilisation des utilisateurs doivent accompagner l'appareil lors de son transfert à d'autres utilisateurs.

Operational Instructions and Training Guidelines

To ensure optimal performance and compliance with the occupational/controlled environment RF energy exposure limits in the above standards and guidelines, users should transmit no more than 50% of the time and always adhere to the following procedures;

In front of the face, hold the radio in a vertical position with microphone (and other parts of the radio including the antenna) at least 100cm away from the nose or lips. Keep the radio at a proper distance is important to ensure compliance.

Note: RF exposure decrease with increasing distance from the antenna.

Body Worn Operation; when worn the body, always place the radio in an approved clip, holder, or body harness for this product.

Using approved body-worn accessories is important because the use of non-approved accessories may results in exposure levels, which exceed the occupational/controlled environment RF exposure limits

Using only approved supplied or replacement antennas, batteries, and audio accessories, use of non-approved antennas, batteries, and wired or wireless accessories may exceed the applicable RF exposure guidelines (IEEE, ICNIRP or ISED).

Instructions opérationnelles et directives de formation

Pour garantir des performances optimales et le respect des limites d'exposition aux énergies RF définies dans les normes et directives susmentionnées, les utilisateurs ne doivent pas transmettre plus de 50% du temps et se conformer systématiquement aux procédures suivantes.En face du visage, tenez la radio en position verticale avec le microphone (et les autres éléments de la radio, y compris l'antenne) à au moins 100 cm du nez ou des lèvres. Maintenir la radio à une distance appropriée est important pour assurer la conformité.Remarque: l'exposition aux RF diminue avec l'augmentation de la distance par rapport à l'antenne.Opération portée sur le corps; Lorsque vous portez la carrosserie, placez toujours la radio dans un clip, un support ou un harnais approuvé pour ce produit.L'utilisation d'accessoires approuvés pour le port du corps est importante car l'utilisation d'accessoires non approuvés peut entraîner des niveaux d'exposition supérieurs aux limites d'exposition RF des environnements professionnels / contrôlés.Si vous utilisez uniquement des antennes, des batteries et des accessoires audio approuvés ou de remplacement fournis, l'utilisation d'antennes, de batteries et d'accessoires câblés ou sans fil non approuvés peut dépasser les consignes d'exposition RF applicables (IEEE, ICNIRP ou ISED).Instructions opérationnelles et directives de formation