User Manual

VHF/UHF

Transceiver

DX-7100

DX-7400

Version #1 (2023-05-30)

1. DX-7000 Series Features

The DX-7000 series digital radio is equipped with a large, cool 2.0-inch TFT color LCD and a full keypad to provide a variety of services, including control of various industrial facilities.

- Dual-mode(Analog & DMR) Operation
- 1024 Channel Capacity, 64 Zones (1zone = Max 1024 Channels)
- 5/1 Watt RF Power Setting
- Text Messaging with inbox and outbox, Up to 10 Predefined messages.
- Voice Recording and playback
- Remote Stun / Revive / Monitor function.
- Alpha-Numeric Full Keypad
- TDMA Direct Mode
- Voice Encryption Mode (AES256, DMRA256)
- DTMF Encode & Decode
- 2-Tone Encode & Decode
- Lone Worker Mode
- Multiple Scan Modes
- VOX (Voice Operated Transmit)
- Busy Channel Lock (BCL) / Busy Channel Lock Override (BCLO) / Time-Out Timer (TOT)
- Emergency / Siren
- Transmit Interrupt (Option)
- Man down function(Option)
- SFR(Single Frequency Repeater) (Option)
- Etiquette (Vibration) Function (Option)
- Built in GPS(Option)
- 1Watt Audio output
- Built in Flash Lamp
- 2.0 inch TFT LCD(176 x 220) Display
- Waterproof IP67
- MIL STD 810F/G
- DC+7.4V Li-ion / 2,600mAH

2. Specification

DX-7000 Series

General

Frequency Range	DX-7100 VHF : 136~174 MHz
	DX-7400 UHF : 400 ~470 MHz
Frequency Stability	±1.5ppm (-30 to +60℃)
Programmable Channels	64 Zones / 1,024 Channels
Channel Spacing	12.5KHz(DMR), 12.5KHz/25KHz(Analog)
Digital Vocoder	AMBE++ Voice Compression Algorithm
Dimensions	103mm(H) x 52mm(W) x 32mm(D)
Weight	275g
Power Source	DC +7.4V Li-ion 2,600mAH Battery
Current Drain (maximum)	Receive mode, rated audio out – 420 (Audio Max)
	Transmit mode – 1,200mA
	Standby mode – 100mA

Receiver

Sensitivity	0.22uV 12 dB SINAD
Squelch Sensitivity	0.20uV 10dB SINAD
Selectivity	60dB @12.5KHz
Spurious and Harmonic Rejection	-57 dBm (< 1GHz) -47 dBm (> 1GHz)
FM Hum and Noise	40dB (12.5KHz)
Audio Output Power	1 Watt across an 16-ohm load
Audio Distortion	Less than 3% at rated output
Audio Response	+1, -3 dB from 6dB per octave de-emphasis Characteristic from 300 ~ 3000Hz
Input Impedance	50 ohms

Transmitter

RF Power Output	5/1Watt
Adjacent Channel Power	60 dB @12.5 kHz
Spurious and Harmonic	-36 dBm (< 1GHz) -30 dBm (> 1GHz)
FM Hum and Noise	40dB (12.5KHz)
Audio Distortion	3% maximum with 1KHz modulation
Audio Frequency Response	+1, -3dB from 6dB per octave pre-emphasis Characteristic from 300 ~ 3000Hz
Output Impedance	50ohms

3. In-Box Contents

Radio Unit

Battery

2 Slot Charger

Adapter

Antenna

Belt Clip

User Manual

Figure 3-1) DX-7000 Series Main Package Contents

XB-2600 : 2,600mAH Li-ion Battery Pack

XC-100D : One Slot Charger

XC-200D : Dual Slot Charger

XC-1000D : 10 Slot Gang Charger

423D-WS : 400~450MHz SMA Whip Antenna

460D-WS : 440~470MHz SMA Whip Antenna

4. Buttons & LCD Icons

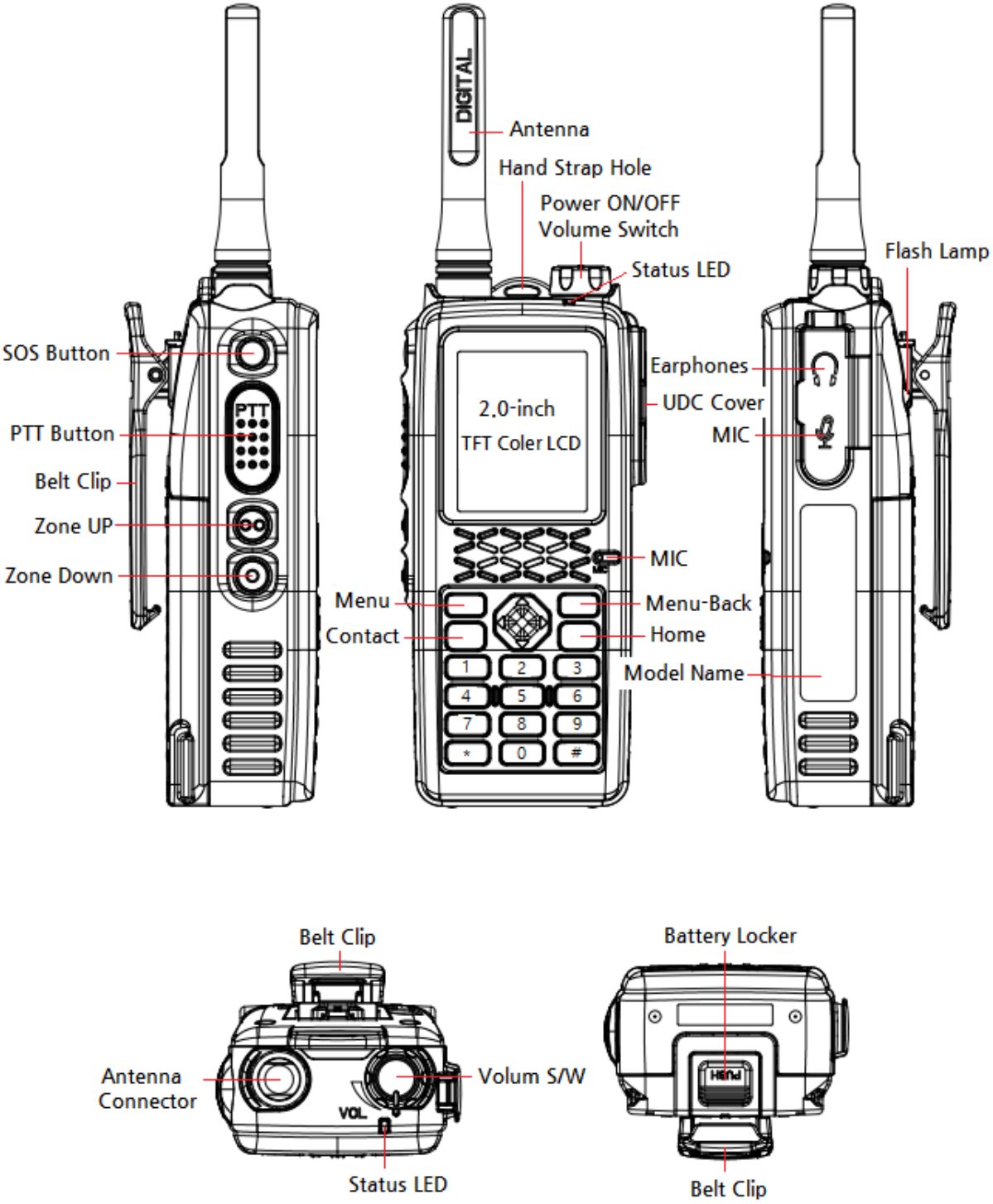

Figure 4-1) DX-7000 Series buttons and knobs

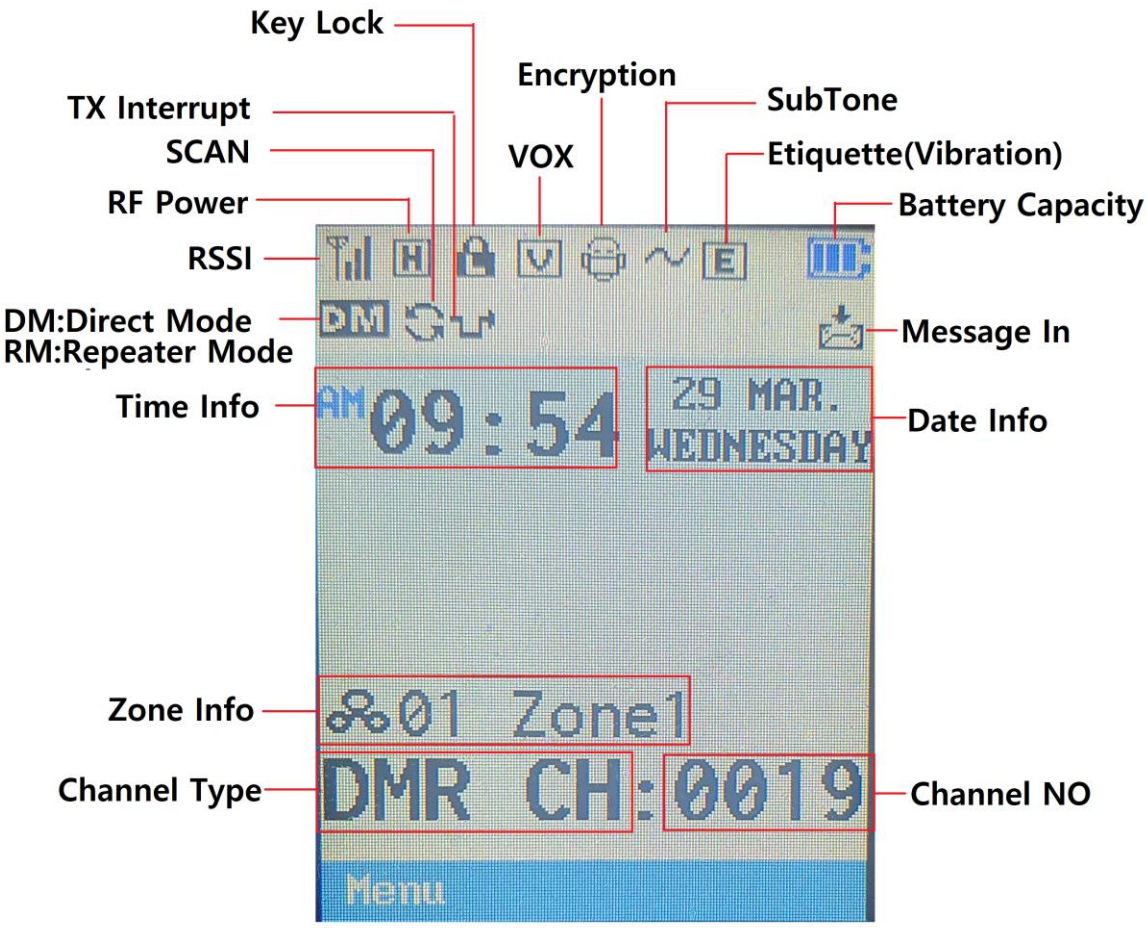

Figure 4-2) DX-7000 LCD Icons

Button & Jack	Operation Description
Power ON/OFF Volume Switch	There will be a sound with a logo on LCD when turning ON the radio. When turning the knob to counter-clockwise, the radio will be turned OFF. You can also control the Volume level with the knob. It volumes up when you turn it clockwise and volumes down when you turn it counter-clockwise.
SOS Button	When the SOS button is pressed in an emergency situation, a warning alarm alerts the current emergency situation.
PTT Button	The radio transmits messages when pressing PTT button. It receives messages when releasing the PTT button. In order to have clear sound when transmitting, it is recommended to speak around 5~10cm away from the MIC.
Zone UP/Down Button	When pressing Zone button, the Zone registered in the program will be selected in order. You can choose the channel by using UP/Down button in the selected zone.

Menu / select Button	Press the Menu/select button to make a selection on the menu or enter its menu options. 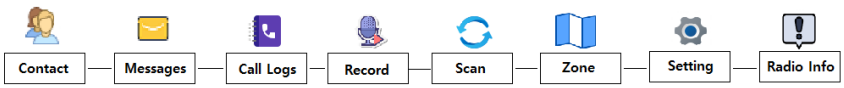
Contact Button	Press the button to enter the contact list programmed into the radio such as Private, Group and All Call.
Menu-Back Button	Menu-back button is used to cancel out of a menu or return to the previous menu screen.
Home Button	Home button is used to return to the initial screen.

5. Installation and Removal

5.1 Antenna Installation and Removal

To install the antenna, insert the antenna into antenna connector and screw the antenna clockwise. To remove the antenna, screw the antenna counter clockwise.

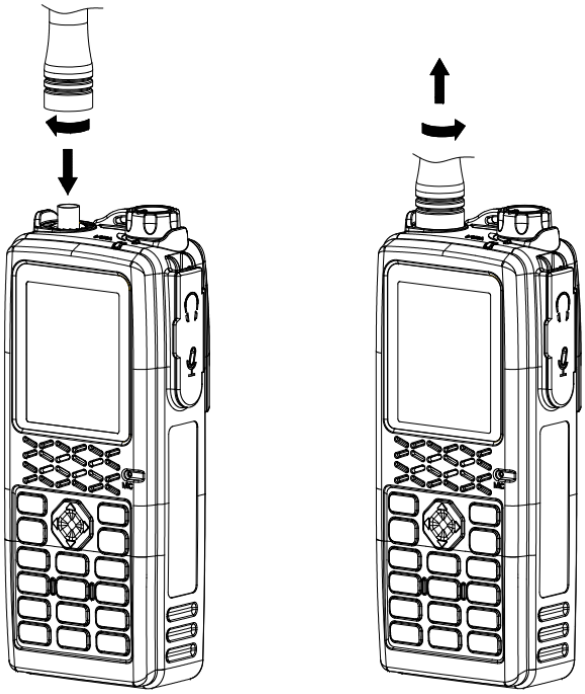

Figure 5-1) Antenna Installation and Removal

Caution	1. Do not over tighten the antenna as it may cause damage to the radio 2. NEVER HOLD by the antenna when carrying the transceiver. 3. Transmitting without an antenna may damage the transceiver.

5.2 Battery Installation and Removal

As shown the figure 5-2) below, to remove the battery, press the locking latch in the direction of arrow 1 and pull up the battery latch in the direction of arrow 2 to pull it away from the radio.

To attach the battery, align the battery pack with the groove of the body (arrow 3) and push the locking latch down to the direction of arrow 4. The battery latch will click shut when locked.

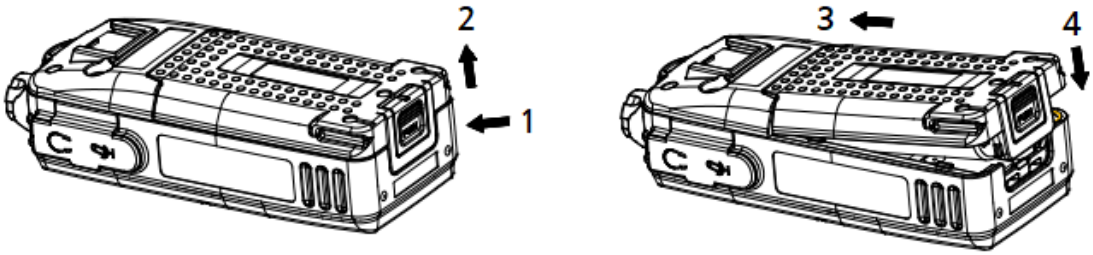

Figure 5-2) Battery Removal and Installation

5.3 Belt Clip Installation and Removal

As shown the figure 5-3) below, Belt clip attaches to the back of the radio above the battery. To attach the belt clip, align the belt clip to the grooves on the back of the radio and push it down to the direction of arrow 1. Clip will click when locked. To remove the belt clip, push the belt clip locking tab in the direction of arrow 2 and pull the belt clip up to the direction of arrow 3 at the same time.

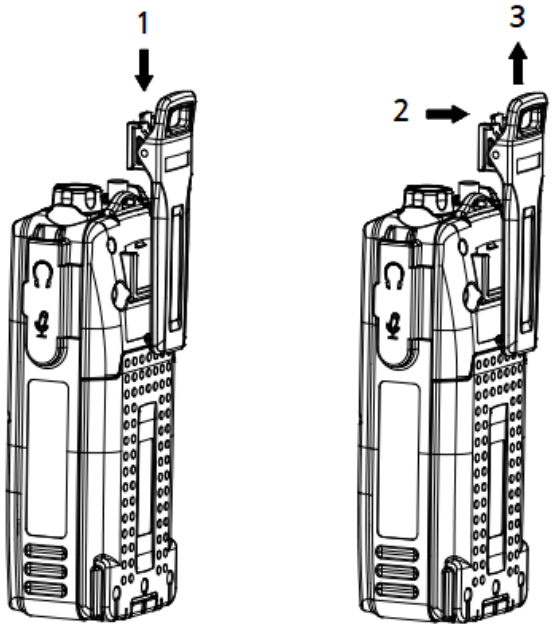

Figure 5-3) Belt Clip Installation and Removal

5.4 External Accessory Connector Jack

To connect the external accessory as shown in Figure 5-4, unscrew the accessory jack cover to the direction of arrow 1, align the accessory with the radio, and then put the accessory on the accessory connector position to screw up.

To remove the external accessory, unscrew the accessory to direction of arrow 3 and then pull it away to the direction of arrow 4.

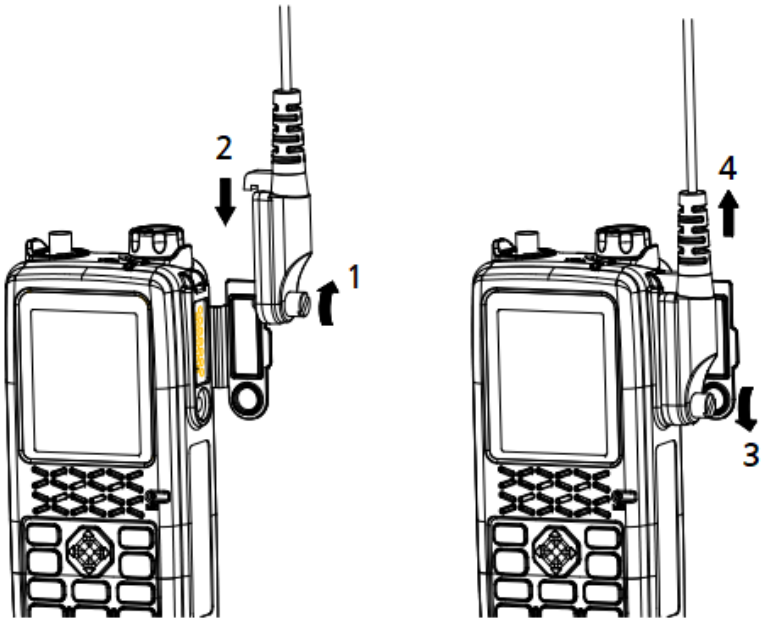

Figure 5-4) External Accessory Installation and Removal

6. Charging the Battery

RED lamp indicates the radio is on the charger (XC-200D) that the unit is starting to charge and the LED will illuminate GREEN when the charging is completed.

Charger (XC-200D) is dual to charge both the main unit and the battery pack.

When both of them are connected to the charger, the front radio with the battery will be charged first and the batter pack later.

6.1 The Time of Charging

Low battery voltage may reduce communication coverage and also make the performance worse.

Please charge the battery in case of following:

1) When you think the performance of the radio has degraded.
2) When the red lamp on RX / TX LED blinks (every 0.5 seconds) during transmission or reception.
3) When the battery icon flickers.
4) When you hear the “beep” sound while the radio is in use.

6.2 How to Charge

1) Plug the adaptor of XC-200D charger in general power AC220V.
2) When charging the battery that is equipped with radio, please turn off the power of the radio , and plug it into the charger.
3) Even if charging it completed (green lamp lights shown), please charge about 30 more minutes for a full charge.

Status	LED Indication	Status	LED Indication
Charging	Red LED lights	Error Detection	Red LED flickers
Complete Charging	Green LED lights	Keep Charging	Green LED Appears

7. Radio Operation

1) MENU Functions

To enter the menu tree as displayed in Figure7, press the menu button.

When pressing the menu button once more while in the menu, it moves to detailed menu section of the selected one.

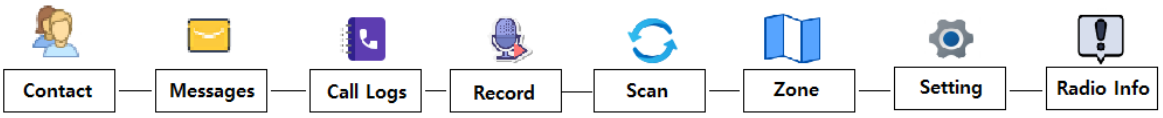

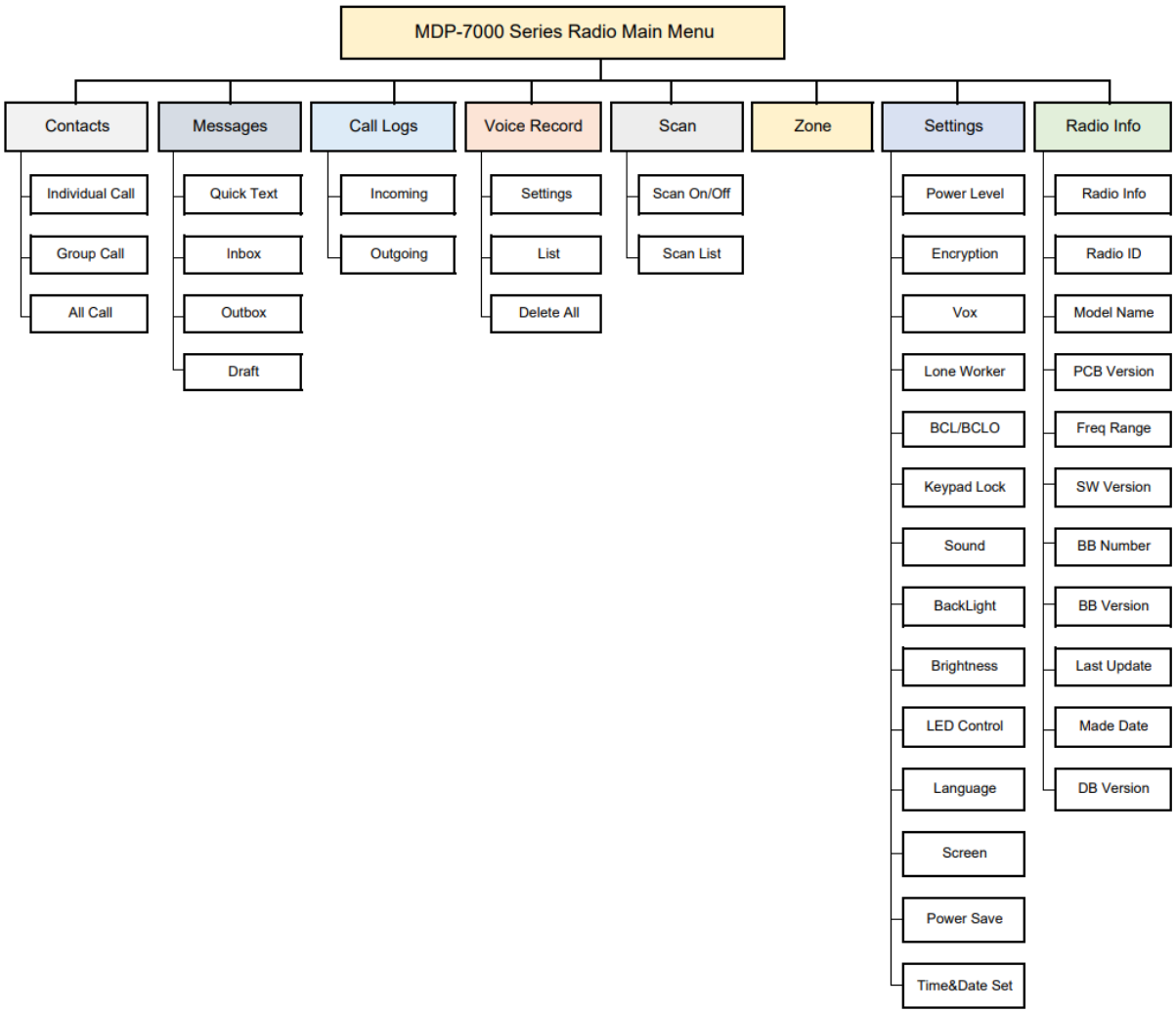

Figure 7-1) DX-7000 Menu Tree

☞ Note) If the menu is not operated for at least 25 seconds after launch, the radio will revert to standby mode.

2) Contact List (Digital Mode Only)

The Contact List Provides a list of individuals, groups or all calls of which you can make a direct call. The lists of contact are set within the radio by the PS. To initiate a call, select the Contact section from the menu (or press the contact button for direct access_, Press the menu/enter button to see the list of contact, press the ▲▼ keys to the desired contact and press the PTT button to initiate the call. The radio will revert to the original contact/channel after a preset time as set by the PS. When you enter in the contact menu, the applicable icon will be shown indicating the type of call.

ICON.

- : Individual Contact List
- : Group Contact List

- 👪: All Contact List (Can be used the terminals with the same channel and color code)

3) Messages (Digital Mode Only)

The message section offers the ability to perform one of the three functions.

Quick Text – The ability to send from a choice of 10 preset messages with up to 40 characters per message. The preset messages are set by the PS.

Inbox - Stores up to 10 received text messages; when the received messages 10, the oldest message is cleared and the newest incoming message is registered. When a new message arrives, the contents will be displayed on the LCD .When you choose messages stored in the list, you can view the sent messages and the caller ID that initiated the call.

Outbox - stores up to 10 outgoing text messages; when the outgoing messages exceed 10, the oldest message is cleared and the newest sent message is registered. When you choose messages stored in the list, you can view the sent messages and the caller ID to whom they were sent.

To obtain access, select the Messages section from the menu, press the menu/enter button to enter into Messages and use the ▲▼ keys to highlight one of the three choices:

a) Quick Text

Select Quick Text from the message menu by pressing the menu/enter button to view the registered message(s) using the ▲▼ keys, select the message you want to send, and press the menu/enter button to see the contents of the message. Press the menu/enter button again to view the list of contacts, and using the ▲▼ keys, select the contact for the message to be sent. Press the menu/enter button and the message will be sent to the contact(s). An acknowledgement will be shown on the display of either "Sent Success" or "Sent Fail". If the message is failed, check to make sure that the user receiving the message has their unit powered on.

b) Inbox

Text messages are shown initially on the screen. If you are in another mode or miss the message, the message icon will be displayed indicating a new message(s) has arrived. Select inbox from the message menu by pressing the menu/enter button to view the registered message(s). Using the ▲▼ keys, select the message you want to view, and press the menu/enter button to see the contents of the messages. Messages that have yet to be viewed will be indicated with a downward arrow inside the envelope; after a message is viewed the arrow will no longer be shown.

If you want to delete messages from the Inbox, select #2 Delete All from within the Inbox menu by pressing the menu/enter button, the question to Delete All will appear with the word “Yes?" Press the menu/enter button to delete all messages. If you choose not to delete the messages, press the return button to exit out.

c) Outbox

Select Outbox from the message menu by pressing the men/enter button to view the outgoing message(s). Using the ▲▼ keys, select the message you want to view. At this point, you can resend the message. Press the menu/enter button to view the contents of the message. Using the ▲▼ keys, select the message you want to send, and press the menu/enter button to see the contents of the message. Press the menu/enter button again to view the list of contacts, and using the ▲▼ keys, select the contact for the message to be sent. Press the menu/enter button and the message will be sent to the contact(s). An acknowledgement will be shown on the display of either “Sent Success” or “Sent Fail”. If the message is failed, check to make sure that the user receiving the message has their unit powered on.

To delete messages from the outbox, select #2 Delete All from within the Outbox menu by pressing the menu/enter button, the question to Delete All will appear with the word “Yes?” Press the menu/enter button to delete all messages. If you choose not to delete the messages, press the return button to exit out.

☞ Note - When sending and receiving text messages, turn off the power saving mode

d) Message draft

A new text message can be created using the keypad. Letters, numbers, and special symbols can be input up to 40 characters. The message can be forwarded to an address in the address book.

4) Call Logs (Digital Mode Only)

The function allows the viewing of incoming and outgoing calls from individuals only. The call log contents are managed in the same manner as in the inbox/outbox of the messages section (reference 7.3 Messages).

5) Call Recording (Digital Mode Only)

This function is used to record the content of outgoing and incoming calls in digital mode only. There are 3 choices of Settings, Lists, and Delete All. Up to 63 conversations/recordings can be stored with each recording limited to 150 seconds. When the recordings exceed 63, the oldest message is cleared and the newest incoming message is registered,

Settings - This section allows the capability to turn the recording capability on off.

Lists – This section allows the viewing of the recorded messages and to play back each message. To play back a message, use the ▲▼ key to the desired message and press the menu/enter button to play the recording.

Delete all – This function provides the capability to delete stored recordings. To delete recordings, select Delete All from within the Voice Recording menu by pressing the menu/enter button, the question to delete all will appear with the word "Yes" Press the menu/enter button to delete all messages. If you choose not to delete the messages, press the return button to exit out.

6) Scan

This function provides the ability to turn scan on/off and review the scan list as programmed into the radio via the PS. The ability to scan digital and analog channels are available. Contact your Authorized Dealer for further information.

7) Zone

Up to 16 zones (with up to 32 channels per zone) can be programmed into the radio via the PS. To select the desired zone, press the ▲▼ keys and press the menu/enter button to accept the zone. Contact your Authorized Dealer for further information.

8) Settings

This function allows the change to the settings of Power Level, Squelch Level, and Voice Operated Transmit (VOX). Lone Worker, Busy Channel Lock (BCL), Busy Channel Lock Out (BCLO). Keypad Lock, Tones, Backlight, Brightness, LED Control, Language, Screen, and Power Save.

(1) Power level

This function sets the power transmitting level at high or low. The setting of low power improves battery life, but diminishes talk range.

(2.1) Squelch Level (Analog only)

This function allows the ability to change the squelch levels of Open, 1,2,3,4, or Tight.

(2.2) Voice Encryption (Digital Only)

This is a features to encrypt the incoming and outgoing voice. Voice Encryption can only be performed through digital channels. The setting of voice encryption codes is set via the PS. Contact your Authorized Dealer for further information.

(3) VOX

VOX function allow transmitting without using the PTT button.

VOX sensitivity level is adjusted from 1 to 5 with 5 being the most sensitive.

(4) Lone Worker (Digital Mode Only)

This function can inform others about your safety within the time set in the menu. Contact your authorized Dealer for further information.

(5) BCL/BCLO

This function prevent interference when the channel is busy.

-. Digital Mode Only

BCL On: If the current channel is busy, the transmission is prohibited.

-. Analog Mode

BCL On & BCLO Off: If the current channel is busy, transmitting is prohibited.

BCL On & BCLO On: Transmitting occurs when it matches the received tone.

(6) Keypad Lock

This is function locks the keypad to prohibit the accidental press of keys and buttons. When the keypad lock is enabled, all keys/buttons are locked except the PTT button, the emergency button, and power ON/ OFF button. If any of these buttons are pushed, the keypad lock will enable again after 25 seconds from the pressing of the last button. Press the P1 key for 2 seconds to temporarily unlock the keypad for 25 seconds.

(7) Tones

This function allows the sound of the Radio to be turned ON/OFF. The kind of the tones is set via the PS. Contact your Authorized Dealer for further information.

(8) Backlight

This function allows you to adjust the time for turning on and off the LCD backlight. The duration of the timed section is set via PS. More information, contact your authorized dealer.

(9) Brightness

This function is to adjust the contrast/brightness of the LCD from low to high.

(10) LED Control

This function is to set the enable or disable the radio status LED. The LED status can be set via the PS.

(11) Language

This function is to select the language (English or Korean) for the menus.

(12) Screen Setting

This function allows the ability to change between Screen1 for Numeric or Screen2 for Alphanumeric. The information displayed is set via the PS. Contact your Authorized Dealer for further information.

(13) Power Saving Mode

This function allows the radio to enter a power saving mode to extend battery usage time.
Off is full power, 1/1 is 50% on/50% off; 1/2 is 33% on/67% off; 1/4 is 25% on/75% off.
Note: When sending and receiving text messages, turn off the power saving mode.
Additional features that can only be set and initiated through PS.

(14) Time & Date Set

The built-in RTC Chip of the radio can set a time and can display the time, day, and date on the main screen.

Note: In case the power was off for a long time, or the battery is not charged, the time will have to be reset because the RTC Chip has stopped working.

9) Radio Information

This informs all the information of the device such as Radio ID, Model Name, PCB Version, Frequency Range, SW Version, BB Number, BB Version, Last Update, Made Date, and DB Version.

8. Precautions

8.1 Precautions for safe operation of this equipment

WARNING	Do not remove the antenna from the radio or do not transform the antenna or do not make any changes on the antenna. The strong electronic emitted from the radio can have an effect on the performance of the radio if the antenna is modified and can cause the radio to have a defect not covered under warranty.
Caution	Do not use other manufacturer's accessories (such as rechargeable battery, adaptor, external speaker microphone and earphone etc.). Unknown or unauthorized accessories may damage the radio and invalidate the warranty.
WARNING	Do not disassemble or reorganize the radio. The disassembly or reorganization of your radio is punishable by law and can cause damage to the radio that will not be covered by the warranty.

WARNING	Do not use other frequency except for the permitted frequency in order not to be punished by the Radio Waves Act.
Caution	• Do not give an excessive shock to the radio. • Do not place the radio where the direct sunlight and/or the high temperature occurs. • If the radio is placed for a long time in a car in summer, the hot temperature in the car may cause explosion of battery. • Do not make a damage to the battery by a sharp substance and/or an excessive shock.

8.2 Do not use the radio where prohibited

The radio emits a strong electronic wave, which may have an effect on the operation of other equipment and also can be affected by those other devices.

WARNING	Please turn off the radio before boarding on the airplane. When using the radio in the airplane, please follow the rules or the instructions of the flight attendants.
WARNING	In case of the area that medical equipment are being used, please use the radio after discussion with the equipment producer or the related doctor.
Caution	Please do not use the radio at the place where computer or other electric/electronic devices are being used because the strong electronic wave from the radio can affect the equipment.

9. Safety Note & FCC

Please make sure to read the followings above for safe and effective use of the radio.

WARNING	● Please keep the Radio away at least 1 inch from the body. ● Do not touch antenna if it is damaged. Risk of skin burn can occur if the outside surface of antenna gets stripped out. ● Please be careful when putting the battery in a pocket or a bag. If you contact a conductive metal to a battery terminal, there is a heat and fire risk to your radio. ● Please don't listen to the radio at a high-volume level when using earphones. Loud volume may have a lasting bad effect on your hearing. ● It is recommended to adjust the volume step by step to the level you want after you set the radio volume of the radio at a low level. ● Please don't remove or replace or charge or discharge the battery in a hazard area where sparks could cause an electrical fire. Turn off the radio in areas where there is a strong electromagnetic force.

FCC statement

This device complies with Part 15 of the FCC Rules. Operation is subject to the following two conditions: (1) this device may not cause harmful interference, and (2) this device must accept any interference received, including interference that may cause undesired operation.

Changes or modifications not expressly approved by the party responsible for compliance could void the user's authority to operate the equipment.

NOTE: This equipment has been tested and found to comply with the limits for a Class B digital device, pursuant to Part 15 of the FCC Rules. These limits are designed to provide reasonable protection against harmful interference in a residential installation. This equipment generates, uses and can radiate radio frequency energy and, if not installed and used in accordance with the instructions, may cause harmful interference to radio communications. However, there is no guarantee that interference will not occur in a particular installation.
If this equipment does cause harmful interference to radio or television reception, which can be determined by turning the equipment off and on, the user is encouraged to try to correct the interference by one or more of the following measures:
-- Reorient or relocate the receiving antenna.
-- Increase the separation between the equipment and receiver.
-- Connect the equipment into an outlet on a circuit different from that to which the receiver is connected.
-- Consult the dealer or an experienced radio/TV technician for help.
This device and its antenna(s) must not be co-located or operation in conjunction with any other antenna or transmitter.

Radiation Exposure Statement
To maintain compliance with FCC's RF Exposure guidelines, This equipment should be installed and operated with minimum distance of 2.5cm from your body.
RF Energy Exposure Awareness and Control Information and Operational Instructions for Occupational Use
Notice: this radio is intended for use in occupational/controlled conditions where users have full knowledge of their exposure and can exercise control over their exposure to meet the occupational limits in FCC and International standards. This radio device is NOT authorized for general population consumer use.

Federal Communication Commission (FCC) Regulations

When Device is used as a consequence of employment, the FCC requires users to be fully aware of and able to control their exposure to meet occupational requirement. Exposure awareness can be facilitated by the use of a product label directing users to specific user awareness information. Your Device has a RF Exposure Product Label. Also, your Device Radio user manual includes information and operating instructions required to control your RF exposure and satisfy compliance requirements.

Compliance with RF Exposure Standards

Your Device is designed and tested to compliance with a number of national and international standards and guidelines for human exposure to radio frequency electromagnetic energy. This radio compliance with the IEEE (FCC) and ICNIRP exposure limits for occupational/controlled RF exposure environments at operating duty factors of up to 50% talk – 50% listen and is approved for occupational use only. In terms of measuring RF energy for compliance with these exposure guidelines, your radio generates measureable RF energy only while it is transmitting (during talking), not when it is receiving (listening) or in standby mode.

Your Device complies with the following RF energy exposure standards and guidelines:

- United States Federal Communications Commission (FCC), Code of Federal Regulations;
- Institute of Electrical and Electronic Engineers (IEEE) C95.1
- International Commission on Non-lionizing Radiation Protection (ICNIRP)

RF Exposure Compliance and Control Guidelines and Operating Instructions for Two-Way Radio Operations

To control your exposure and ensure compliance with the occupational/controlled environment exposure limits, always adhere to the following procedures;

- DO NOT remove the RF Exposure Label from the device
- User awareness instructions should accompany device when transferred to other users.

Operational Instructions and Training Guidelines

To ensure optimal performance and compliance with the occupational/controlled environment RF energy exposure limits in the above standards and guidelines, users should transmit no more than 50% of the time and always adhere to the following procedures;

- In front of the face, hold the radio in a vertical position with microphone (and other parts of the radio including the antenna) at least 2.5 centimeters away from the nose or lips. Keep the radio at a proper distance is important to ensure compliance.

Note: RF exposure decrease with increasing distance from the antenna.

● Body Worn Operation; when worn the body, always place the radio in an approved clip, holder, or body harness for this product.

Using approved body-worn accessories is important because the use of non-approved accessories may results in exposure levels, which exceed the occupational/controlled environment RF exposure limits

Using only approved supplied or replacement antennas, batteries, and audio accessories, use of non-approved antennas, batteries, and wired or wireless accessories may exceed the applicable RF exposure guidelines (IEEE, ICNIRP or FCC).

IC statement

English Statement

This device contains licence-exempt transmitter(s)/receiver(s) that comply with Innovation, Science and Economic Development Canada's licence-exempt RSS(s). Operation is subject to the following two conditions: 1, This device may not cause interference. 2, This device must accept any interference, including interference that may cause undesired operation of the device.

Safety Information

This equipment complies with IC radiation exposure limits set forth for an controlled exposure environment. When the talk bottom is pushed, it sends out radio frequency (RF) signals. The devices is authorized to operate at a duty not to exceed 50%.

For body-worn operation, this radio has been tested and meets the IC RF exposure guidelines when used with manufacturer accessories supplied or designated for this product. Use of other accessories may not ensure compliance with FCC RF exposure guidelines. Use only the supplied antenna. Unauthorized antennas, modifications, or attachments could damage the transmitter and may violate FCC regulations.

To maintain compliance with RF Exposure guidelines, This equipment should be installed and operated with minimum distance of 2.5cm from your body.

Canada Déclaration

Le présent appareil est conforme aux CNR d'Industrie Canada applicables aux appareils radio exempts de licence. L'exploitation est autorisée aux deux conditions suivantes : (1) l'appareil ne doit pas produire de brouillage, et (2) l'utilisateur de l'appareil doit accepter tout brouillage radioélectrique subi, même si le brouillage est susceptible d'en compromettre le fonctionnement."

l'information sur la sécurité

ce matériel est conforme aux limites de dose d'exposition aux rayonnements énoncés pour contrôlées l'exposition environnement.quand le parler bas est poussé, il envoie des signaux radio fréquence (RF). les dispositifs est autorisée à exploiter, à une obligation de ne pas dépasser 50%. opération portés sur le corps, la radio a été testé et respecte les directives d'exposition aux IC RF utilisée avec le fabricant d'accessoires fournis ou désignés pour ce produit. utilisation d'autres accessoires ne peut s'assurer de la conformité avec les lignes directrices sur l'exposition aux radiofréquences. utiliser uniquement la fournies antenne. les modifications ou les antennes de non autorisée, pourrait nuire à l'émetteur et peuvent violer les règlements de la IC.

l'émetteur à environ 2.5cm de votre visage et parlez normalement, avec l'antenne a signalé et loin.

RF Energy Exposure Awareness and Control Information and Operational Instructions for Occupational Use

Informations sur la sensibilisation et le contrôle de l'exposition à l'énergie RF et instructions de mise en service en vue de l'utilisation professionnelle

Notice: this radio is intended for use in occupational/controlled conditions where users have full knowledge of their exposure and can exercise control over their exposure to meet the occupational limits in ISED and International standards. This radio device is NOT authorized for general population consumer use.
Avis: cette radio est destinée à être utilisée dans des conditions professionnelles / contrôlées où les utilisateurs ont une connaissance complète de leur exposition et peuvent contrôler leur exposition afin de respecter les limites professionnelles définies par la ISED et les normes internationales. Cet appareil radio N'EST PAS autorisé pour un usage grand public.

Innovation, Science and Economic Development Canada (ISED) Regulations
When Device is used as a consequence of employment, the ISED requires users to be fully aware of and able to control their exposure to meet occupational requirement. Exposure awareness can be facilitated by the use of a product label directing users to specific user awareness information. Your Device has a RF Exposure Product Label. Also, your Device user manual includes information and operating instructions required to control your RF exposure and satisfy compliance requirements.

Règlement sur l'innovation, les sciences et le développement économique Canada (ISDE)
Lorsque l'appareil est utilisé dans le cadre de l'emploi, l'ISED exige que les utilisateurs soient pleinement conscients et capables de contrôler leur exposition pour répondre aux exigences professionnelles. La sensibilisation à l'exposition peut être facilitée par l'utilisation d'une étiquette de produit dirigeant les utilisateurs vers des informations spécifiques de sensibilisation des utilisateurs. Votre appareil a une étiquette de produit d'exposition RF. En outre, le manuel d'utilisation de votre appareil comprend des informations et des instructions d'utilisation nécessaires pour contrôler votre exposition aux RF et satisfaire aux exigences de conformité.

Compliance with RF Exposure Standards
Your Device is designed and tested to compliance with a number of national and international standards and guidelines for human exposure to radio frequency electromagnetic energy. This radio compliance with the IEEE (ISED) and ICNIRP exposure limits for occupational/controlled RF exposure environments at operating duty factors of up to 50% talk – 50% listen and is approved for occupational use only. In terms of measuring RF energy for compliance with these exposure guidelines, your radio generates measureable RF energy only while it is transmitting (during talking), not when it is receiving (listening) or in standby mode.

Your Device complies with the following RF energy exposure standards and guidelines:
Innovation, Science and Economic Development Canada (ISED), Code of Canada Regulations;
Institute of Electrical and Electronic Engineers (IEEE) C95.1
International Commission on Non-lionizing Radiation Protection (ICNIRP)

Conformité aux normes d'exposition aux RFVotre radio portative numérique
Votre Radio portable numérique 5W est conçue et testée pour être conforme à un certain nombre de normes et directives nationales et internationales relatives à l'exposition des personnes à l'énergie électromagnétique par radiofréquences. Cette radio respecte les limites d'exposition IEEE (ISED) et ICNIRP pour les environnements d'exposition professionnels / contrôlés aux fréquences de service pouvant atteindre 50% de conversation - 50% d'écoute et est approuvé pour une utilisation professionnelle uniquement. Pour ce qui est de mesurer l'énergie RF afin de respecter ces consignes d'exposition, votre radio ne génère une énergie RF mesurable qu'en cours de transmission (en conversation), pas en réception (écoute) ou en mode veille.Votre Radio portable numérique 5W est conforme aux normes et directives relatives à l'exposition aux énergies RF suivantes:Innovation, Sciences et Développement économique Canada (ISDE), Règlement sur le Code du Canada;Institut des ingénieurs électriciens et électroniciens (IEEE) C95.1Commission internationale de protection contre les radiations non ionisantes (ICNIRP)

RF Exposure Compliance and Control Guidelines and Operating Instructions for Two-Way Radio Operations
To control your exposure and ensure compliance with the occupational/controlled environment exposure limits, always adhere to the following procedures;
DO NOT remove the RF Exposure Label from the device
User awareness instructions should accompany device when transferred to other users.

Directives de conformité et de contrôle de l'exposition aux RF et instructions d'utilisation pour les opérations radio bidirectionnellesPour
contrôler votre exposition et garantir le respect des limites d'exposition professionnelle / en environnement contrôlé, respectez toujours les procédures suivantes.NE PAS retirer l'étiquette d'exposition aux RF de l'appareilLes instructions de sensibilisation des utilisateurs doivent accompagner l'appareil lors de son transfert à d'autres utilisateurs.

Operational Instructions and Training Guidelines
To ensure optimal performance and compliance with the occupational/controlled environment RF energy exposure limits in the above standards and guidelines, users should transmit no more than 50% of the time and always adhere to the following procedures;

In front of the face, hold the radio in a vertical position with microphone (and other parts of the radio including the antenna) at least 2.5cm away from the nose or lips. Keep the radio at a proper distance is important to ensure compliance.
Note: RF exposure decrease with increasing distance from the antenna.
Body Worn Operation; when worn the body, always place the radio in an approved clip, holder, or body harness for this product.
Using approved body-worn accessories is important because the use of non-approved accessories may results in exposure levels, which exceed the occupational/controlled environment RF exposure limits
Using only approved supplied or replacement antennas, batteries, and audio accessories, use of non-approved antennas, batteries, and wired or wireless accessories may exceed the applicable RF exposure guidelines (IEEE, ICNIRP or ISED).

Instructions opérationnelles et directives de formation
Pour garantir des performances optimales et le respect des limites d'exposition aux énergies RF définies dans les normes et directives susmentionnées, les utilisateurs ne doivent pas transmettre plus de 50% du temps et se conformer systématiquement aux procédures suivantes.En face du visage, tenez la radio en position verticale avec le microphone (et les autres éléments de la radio, y compris l'antenne) à au moins 2.5 cm du nez ou des lèvres. Maintenir la radio à une distance appropriée est important pour assurer la conformité.Remarque: l'exposition aux RF diminue avec l'augmentation de la distance par rapport à l'antenne.Opération portée sur le corps; Lorsque vous portez la carrosserie, placez toujours la radio dans un clip, un support ou un harnais approuvé pour ce produit.L'utilisation d'accessoires approuvés pour le port du corps est importante car l'utilisation d'accessoires non approuvés peut entraîner des niveaux d'exposition supérieurs aux limites d'exposition RF des environnements professionnels / contrôlés.Si vous utilisez uniquement des antennes, des batteries et des accessoires audio approuvés ou de remplacement fournis, l'utilisation d'antennes, de batteries et d'accessoires câblés ou sans fil non approuvés peut dépasser les consignes d'exposition RF applicables (IEEE, ICNIRP ou ISED).Instructions opérationnelles et directives de formation

Detachable Antenna Requirement
The Antenna which will used with this device must equal or below 0dBi.
L'antenne qui sera utilisée avec cet appareil doit être égale ou inférieure à 0dBi.