PSEN ml b 1.1

PILZ

THE SPIRIT OF SAFETY

- PSEN sensor technology

Operating Manual-1003884-EN-08

This document is the original document.

All rights to this documentation are reserved by Pilz GmbH & Co. KG. Copies may be made for the user's internal purposes. Suggestions and comments for improving this documentation will be gratefully received.

Source code from third-party manufacturers or open source software has been used for some components. The relevant licence information is available on the Internet on the Pilz homepage.

Pilz®, PIT®, PMI®, PNOZ®, Primo®, PSEN®, PSS®, PVIS®, SafetyBUS p®, SafetyEYE®, SafetyNET p®, the spirit of safety® are registered and protected trademarks of Pilz GmbH & Co. KG in some countries.

SD means Secure Digital

Section 1	**Introduction**		**6**
	1.1	Validity of documentation	6
	1.2	Using the documentation	6
	1.3	Definition of symbols	6
Section 2	**Safety**		**8**
	2.1	Intended use	8
	2.2	Safety regulations	9
	2.2.1	Safety assessment	9
	2.2.2	Additional documents that apply	9
	2.2.3	Use of qualified personnel	9
	2.2.4	Warranty and liability	10
	2.2.5	Disposal	10
	2.3	For your safety	10
Section 3	**Overview**		**11**
	3.1	Unit features	11
	3.2	Scope of supply	11
Section 4	**Function description**		**12**
	4.1	Structure	12
	4.2	Activation of safety inputs S31 and S41 (solenoid operation)	13
	4.2.1	Activation with specification of direction	13
	4.2.2	Activation without specification of direction	13
	4.3	Safety Device Diagnostics	14
	4.4	Operating modes	15
	4.5	Block diagram	18
	4.6	Auxiliary release	18
	4.6.1	Recommissioning	20
	4.7	Prevent restart	20
	4.8	Escape release	21
	4.8.1	Recommissioning	22
Section 5	**Wiring**		**23**
	5.1	Important information	23
	5.2	Pin assignment, connector and cable	23
	5.3	EMC requirements	23
Section 6	**Connection to control systems and evaluation devices**		**25**
	6.1	Important information	25
	6.2	Minimum requirements for activation of guard locking	25
	6.3	Single connection	27
	6.4	Connection to Pilz evaluation devices	28
	6.4.1	Connection example with PNOZmulti and Safety Device Diagnostics	28
Section 7	**Teaching in the actuator**		**29**
	7.1	PSEN ml 1.1	29

Section 8	**Installation**		**30**
	8.1	Important information	30
	8.2	Tapped hole	31
	8.3	Install fixing screws in parallel to actuator	33
	8.4	Install fixing screws side-on to actuator	33
	8.5	Centre the bolt in the actuator housing	35
	8.6	Rotate the bolt in the actuator housing 90°	35
	8.7	Installation on sliding gate	36
	8.8	Installation on swing gate	37
	8.9	Installation with mounting bracket	39
	8.10	Installation with mounting plate	40
	8.11	Installing the escape release	40
	8.11.1	Important information	40
	8.11.2	Installation positions for escape release	41
	8.11.3	Installation stationary escape release	42
	8.11.4	Installation external escape release	44
	8.11.5	Uninstalling the escape release	47
Section 9	**Adjustment**		**48**

Section 10	**Operation**		**49**
	10.1	Normal mode	49
	10.2	Error display	51
Section 11	**Checks and maintenance**		**52**
Section 12	**Dimensions**		**53**
Section 13	**Technical details**		**60**
	13.1	Classification according to ZVEI, CB24I	63
	13.2	Safety characteristic data	63
Section 14	**Supplementary data**		**65**
	14.1	Radio approval	65
	14.2	Technical details for mounting bracket without handle unit	65
	14.3	Technical details for mounting bracket with handle unit	65
Section 15	**Order reference**		**66**
	15.1	System	66
	15.2	Accessories	66
Section 16	**Appendix**		**69**
Section 17	**EC declaration of conformity**		**70**

1 Introduction

1.1 Validity of documentation

This documentation is valid for the product PSEN ml b 1.1 from Version 2.0.

This operating manual explains the function and operation, describes the installation and provides guidelines on how to connect the product.

1.2 Using the documentation

This document is intended for instruction. Only install and commission the product if you have read and understood this document. The document should be retained for future reference.

1.3 Definition of symbols

Information that is particularly important is identified as follows:

DANGER!

This warning must be heeded! It warns of a hazardous situation that poses an immediate threat of serious injury and death and indicates preventive measures that can be taken.

WARNING!

This warning must be heeded! It warns of a hazardous situation that could lead to serious injury and death and indicates preventive measures that can be taken.

CAUTION!

This refers to a hazard that can lead to a less serious or minor injury plus material damage, and also provides information on preventive measures that can be taken.

NOTICE

This describes a situation in which the product or devices could be damaged and also provides information on preventive measures that can be taken. It also highlights areas within the text that are of particular importance.

INFORMATION

This gives advice on applications and provides information on special features.

2 Safety

2.1 Intended use

The safety gate system is used for interlocking and guard locking swing gates and sliding gates.

The safety gate system can be operated in two ways:

- Unlocking with condition

  The safety gate system prevents the safety gate from being unlocked while there is any hazard within the danger zone.
- Unlocking without condition

  The operator can unlock the safety gate system at any time. After starting the unlocking, the guard locking creates a stop command. The time required to unlock the interlocking guard has to be longer than the time required to stop the hazardous machine function.

The hazardous machine function may only be executed under the following conditions:

- There is a high signal at safety outputs 12 and 22 and
- There is a low signal at safety outputs S31 (Lock/Unlock Request 1) and S41 (Lock/Unlock Request 2).

Safety inputs S31 and S41 (solenoid operation) may only be operated under the following condition:

- Plant is in a safe condition

  Make sure that this is the case with an AND operation in the safety system immediately before the output is operated.

The safety switch meets the requirements in accordance with:

- EN 60947-5-3 with the actuator PSEN ml 1.1: PDDB
- EN 62061: SIL CL 3
- EN ISO 13849-1: PL e (Cat. 4)
- EN ISO 14119: Coding level Low, type 4

The safety switch may only be used with the corresponding actuator PSEN ml 1.1.

The safety level PL e (Cat. 4)/SIL CL 3 is only achieved if

- the safety outputs use 2-channel processing
- The solenoid has 2-channel operation via safe, tested outputs, suitable for PL e (Cat. 4)/SIL CL 3 applications.

With 1-channel operation of the safety inputs S31 (Lock/Unlock Request 1) and S41 (Lock/Unlock Request 2) it is only possible to achieve safety level PL d (Cat. 2)/SIL CL 2.

Foreseeable misuse

- Safety switches and actuators of the safety gate system PSEN ml b 1.1 must **not** be used as mechanical limit stops
- Use of the PSEN ml b 1.1 under corrosive environmental conditions (cooling emulsions, surface treatment, gases, …)

  Please contact Pilz.

2.2 Safety regulations

2.2.1 Safety assessment

Before using a device it is necessary to perform a safety assessment in accordance with the Machinery Directive.

Functional safety is guaranteed for the product as a single component. However, this does not guarantee the functional safety of the overall plant/machine. In order to achieve the required safety level for the overall plant/machine, define the safety requirements for the plant/machine and then define how these must be implemented from a technical and organisational standpoint.

2.2.2 Additional documents that apply

Please read and take note of the following documents.

Only for use of the Safety Device Diagnostics (SDD):

- Operating manual for the fieldbus module, for example SDD ES ETH or SDD ES PROFIBUS
- System description "Safety Device Diagnostics"

For the use of passive junctions:

- Operating manual of a passive junction, for example:
  - PSEN ix2 F4 code
  - PSEN ix2 F8 code
  - PDP67 F 4 code

You will need to be conversant with the information in these documents in order to fully understand this operating manual.

2.2.3 Use of qualified personnel

The products may only be assembled, installed, programmed, commissioned, operated, maintained and decommissioned by competent persons.

A competent person is a qualified and knowledgeable person who, because of their training, experience and current professional activity, has the specialist knowledge required. To be able to inspect, assess and operate devices, systems and machines, the person has to be informed of the state of the art and the applicable national, European and international laws, directives and standards.

It is the company’s responsibility only to employ personnel who

- Are familiar with the basic regulations concerning health and safety / accident prevention,
- Have read and understood the information provided in the section entitled Safety
- Have a good knowledge of the generic and specialist standards applicable to the specific application.

2.2.4 Warranty and liability

All claims to warranty and liability will be rendered invalid if

- The product was used contrary to the purpose for which it is intended,
- Damage can be attributed to not having followed the guidelines in the manual,
- Operating personnel are not suitably qualified,
- Any type of modification has been made (e.g. exchanging components on the PCB boards, soldering work etc.).

2.2.5 Disposal

- In safety-related applications, please comply with the mission time T_M in the safety-related characteristic data.
- When decommissioning, please comply with local regulations regarding the disposal of electronic devices (e.g. Electrical and Electronic Equipment Act).

2.3 For your safety

WARNING!

Loss of safety function due to substituting an actuator from the interlocking and guard locking system

Substituting an actuator for an inappropriate actuator may lead to serious injury and death.

- You should prevent the interlocking and guard locking system from being manipulated with an inappropriate actuator.
- Keep the substitute actuator in a safe place and protect it from unauthorised access.
- If substitute actuators are used, these must be installed as described under Installation [30]
- If the original actuators are replaced with substitute actuators, the original actuators must be destroyed before disposal.

- Do not remove the connector's protective cap until you are just about to connect the unit. This will prevent potential contamination.

3 Overview

3.1 Unit features

- Safe guard locking for swing gates and sliding gates
- Safe interlocking (position monitoring)
- Transponder technology
- 2 safety outputs
- Safety Device Diagnostics (SDD)
  - Safety Device Diagnostics can be used to poll sensor information, to perform actions and to read configuration parameters
  - Manipulation protection in accordance with ISO 14119 (chap. 7.2.d) is possible by verifying the short name of the actuator through the controller via SDD communication
- Diagnostic input for Y1 for Safety Device Diagnostics (SDD)
- Signal output/diagnostic output Y32 for Safety Device Diagnostics
- Monitoring of shorts between the safety outputs
- Guard locking element keeps the safety gate from being opened unintentionally
- Auxiliary release for opening the safety gate
- 1 signal output
- Suitable for left and right hinged safety gates
- Pilz coding type: Coded
- M12, 8-pin male connector
- LEDs:
  - Supply voltage/fault
  - Status of actuator
  - Status of guard locking
  - Input lights up yellow (without function)
- The bolt in the actuator can be rotated 90° in the actuator housing before the actuator is installed. As a result, the actuator can be installed vertically or horizontally.
- The safety switch PSEN ml b 1.1 can be expanded using a stationary or external escape release (see Order reference: Accessories [📖 66]).

  The stationary escape release can be expanded by 25 mm max. two times.

  The external escape releases are available with push/pull cables between 1.5 and 4 m in length (grading 50 cm).

3.2 Scope of supply

- Scope of supply PSEN ml b 1.1
  - Safety switch PSEN ml b 1.1
  - Actuator

4 Function description

4.1 Structure

The interlocking and guard locking system prevents the safety gates to the danger zone from being opened while there is any hazard within the danger zone (machine movement, voltage, ...).

The safety outputs may have a high or low signal, depending on the position of the actuator and the signal path of safety inputs S31 and S41 (solenoid operation).

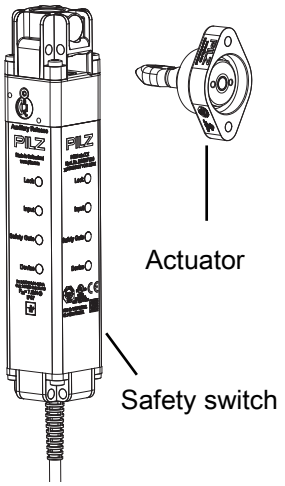	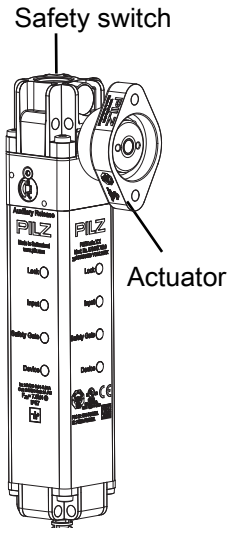
Gate open	Gate closed

Safety outputs 12 and 22

Under these conditions there is a high signal at safety outputs 12 and 22:

- Actuator is detected **and**
- Guard locking pin has successfully been activated (guard locking pin is in the locked position)

If one of these conditions is not met, the signal at the safety outputs will be low.

- Diagnostic input Y1

  If a fieldbus module of the SDD is used, the diagnostic input Y1 is automatically activated and data is read.

  If no fieldbus module of the SDD is used, the diagnostic input Y1 is not used.
- Signal output/diagnostic output Y32

  The status of the actuator is output. If a fieldbus module of the SDD is used, the signal output/diagnostic output for the writing of data is activated.

4.2 Activation of safety inputs S31 and S41 (solenoid operation)

- If there is a low signal at safety inputs S31 and S41, the guard locking pin does not change its position.
- Guard locking may only be deactivated once the hazardous movement has been completed.

Active use of Safety Device Diagnostics

- The safety inputs S31 and S41 have a high signal within max. 500 ms after the receipt of the guard locking activation.

Guard locking is activated through a high signal (length 350 - 400 ms) at inputs S31 and S41 (solenoid operation). After activation, the inputs must be low. Another pulse (length 350 - 400 ms) at these inputs deactivates guard locking.

4.2.1 Activation with specification of direction

- The guard locking is activated when the time between the rising edges from S31 to S41 is between 40 ms and 500 ms (S31 before S41).
- The guard locking is deactivated when the time between the rising edges from S31 to S41 is between 40 ms and 500 ms (S41 before S31).

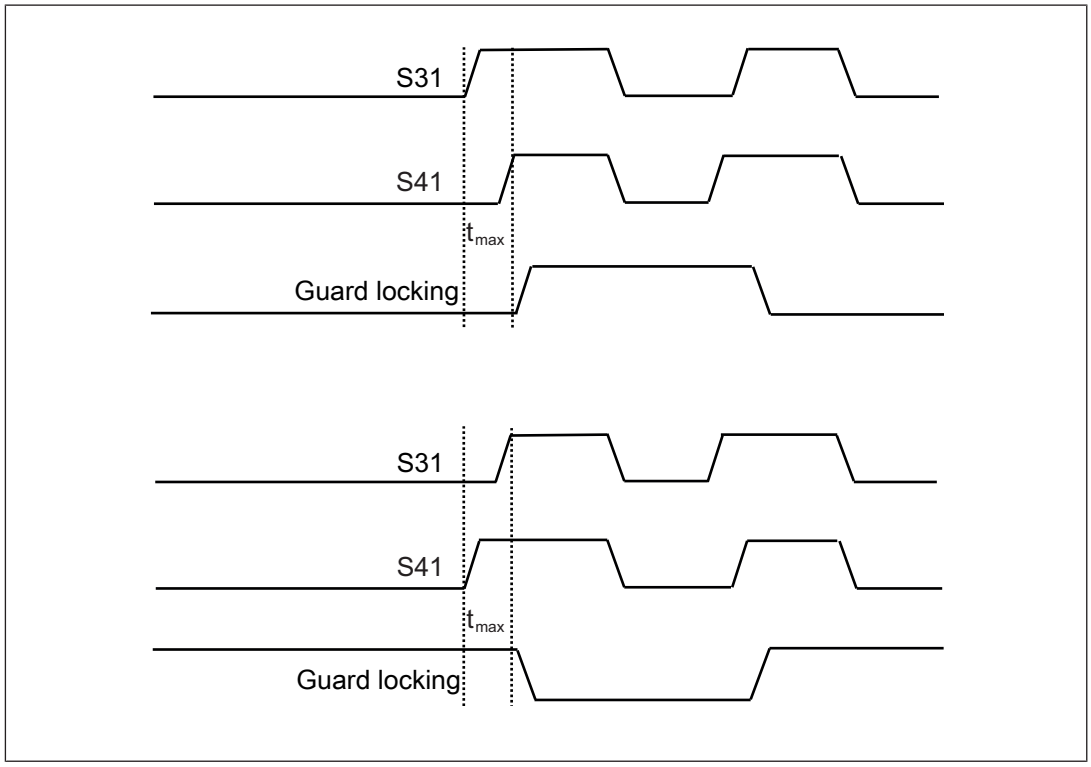

Legend

t_{max} Maximum time between the rising edges from S31 and S42

4.2.2 Activation without specification of direction

- The guard locking changes its state when the time between the rising edges from S31 and S41 < 20 ms.

4.3 Safety Device Diagnostics

Safety Device Diagnostics is an option that can be selected independently of the safety-related wiring.

When using the Safety Device Diagnostics, up to 16 sensors can be connected as a subscriber to a fieldbus module.

The communication of the sensors with the fieldbus module is automatically built up again with **each** new supply of the supply voltage. As a result, a sensor can be exchanged, e.g. when servicing, without the need for special measures.

An exchange can be detected via the fieldbus module e.g. through the serial number.

- With Safety Device Diagnostics there are the following diagnostic options for the fieldbus module:
  - Poll information of the sensors (examples: what sensor in the series has switched, at what point could there be an open circuit in the series connection)
  - Read configuration parameters of the sensor (examples: Number of teach-in processes remaining, serial number of the switch)
  - Perform actions (example: poll updated actuator name)
  - Selectively activate or deactivate guard locking of individual PSEN ml within a series connection

The results of the sensor diagnostics can be checked already during the installation phase via the display in the fieldbus module, without the need to connect the fieldbus module to the network.

- With Safety Device Diagnostics there are the following diagnostic options for the fieldbus module for simple wiring:
  - Information is passed on via the fieldbus module directly to the network
  - Mappings of the signal outputs to the sensor are automated by the SDD.

    This prevents wiring errors and an expansion or reduction of the sensors is possible without the need to change existing wiring.
  - Wiring in accordance with IP20: Rapid installation in the control cabined is enabled.

Further information on Safety Device Diagnostics can be found in Additional documents that apply [📖 9].

- Series connection of diagnostics with Safety Device Diagnostics

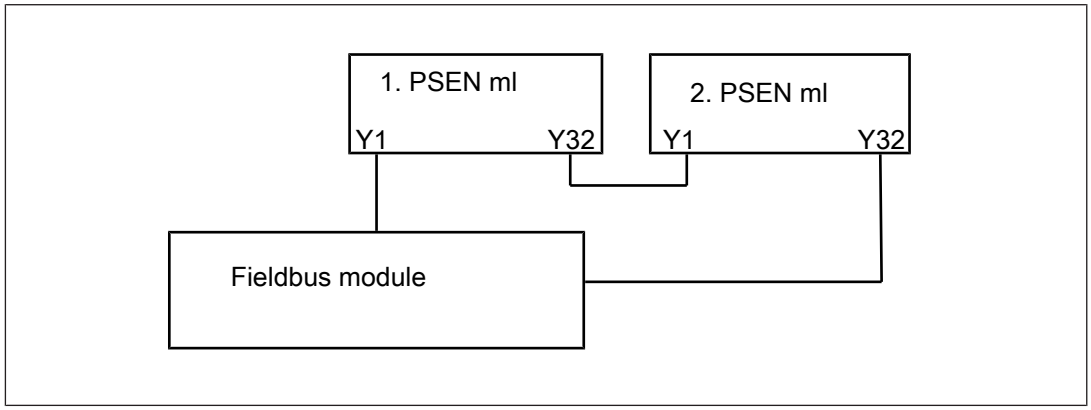

4.4 Operating modes

The safety switch can be used in various operating modes.

- Operation without safety device diagnostics
  - Standard operating mode

    After every restart the safety switch is in operation without Safety Device Diagnostics.
  - No communication with Safety Device Diagnostics
  - Activating/deactivating the guard locking is only via the signals S31 and S41
- Operation with passive use of the Safety Device Diagnostics
  - Safety switch supplies diagnostic data to Safety Device Diagnostics
  - Activating/deactivating the guard locking is only via the signals S31 and S41
- Operation with active use of the Safety Device Diagnostics
  - Activate/deactivate the guard locking by a combination of a Safety Device Diagnostics command and the status of the safety inputs S31 and S41 (S31 and S41 must have a high signal).

    The safety requirements are guaranteed by the signals S31 and S41 (the fieldbus for Safety Device Diagnostics communication is not safe).
- Operation with specification of direction when activating/deactivating he guard locking

  A specification of direction can be used to control the change of the guard locking status.
  - Toggling: The safety switch changes with each simultaneous controlling of S31 and S41 the guard locking status (activated <-> deactivated).
  - Force Direction: The safety switch is selectively activated or deactivated by offset activation of the rising edges of S31 and S41.

Timing diagrams

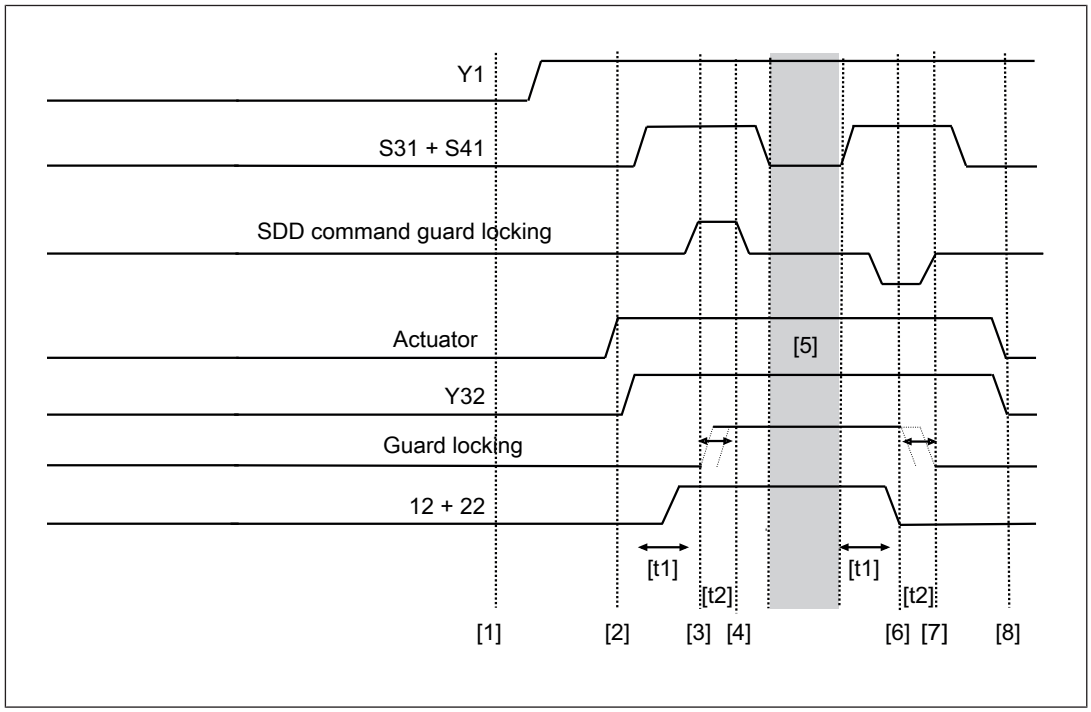

Fig.: Active use of Safety Device Diagnostics

Legend

[1] Gate is open

[2] Gate is closed

[3] Guard locking is activated by the safety control system

[4] Guard locking is activated

[5] Execution of the hazardous machine function is permitted

[6] Outputs will be deactivated

[7] Guard locking will be deactivated

[8] Gate is open

[t1] Processing time of guard locking signal = 100 ms

[t2] Time window for changing guard locking status

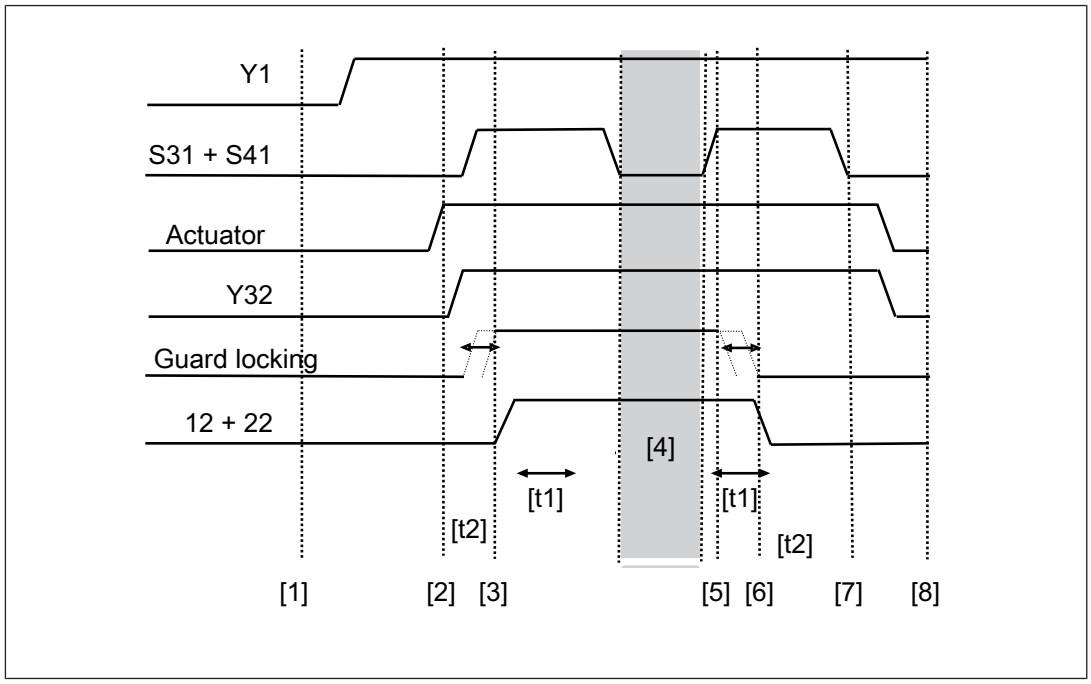

Fig.: Passive use of the Safety Device Diagnostics

Legend

[1] Gate is open

[2] Gate is closed

[3] Guard locking is activated

[4] Execution of the hazardous machine function is permitted

[5] Outputs will be deactivated

[6] Guard locking will be deactivated

[7] Gate is open

[t1] Processing time of guard locking signal = 100 ms

[t2] Time window for changing guard locking status

4.5 Block diagram

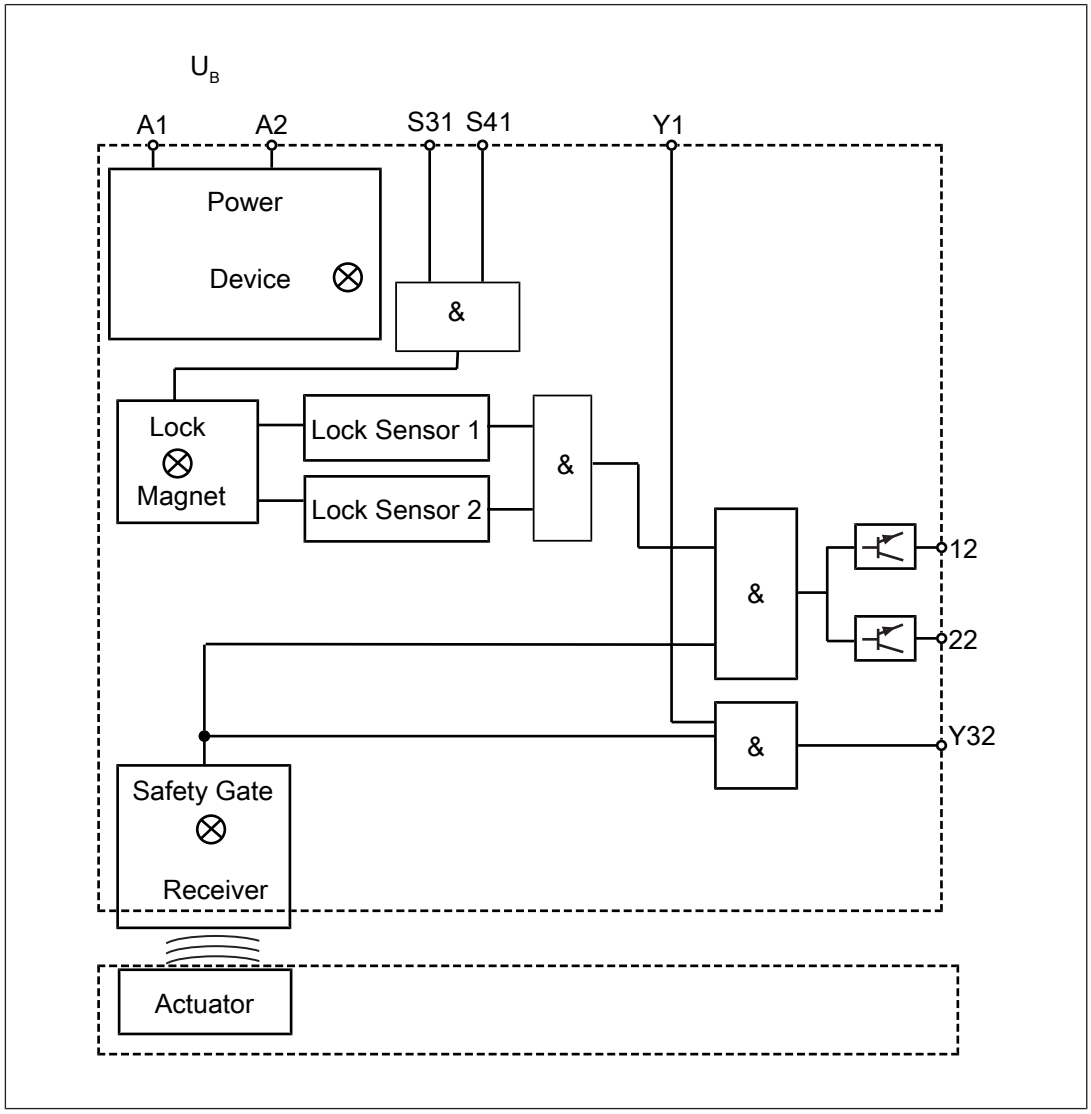

4.6 Auxiliary release

The auxiliary release enables guard locking to be opened from the access side to the danger zone.

The safety switch has auxiliary releases on three sides.

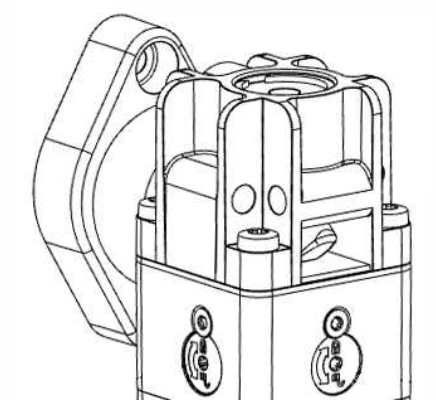

INFORMATION

If guard locking is deactivated using the auxiliary release, there is a low signal at safety outputs 12 and 22. An error code will be issued (see under Operation [📖 50]) and the safety switch switches to a fault condition.

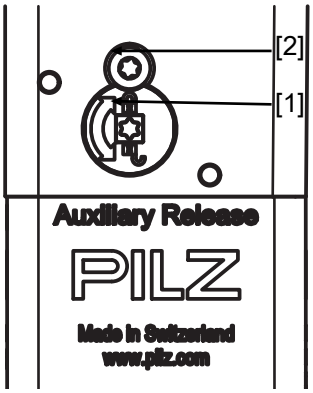

Legend

[1] Auxiliary release screw Torx T10

[2] Security screw Torx T10, sealed with varnish when delivered

Mode of operation:

1. Remove the security screw [2] using a Torx T10 screwdriver.
2. Rotate the auxiliary release screw [1] half a turn anti-clockwise using a Torx T10 screwdriver. The guard locking pin is displaced and the bolt is released.

   The safety gate to the danger zone can be opened.

4.6.1 Recommissioning

Recommission PSEN ml b 1.1

1. Rotate the auxiliary release screw [1] (see Figure [📖 19]) half a turn clockwise using a Torx T10 screwdriver.
2. Re-insert the security screw [2] (see Figure [📖 19]) using a Torx T10 screwdriver.
3. Seal the security screw with varnish.
4. Switch the voltage off and then on again.
5. Carry out a function test on the safety switch and actuator. The safety function may only be checked by qualified personnel.

INFORMATION

If the auxiliary release screw is not turned back correctly after use, the PSEN ml b 1.1 switches to a fault condition.

4.7 Prevent restart

To prevent the machine restarting (unintentionally) while there is someone inside the danger zone, a padlock can be attached via the through hole on the actuator (see diagram). As a result the actuator cannot engage with the safety switch, guard locking is not activated and the machine is prevented from starting.

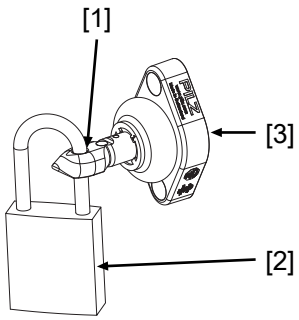

Legend

[1] Through hole on the actuator for attaching a padlock

[2] Padlock

[3] Actuator

If the actuator is to blocked using several locks in parallel, a multiple lock can be used (e.g. Brady – Lockout device, article no. 852439).

4.8 Escape release

Distinction between escape release and emergency release

- The emergency release enables the manual release of the guard locking without aids from outside the hazardous area.
- The emergency release enables the manual release of the guard locking without aids from within the hazardous area and it corresponds to an escape release in accordance with **EN ISO 14119.**

If the escape release accessory (stationary or external) is installed **within** the hazardous area, the accessory can be used as an escape release in accordance with EN ISO 14119.

If the escape release accessory (stationary or external) is installed **outside** the hazardous area, the accessory can be used as an escape release in accordance with EN ISO 14119.

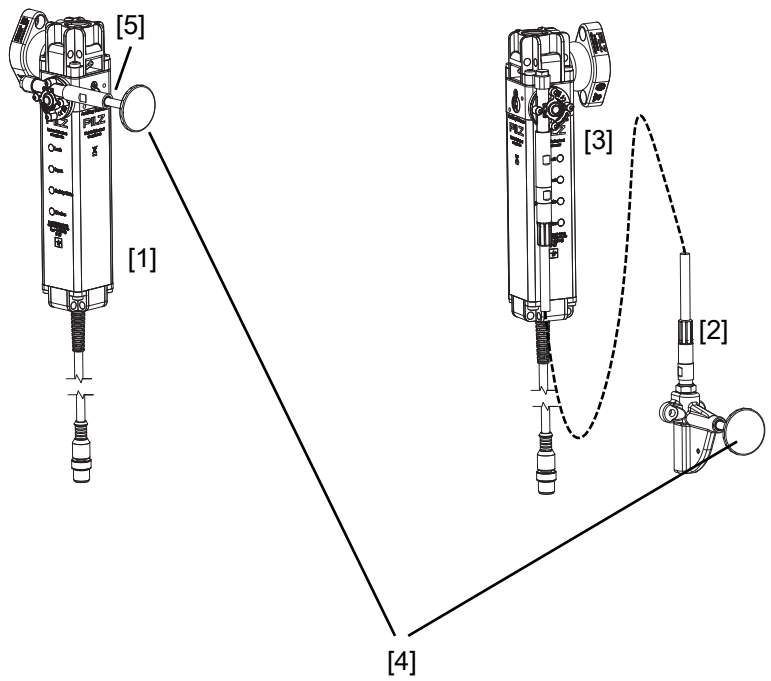

Legend

[1] Escape release stationary

[2] Escape release externally

[3] Tension pressure cables in lengths of 1.50 m to 4 m

[4] Button of the escape release pin

[5] Escape release pin

INFORMATION

If guard locking is deactivated using the auxiliary release, there is a low signal at safety outputs 12 and 22. An error code will be issued (see under Operation [📖 50]) and the safety switch switches to a fault condition.

Mode of operation

If in the hazardous area the button of the escape release pin [4] is pressed towards the safety gate, the escape release impacts directly on the auxiliary release of the safety switch and the auxiliary release unlocks the safety gate. The safety gate can be opened immediately, enabling the operator to leave the danger zone.

There is a low signal at safety outputs 12 and 22 if the escape release was operated.

Scope

- Scope of supply stationary escape release
  - 1 escape release stationary
  - 1 adapter disk
  - 2 screws for adapter disk
  - 4 screws for installation on the adapter disk
- Scope of supply external escape release
  - 1 escape release external with installed push/pull cables (see Order reference: Accessories [📖 66])
  - 1 adapter disk
  - 2 screws for adapter disk
  - 4 screws for installation on the adapter disk

4.8.1 Recommissioning

1. Pull back the button of the escape release pin.
2. Switch the voltage off and then on again.
3. Carry out a function test using the escape release. The safety function may only be checked by qualified personnel.

5 Wiring

5.1 Important information

- Hand-tighten the connector.
- Information given in the Technical details [📖 60] must be followed.

5.2 Pin assignment, connector and cable

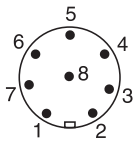	8-pin M12 connector

PIN	Function	Terminal designation	Cable colour (Pilz cable)
1	Operation of solenoid to open and close guard locking (channel 2)	S41	white
2	+24 V UB	A1	Brown
3	Safety output channel 1	12	Green
4	Safety output channel 2	22	Yellow
5	Signal output/diagnostic output	Y32	grey
6	Operation of solenoid to open and close guard locking (channel 1)	S31	Pink
7	0 V UB	A2	Blue
8	Diagnostics input	Y1	Red

NOTICE

The colour marking for the connection lead only applies for the cable that Pilz supplies as an accessory

5.3 EMC requirements

- Ensure the wiring and EMC requirements of EN 60204-1 are met.
- UL requirement: The supply voltage to the safety switch must be protected with a quick-acting fuse (see Technical details [📖 60]).
- The inputs and outputs of the safety switch must have a protective separation to voltages over 60 V AC.
- The power supply must meet the regulations for extra low voltages with protective separation (SELV, PELV) in accordance with EN 60204-1.

INFORMATION

Only use safety relays with a 24 VDC supply voltage. Safety relays with a wide-range power supply or in AC device versions have internal potential isolation and are not suitable as evaluation devices.

6 Connection to control systems and evaluation devices

6.1 Important information

Make sure that the selected evaluation device has the following properties:

- 2-channel with feasibility monitoring

  Both OSSDs must change switch state synchronously. In particular, the evaluation device must monitor that the state of **both** OSSDs was "Gate unlocked" before **both** return to the "Gate locked" state and vice-versa.
- OSSD signals are evaluated through 2 channels
- The state of the OSSDs must be tested before and after safety inputs S31 and S41 are activated (solenoid operation) (see Timing diagram [📖 16])

WARNING!

Potential loss of safety function due to failure to test for a safe condition

Depending on the application, serious injury or death may result.

- Use an evaluation device/safety system to test whether the plant is in a safe condition.
- Do not operate the solenoid of the PSEN ml b 1.1 via S31/S41 unless the plant is in a safe condition.

- The use of Safety Device Diagnostics is described in the System Description "Safety Device Diagnostics".

6.2 Minimum requirements for activation of guard locking

Use in PL e (Cat. 4) applications

- Safety inputs S31 and S41 (solenoid operation) have 2-channel operation via safe outputs, which are suitable for PL e (Cat. 4) applications
- 2-channel operation for safety inputs S31 and S41 (solenoid operation), each with 0.5 A
- 2-channel processing of safety outputs
- Monitoring of shorts across signal cables through activation of guard locking

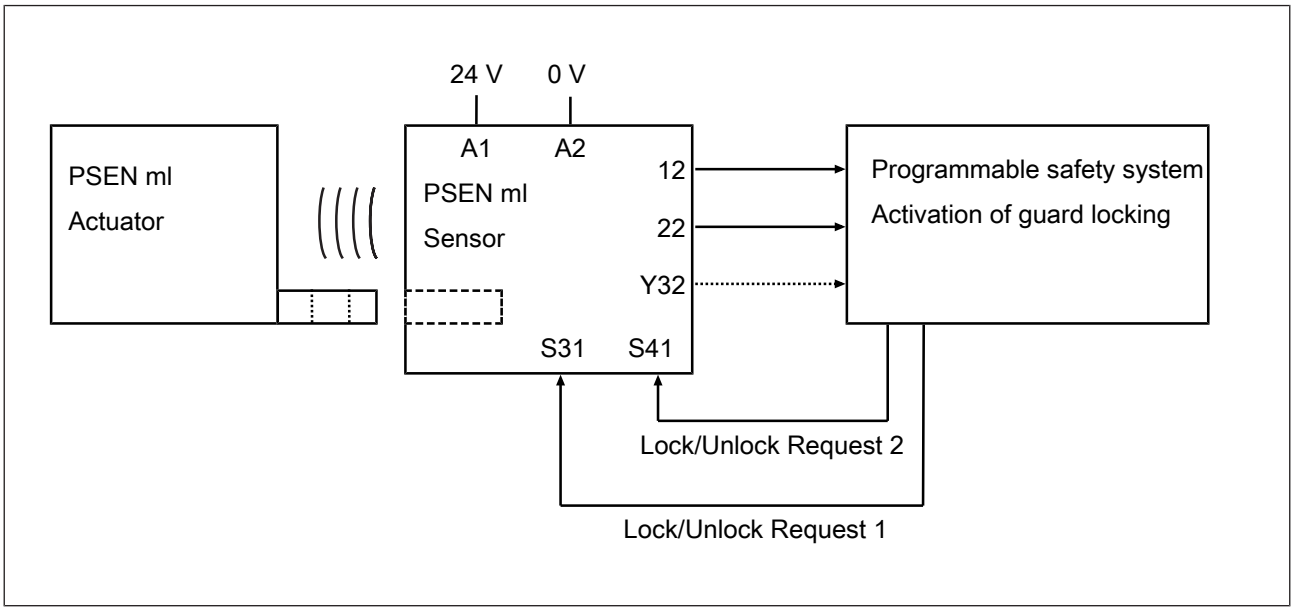

Use in PL d (Cat. 3) applications

- 2-channel operation for safety inputs S31 and S41 (solenoid operation) via relay outputs
- 2-channel operation for safety inputs S31 and S41 (solenoid operation), each with 0.5 A
- 2-channel processing of safety outputs
- Exclusion of shorts across signal cables through appropriate measures (e.g. protected cable layout, see EN ISO 13849-2)

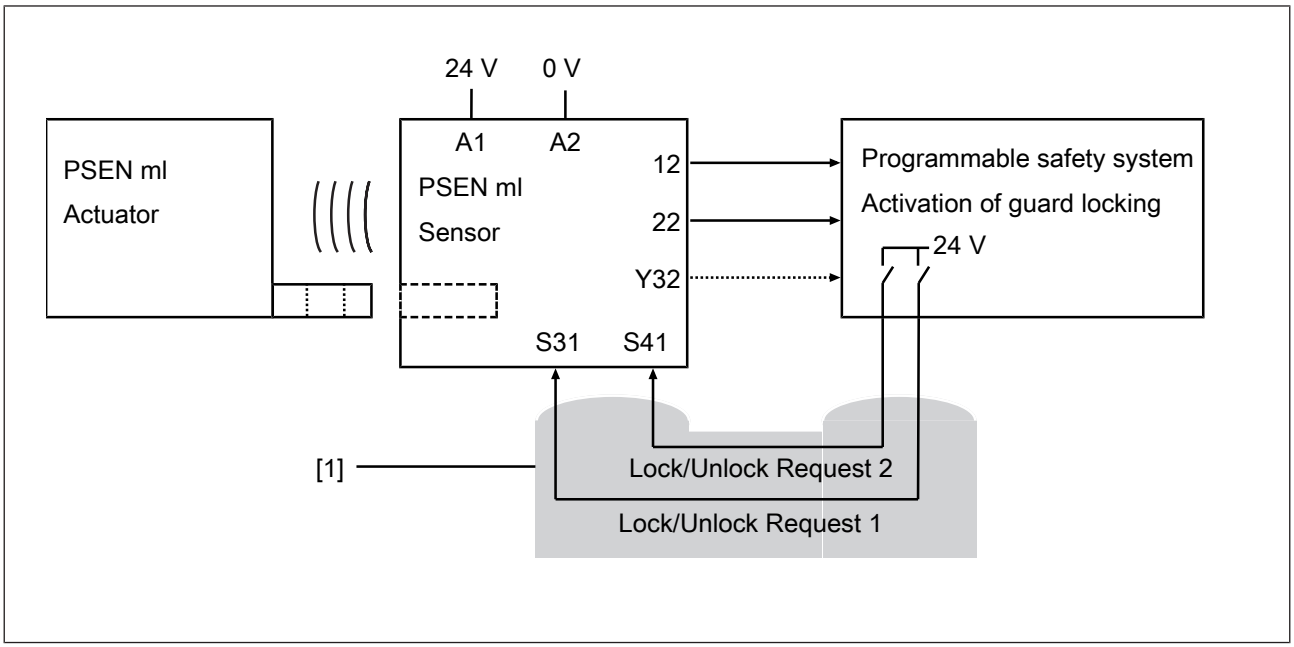

Legend

[1] Protected cable layout

Use in PL d (Cat. 2) applications

- 1-channel operation for safety inputs S31 and S41 (solenoid operation)
- 2-channel processing of safety outputs
- 1-channel operation for interconnected safety inputs S31 and S41 (solenoid operation), with 1 A

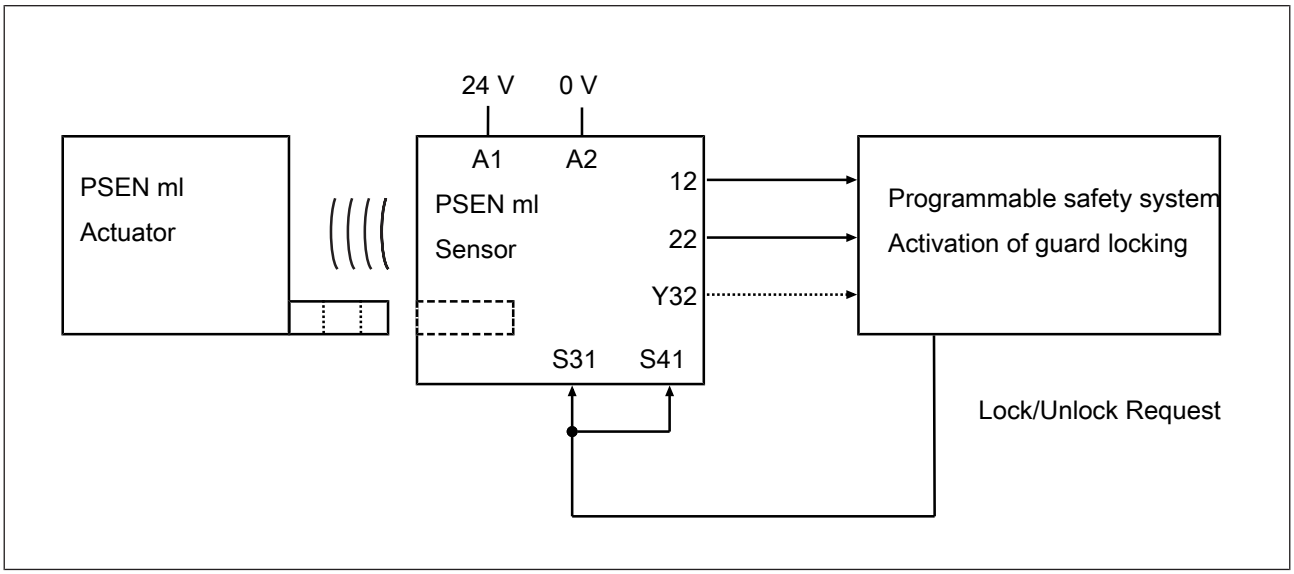

6.3 Single connection

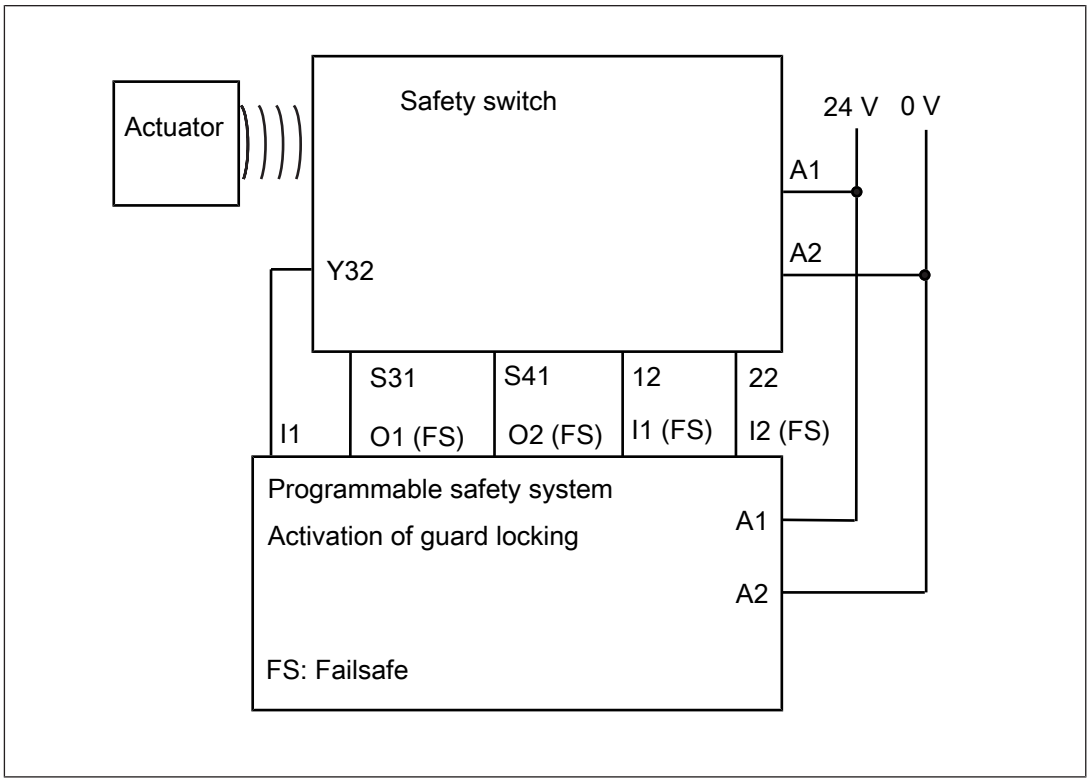

6.4 Connection to Pilz evaluation devices

The safety switch PSEN ml b 1.1 can be connected to Pilz evaluation devices, for example.

Suitable Pilz evaluation devices are, for example:

- PNOZmulti for safety gate monitoring
  Configure the switch in the PNOZmulti Configurator with switch type 3.
- PSS for safety gate monitoring with standard function block SB064, SB066 or FS_Safety Gate
- PSSuniversal PLC for safety gate monitoring with function block FS_SafetyGate

The correct connection to the respective evaluation device is described in the operating manual for the evaluation device. Make sure that the connection is made in accordance with the specifications in the operating manual for the selected evaluation device.

Connection to PNOZmulti is illustrated by way of example.

6.4.1 Connection example with PNOZmulti and Safety Device Diagnostics

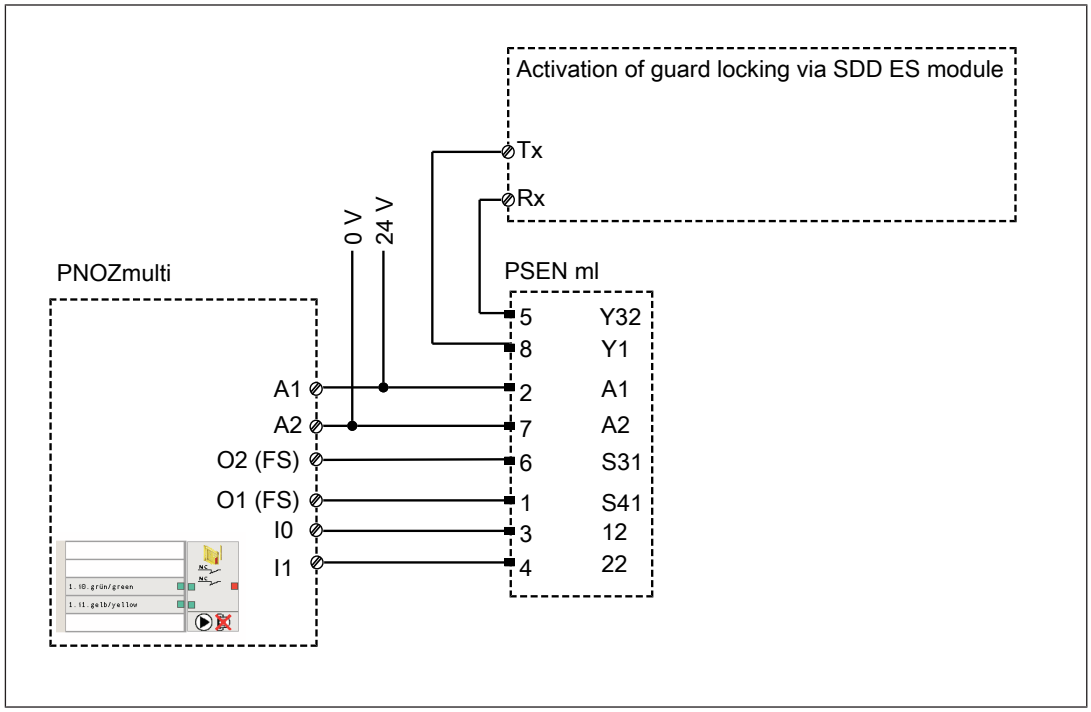

7 Teaching in the actuator

7.1 PSEN ml 1.1

Any corresponding Pilz actuator (see Technical Details [📖 60]) is detected as soon as it is brought into the response range.

8 Installation

8.1 Important information

INFORMATION

Refer to the guidelines for designing guards and integrating interlocks with guard locking in EN ISO 14120.

NOTICE

Install the safety switch and actuator so that the possibilities of defeat are reduced to a minimum (see guidelines for reducing the possibilities for defeating interlocking devices in EN ISO 14119).

NOTICE

Install safety switch and actuator so that it is not possible to reach through with hand or finger.

- The safety switch and actuator should be installed opposite each other in parallel.
- Make sure that the actuator makes complete contact with the mounting surface.
- Make sure that the at least one of the auxiliary release/escape releases can be operated after installation.
- For a minimum screw depth of 6 mm, M5 screws with resistance class 8.8 should be used to attach the safety switch and actuator.
- Torque setting: Please note the information provided under Technical details [📖 60].
- Use non-removable flat head locking screws to attach the safety switch and actuator (e.g. cheese-head or pan head screws) or rivets.
- Use the same type of screw to attach the safety switch and actuator.
- Installation of the safety switch and actuator must be concealed.
- Prevent self-loosening of the fastening elements on the safety switch and actuator,
  - On the safety switch: through torque (see Technical details [📖 60])
  - On the actuator: through torque (see Technical details [📖 60]) and bonded screw retention
- Make sure that the actuator does not present a risk.
- The mounting surfaces for safety switches and actuators can have a max. unevenness of 0.5 mm.
- Prevent the safety switch and actuator being exposed to heavy shock or vibration.
- The fastening of safety switch and actuator has to be sufficiently stable to ensure the proper operation of the safety switch and the actuator.

8.2 Tapped hole

- To fix the safety switch at the three possible mounting positions, there are 3 drill holes on 3 sides.

  As a result, the safety switch can be installed on the frames of left and right hinged sliding gates and swing gates. If necessary use a Mounting plate [📖 40] or Mounting bracket [📖 39] (see Order reference: Accessories [📖 66]).

  Different holding forces arise, based on the installation.

  – Fixing screws in parallel to actuator [📖 33]:

    Holding force F_{Zh} = 7.500 N,

    Holding force F_{1max} in accordance with EN ISO 14119 = 15.000 N

  – Fixing screws side-on to actuator [📖 33]:

    Holding force F_{Zh} = 5.000 N,

    Holding force F_{1max} in accordance with EN ISO 14119 = 10.000 N

> **INFORMATION**
>
> Please note that the stated holding forces only apply when installed without a mounting bracket. The holding forces when installed with a mounting bracket can be found in the table "Technical details for mounting bracket [📖 65]".

The tapped holes must have a depth of at least 6 mm.

Installation of safety switch	Tapped hole
Fixing screws in parallel/side-on to actuator, no mounting plate	Tapped holes for four M5 screws on the mounting surface.
Fixing screws in parallel/side-on to actuator, with mounting plate	Tapped holes for two M8 screws on the mounting surface, for attaching the mounting plate.

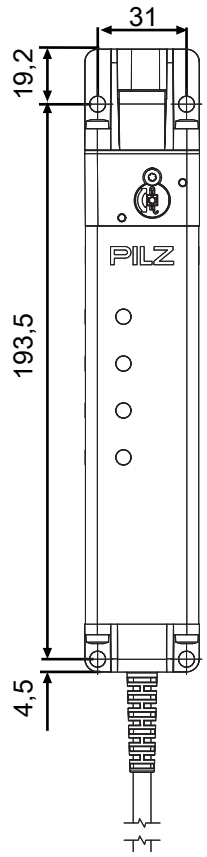

Fixing screws in parallel/side-on to actuator, no mounting plate

Provide the mounting surface with tapped holes as indicated.

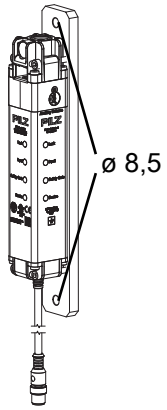

Fixing screws in parallel/side-on to actuator, with mounting plate

Provide the mounting surface with tapped holes as indicated.

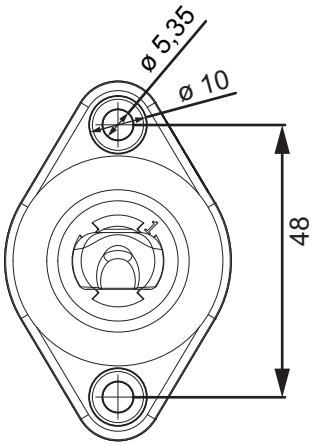

Actuator, no mounting bracket

Provide the mounting surface with tapped holes for two M5 screws (see diagram).

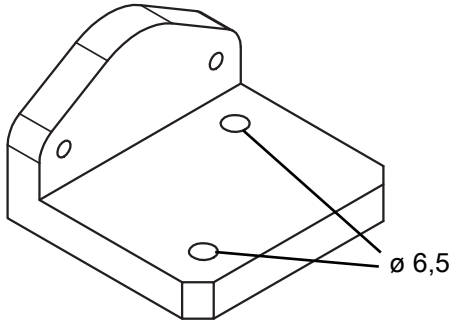	**Actuator, with mounting bracket** Provide the mounting surface with tapped holes for two M6 screws (see Dimensions). (Diagram: order no. 570 492 as example)

8.3 Install fixing screws in parallel to actuator

Use four M5 screws to attach the switch to the mounting surface.

- Torque setting: Please note the information provided under Technical details [📖 60].

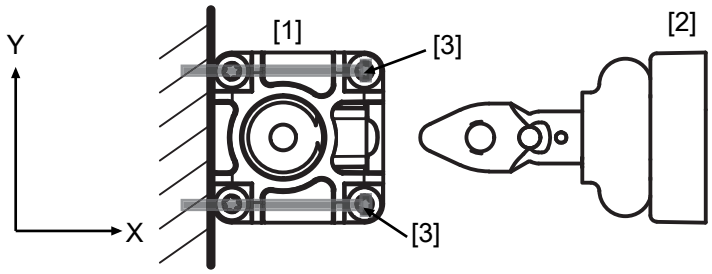

Fig.: Fixing screws of the safety switch in parallel to actuator

Legend

[1] Safety switch

[2] Actuator

[3] Fixing screws of the safety switch in parallel to actuator

8.4 Install fixing screws side-on to actuator

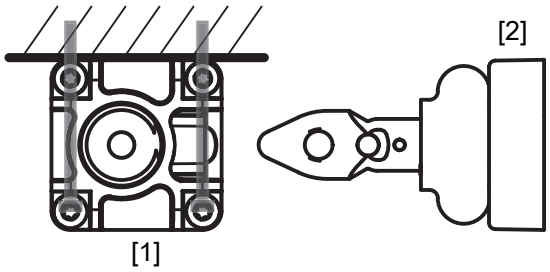	[1] Front of safety switch [2] Actuator

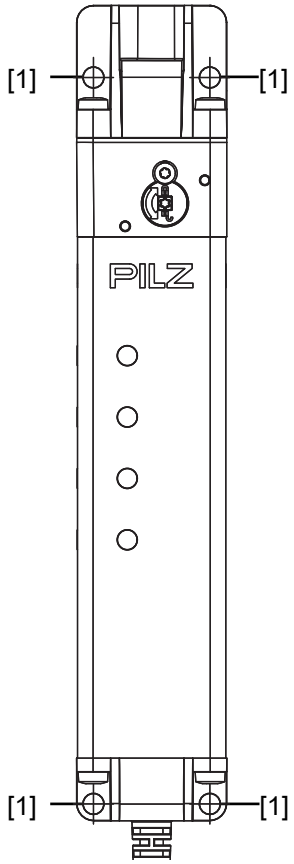	Use four screws [1] to fix the safety switch to the mounting surface. Fully tighten the four screws [1] on the safety switch. Torque setting: Please note the information provided under Technical details [📖 60].

8.5 Centre the bolt in the actuator housing

The bolt must be centred in the actuator housing in order to maintain the distances on settling gates.

Centre the bolt in the actuator housing (see diagram).

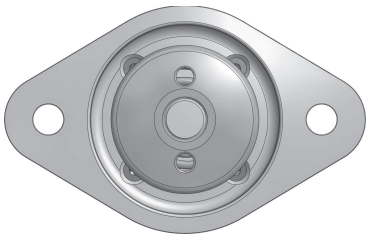	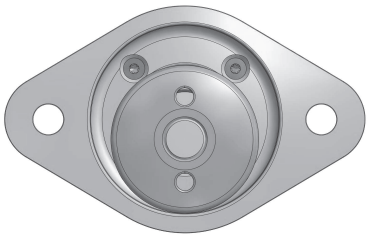
Bolt centred within the actuator housing	Bolt not centred within the actuator housing

8.6 Rotate the bolt in the actuator housing 90°

The actuator can be installed vertically on a gate (see Figure [📖 12]). To install the actuator horizontally, the bolt can be rotated 90° in the actuator housing prior to installation.

1. On the housing skin [3] in the actuator housing, press down the spring plate [1] on both sides of the bolt and keep the plate held down.
2. Rotate the bolt in the housing skin by 90° in the required direction ([2]).

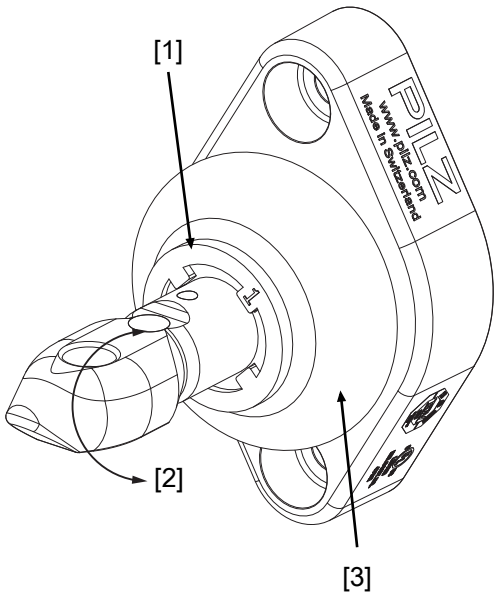

Legend

[1] Spring plate in the housing skin

[2] Bolt, can be rotated 90°

[3] Housing skin

3. Centre the bolt in the actuator housing [📖 35].

8.7 Installation on sliding gate

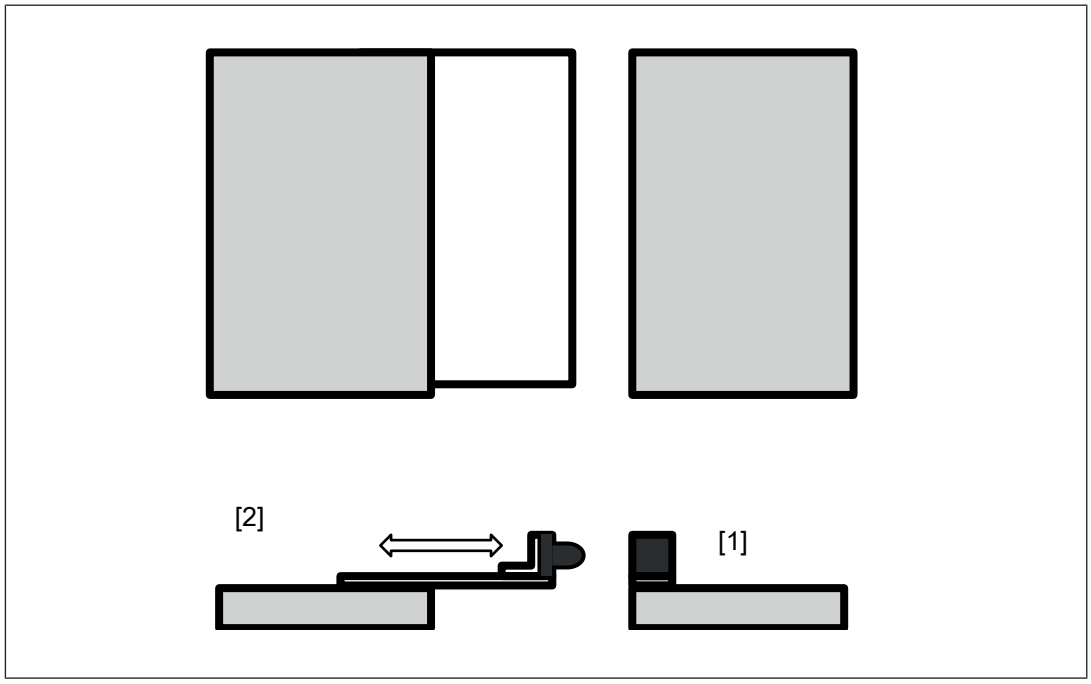

Legend

[1] Safety switch, installed on gate frame

[2] Actuator with mounting bracket (available as Accessory [📖 66]), installed on sliding gate

1. Install the safety switch with the fixing screws of the safety switch in parallel to the actuator [📖 33] or side-on to actuator [📖 33] on the gate frame.
2. Use two M5 screws to fix the actuator to the gate.

8.8 Installation on swing gate

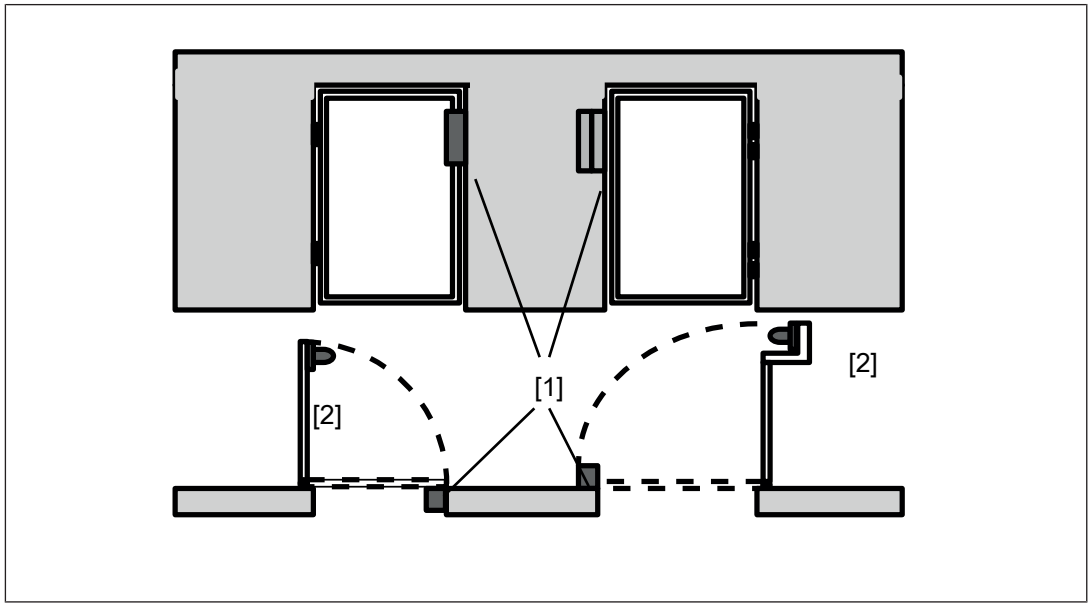

Fig.: Swing gate with internal and external hinge

Legend

[1] Safety switch on gate frame

[2] Actuator, installed on swing gate

1. Install the safety switch with the fixing screws of the safety switch in parallel to the actuator [📖 33] or side-on to actuator [📖 33] on the gate frame.
2. Use two M5 screws to fix the actuator to the gate.

The actuator should engage smoothly into the safety switch.

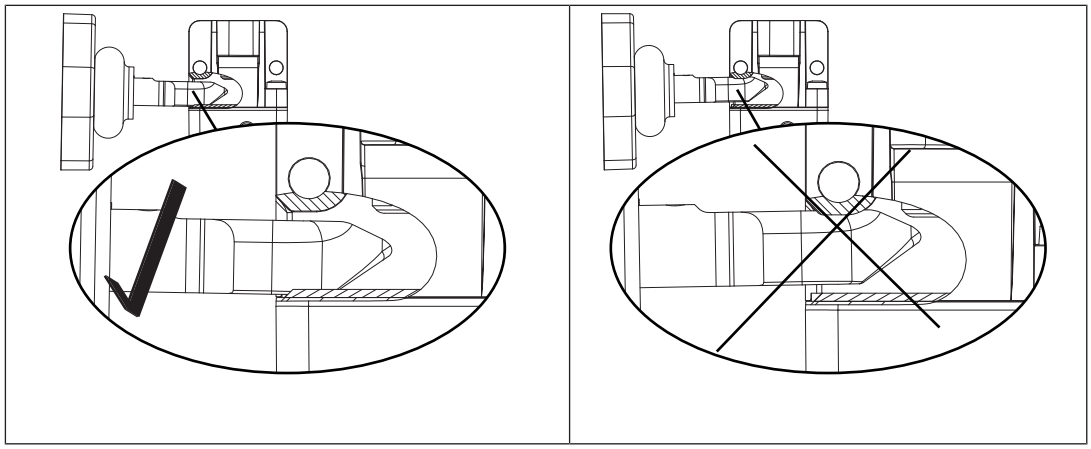

Install the safety switch horizontally at a swing gate

Please note:

Depending on the installation boundary conditions, a larger gate radius may be required (see diagram).

Please contact Pilz when smaller gate radiuses are required.

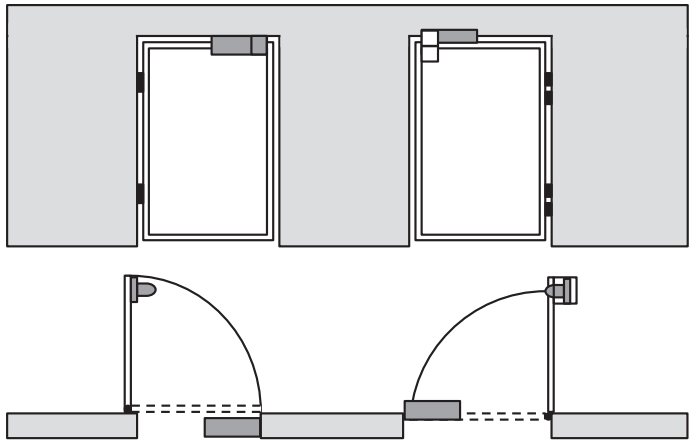

Make sure that a slight shift of the rotation point of the door is maintained when installing the actuator.

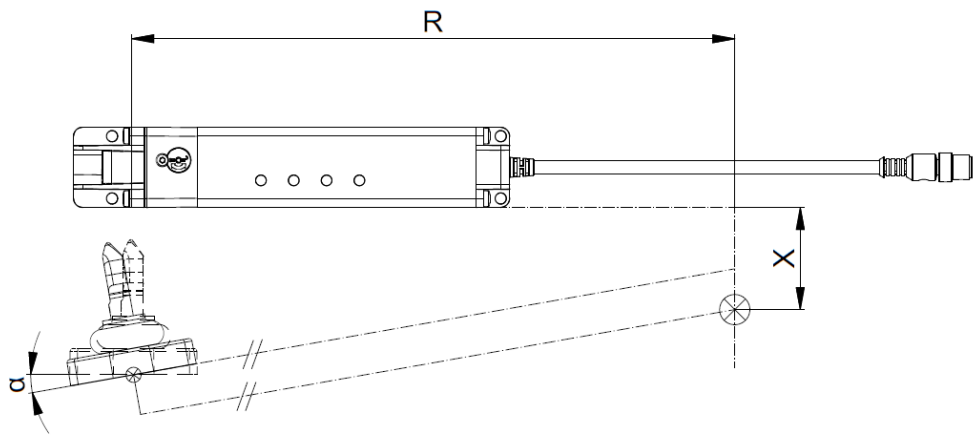

Legend

R The distance of the upper part of the safety switch from the rotation point of the door

X Parallel shift of the actuator

α Tilt angle when installing the actuator

- Tilt the actuator during installation by 10° in the following situations:
  - 50 mm < X < 75 mm **and** R < 600 mm
  - X < 50 mm **and** R < 500 mm

8.9 Installation with mounting bracket

1. Use two M6 screws to fix the mounting bracket to the gate. The position of the drill holes can be taken from the section entitled Dimensions.
2. Use two M5 screws to fix the actuator to the mounting bracket.

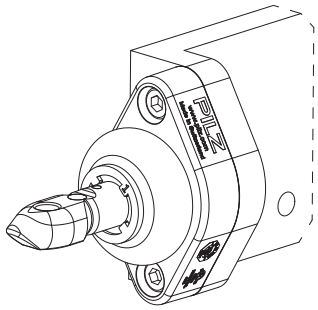

Fig.: Actuator, installed on mounting bracket

8.10 Installation with mounting plate

1. Attach the mounting plate to the swing gate/sliding gate.
2. Use four M5 screws to fix the safety switch [📖 33] to the mounting plate.

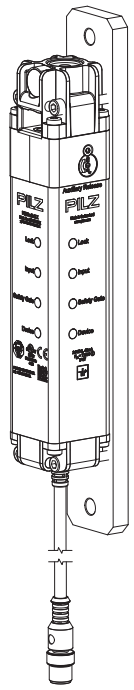

Fig.: Safety switch, installed on mounting plate

8.11 Installing the escape release

8.11.1 Important information

WARNING!

Loss of safety function due to the incorrect installation of the escape release!

If the button of the escape release pin is accessible from the outside, the guard locking device can be released from the outside and the safety gates opened, although the hazardous machine is switched on.
Depending on the application, serious injury or death may result.

The escape release should be installed so that it is only accessible from inside the danger zone.

- The button of the escape release pin must be impossible to reach from a position outside the protected area.
- Make sure that the escape release cannot be operated unintentionally.

- Prevent the effect of transverse forces on the escape release.
- Secure the screw joints with a with a threadlocker.
- Ensure that the button of the escape release pin is clearly visible and that is it not covered.
- Make sure that the min. bending radius of the push/pull cable of 60 mm is maintained when using the external escape release.
- Make sure that the button of the escape release pin does not present a risk.
- The mounting surface has to completely cover the bottom of the escape release housing. The bottom of the escape release housing must not be accessible after installation.

8.11.2 Installation positions for escape release

The stationary escape release can be installed on the three auxiliary releases in three different directions each.

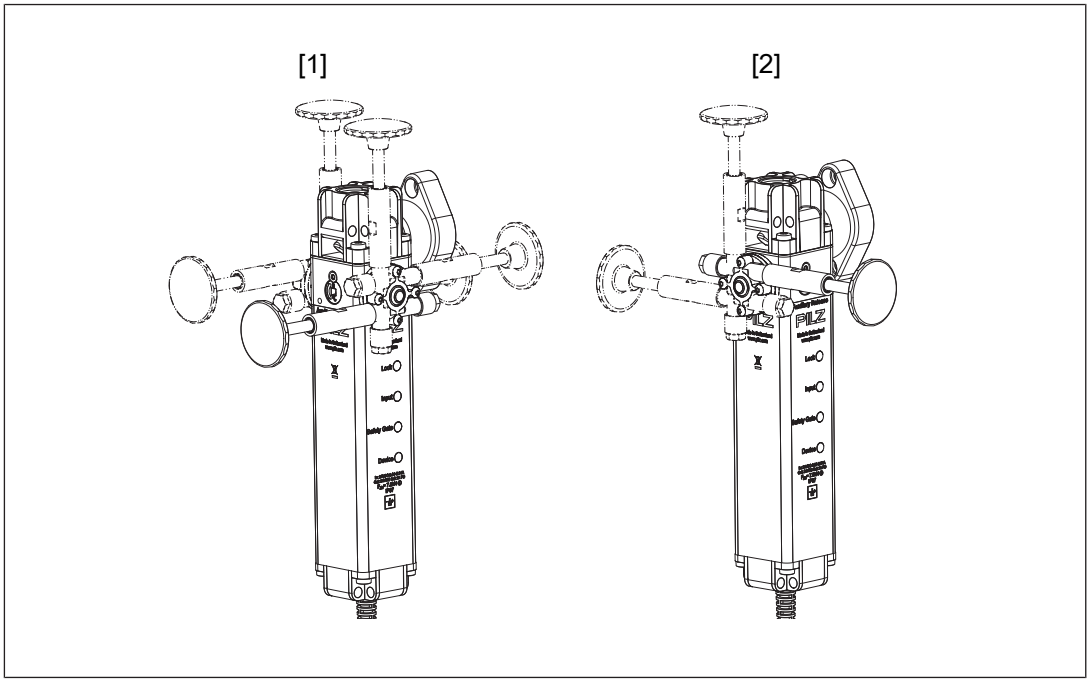

Legend

[1]	Installation options at the sides
[2]	Installation options at the back

The external escape release can be installed on the three auxiliary releases in four different directions each. The push/pull cable can be led out on different sides.

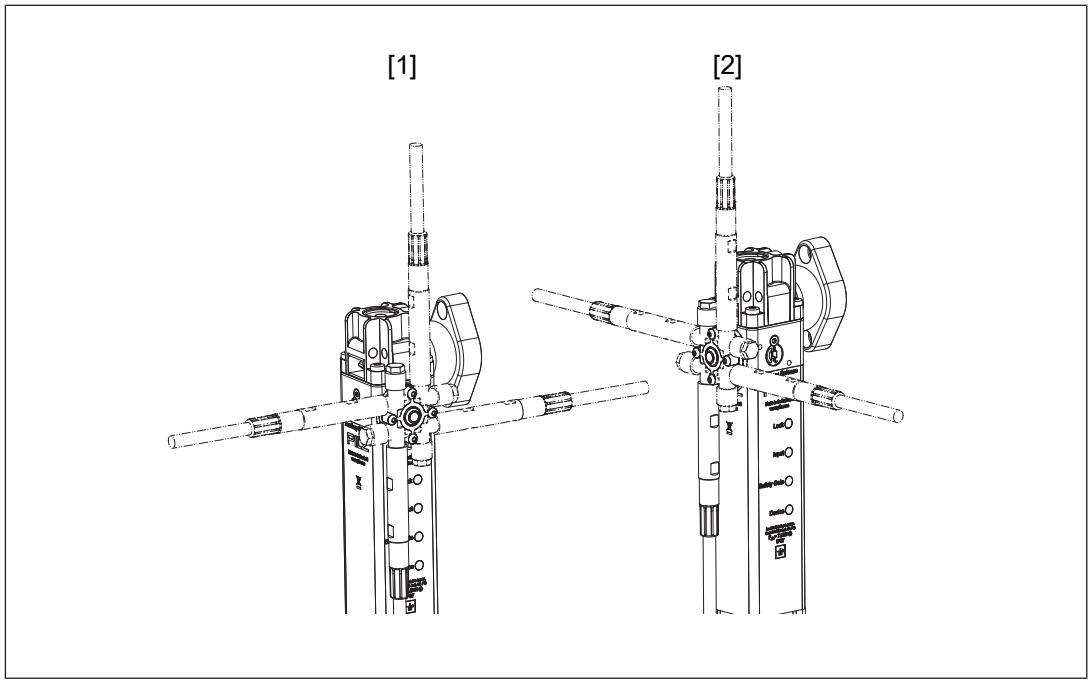

Legend

[1]	Installation options at the sides
[2]	Installation options at the back

8.11.3 Installation stationary escape release

1. Remove the security screw [1] using a Torx T10 screwdriver T10.
2. Screw the adapter disk of the escape release with the two hexagon sockets M3x8 [3] on the safety switch with 1,2 - 1,5 Nm (see diagram). Make sure that the pin of the adapter disk [2] is at the place where the security screw of the auxiliary release [1] used to be.

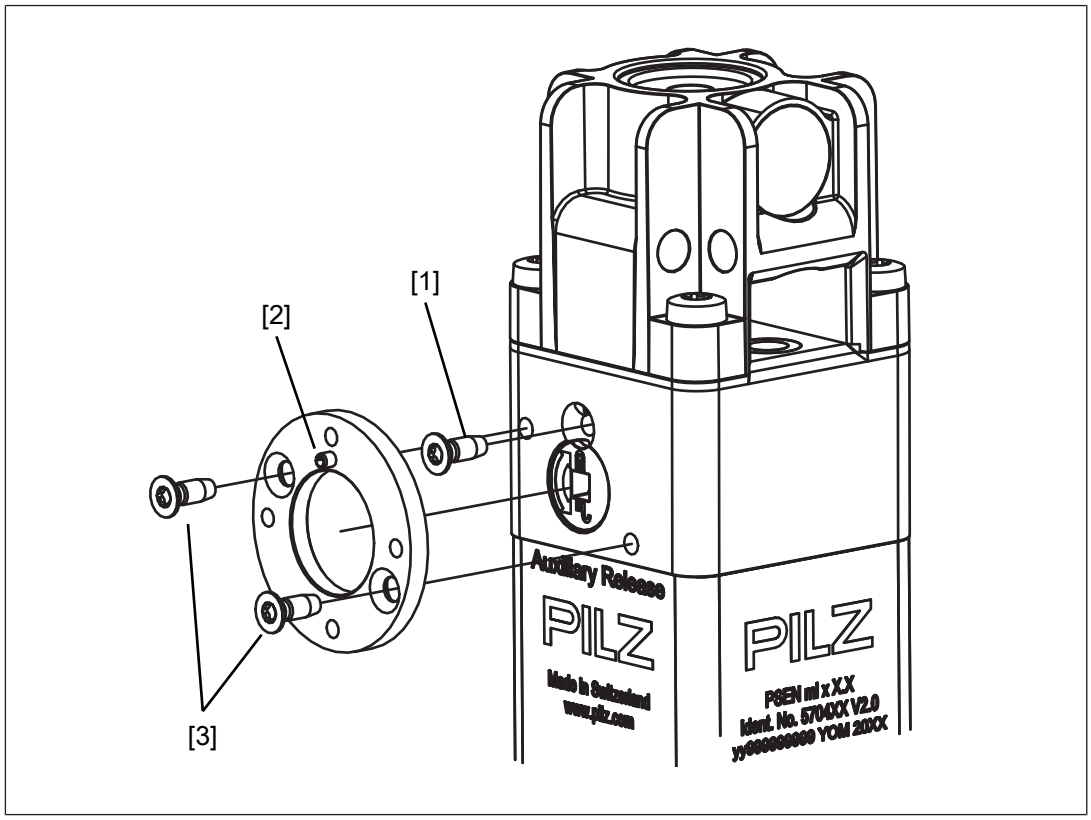

Legend

[1] Security screw of the auxiliary release

[2] Pin in the adapter disk

[3] Hexagon sockets M3x8

3. Screw the escape release with the 4 raised head screws M3x12 to the adapter disk with 1,2 - 1,5 Nm (see diagram).

- The button of the escape release pin can be removed for the installation (e.g. when the escape release pin is to be run through a wall). The button of the escape release pin must be secured again with a threadlocker and hand-tightened after escape release installation is complete
- To bridge larger distances the escape release pin can be extended by a max. of 25 mm two times (see Order reference: Accessories [📖 66]).

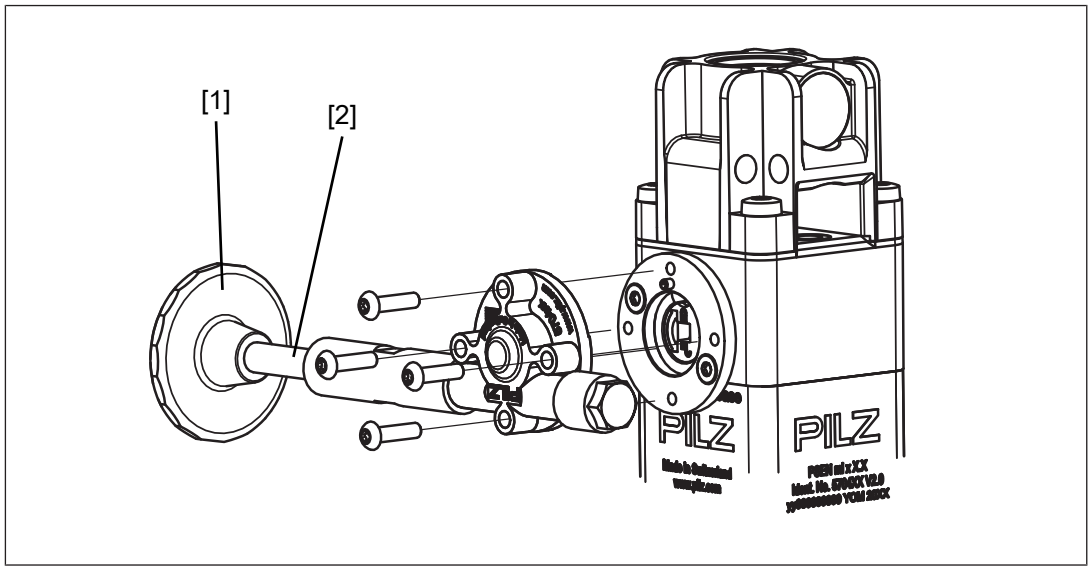

Legend

[1] Button of the escape release pin

[2] Escape release pin

8.11.4 Installation external escape release

1. Remove the security screw [1] using a Torx T10 screwdriver T10.
2. Screw the adapter disk of the escape release with the two hexagon sockets M3x8 [3] on the safety switch with 1,2 - 1,5 Nm (see diagram). Make sure that the pin of the adapter disk [2] is at the place where the security screw of the auxiliary release [1] used to be.

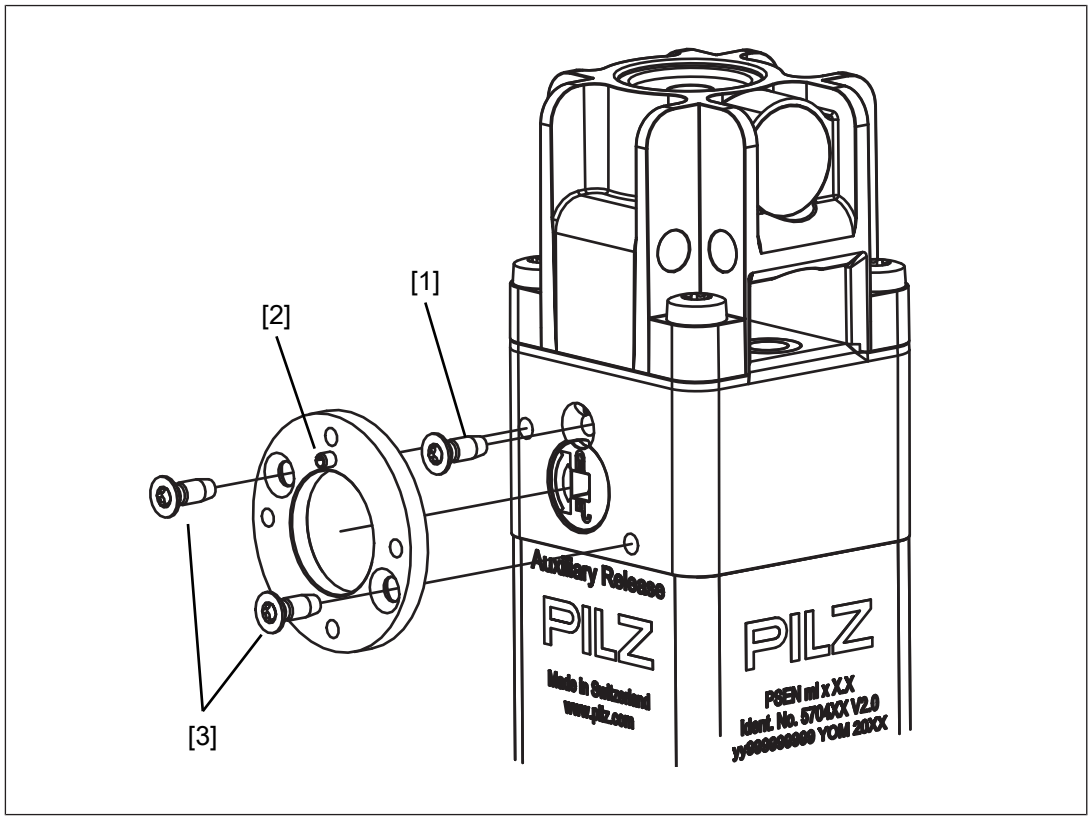

Legend

[1] Security screw of the auxiliary release

[2] Pin in the adapter disk

[3] Hexagon sockets M3x8

3. Screw the escape release with the 4 raised head screws M3x12 to the adapter disk with 1,2 - 1,5 Nm (see diagram).

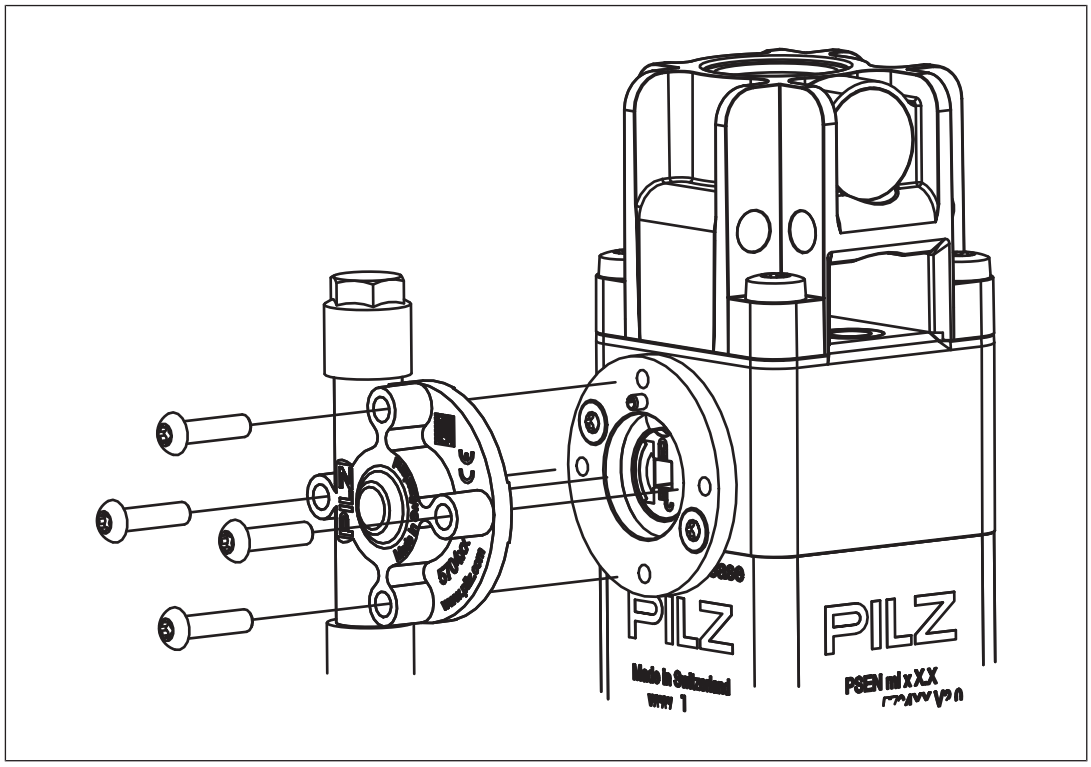

4. Screw the housing of the escape release with the screws [1] to a mounting surface with 6 - 6,5 Nm (see diagram).

- The screws of the push/pull cable [2] can be loosened to make installation easier (e.g. when the push/pull cable is to be run through a wall). The screws must be fixed with 6 - 6,5 Nm after the escape release is installed.

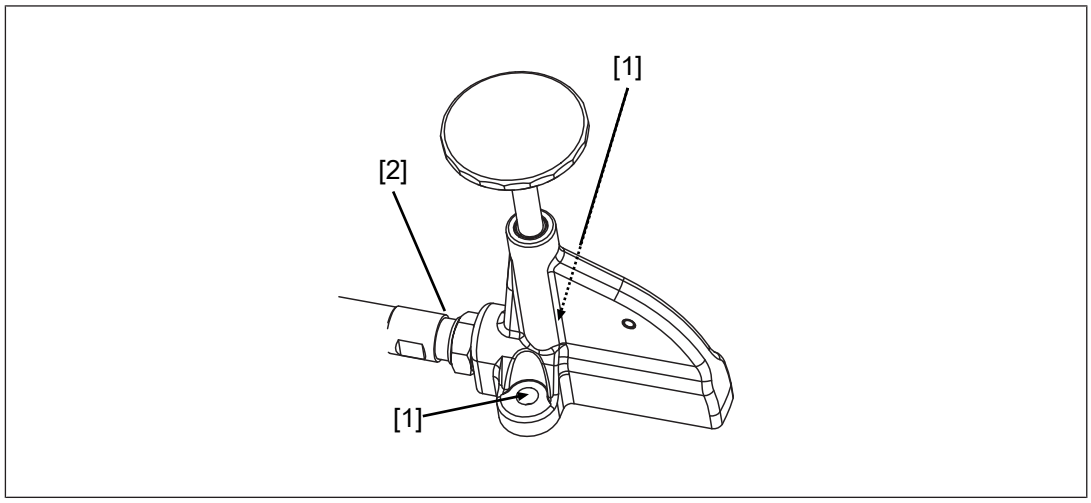

Legend

[1] Screwing the escape release to the mounting area

[2] Screwing the cable

8.11.5 Uninstalling the escape release

If the push/pull cable is to be run through a conduit pipe, the cable has to be uninstalled at the escape release first.

Prerequisites

- The conduit pipe must have a diameter of at least 12 mm.

Procedure:

1. Lift off the cover [1] (e.g. with a screwdriver with a flat blade).

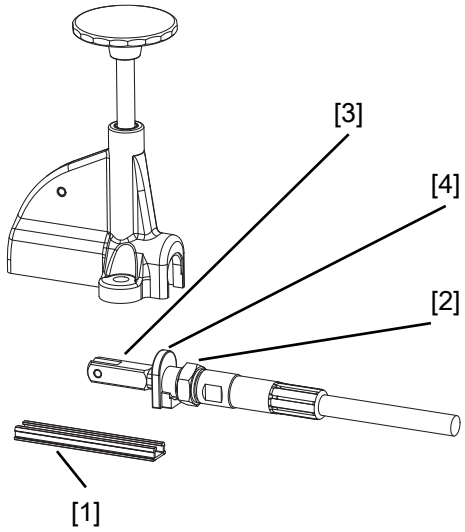

Legend

[1] Cover
[2] Nut M10 x 0,75
[3] Fork head
[4] Slot nut

2. Loosen the nut [2].
3. Pull out the push/pull cable with the slot nut [4] and remove the slot nut and the nut [2] from the cable.
4. Run the cable through the conduit pipe.
5. Push the nut [2] and the slot nut [4] over the fork head [3] back on the cable.
6. Push the cable with the fork head [3] on the fork in the escape release. The slot nut [4] must be fitted into the nut again.
7. Tighten the nut [2] with 6 - 6,5 Nm.
8. Put the lid [1] back on.

9 Adjustment

Please note:

- Safety switch and actuator must be aligned correctly
- Distances are maintained as stated in the following diagram
- Actuator is centred (see Centre bolt in actuator housing [📖 35])
- Always test the function with a connected evaluation device.
- When installing an external or stationary escape release, check the function of the escape release with a connected evaluation device.

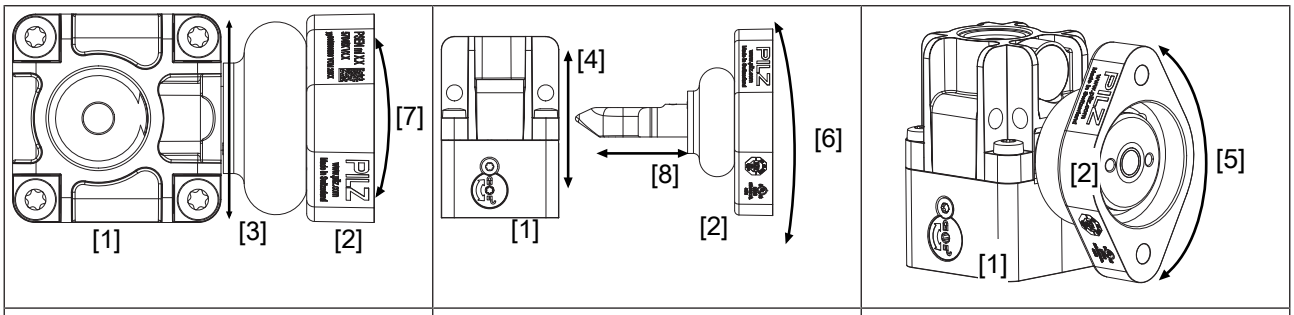

View from above	View from the side	Perspective view

[1]	Safety switch	
[2]	Actuator	
[3]	Max. lateral offset	+/-3,0 mm
[4]	Max. vertical offset	+/-3,0 mm
[5]	Max. angular offset around the X axis	+/-2,0 deg
[6]	Max. angular offset around the Y axis	+/-2,5 deg
[7]	Max. angular offset around the Z axis	+/-7,5 deg
[8]	Max. offset in closing direction	+/-2 mm

Attach safety switch and actuator

Once the safety switch and actuator are correctly aligned, the actuator's screw connection must be tightened.

1. Tighten up one M5 screw.
2. For applications with increased safety requirements (e.g. SIL CL 2 PL d), swap the second M5 screw for an M5 locking screw.
3. Tighten up the M5 screw or M5 locking screw.

   Please note the max. torque setting stated in the Technical details [📖 60].

10 Operation

NOTICE

The safety function should be checked after initial commissioning and each time the plant/machine is changed. The safety functions may only be checked by qualified personnel.

Status indicators:

- "Device" LED illuminates green: The unit is ready for operation
- "Safety Gate" LED lights up yellow: Actuator is within the response range
- "Lock" LED lights up green: Guard locking active
- "Input" LED lights up yellow: The unit is ready for operation

Legend:

●	LED off
☼	LED on
◐	LED flashes (500 ms on, 500 ms off)
◐ϟ	LED flashes quickly (50 ms on, 950 ms off)
◐ϟϟ	LED flashes very quickly (25 ms on, 475 ms off)

10.1 Normal mode

LED status				Switch status
Device	Safety Gate	Input	Lock	
☼ Green	◐ Yellow	◐ Yel-low	◐ Green	PSEN ml b 1.1 is started
☼ Green	●	☼ Yel-low	●	Safety gate open, actuator not de-tected, guard locking deactivated
☼ Green	☼ Yellow	☼ Yel-low	●	Safety gate closed, actuator detec-ted, guard locking deactivated
☼ Green	☼ Yellow	☼ Yel-low	☼ Green	Safety gate closed, actuator detec-ted, guard locking activated

Warnings

LED status				Switch status	Remedy / measure
Device	Safety Gate	Input	Lock		
Green	Yellow	Yellow	Green	Safety gate closed, actuator detected, guard locking cannot be activated / deactivated	Check the actuator's alignment [48] to the safety switch.
				The supply voltage to safety inputs S31 and S41 was switched back on before the auxiliary release screw was turned back.	Turn back the auxiliary release screw and then switch the supply voltage on (see Recommissioning [20]).
Yellow	Display not definitive	Yellow	Display not definitive	Safety switch active despite over or undervoltage	Check the supply voltage. If safety inputs S31 and S41 are activated or deactivated while an undervoltage warning is present, the safety switch switches to a fault condition.

10.2 Error display

LED status				Switch status	Remedy / measure
Device	**Safety Gate**	**Input**	**Lock**		
Red	Yellow	Yel-low	Display not definitive	Safety switch de-activated due to under or over-voltage	Check the supply voltage and switch the supply voltage off and then on again.
Red	Previous LED display is retained		Display not definitive	Safety outputs in fault condition	Check the wiring and switch the supply voltage off and then on again.
Red	●	●	●	Auxiliary release/ escape release activated	▸ Auxiliary release: Turn back the auxiliary release screw and then switch the supply voltage on (see Recommissioning [📖 20]). ▸ Escape release: Pull the button of the escape release pin back again and then switch on the voltage supply again (see Re-commissioning under escape release [📖 22]).
				Error	Please contact Pilz.
Red	Display not definitive			Safety switch does not start	Change the safety switch.
Green	Yellow	Yel-low	Display not definitive	Wrong actuator	Use the actuator PSEN ml 1.1.

11 Checks and maintenance

Regular inspection of the switch function is required to guarantee the trouble-free, long-term function.

If the interlock and guard locking system is only used rarely (opening and closing the safety gate and activating/deactivating the guard locking device), a manual function test is required.

The correct function of the device should be checked at regular intervals and after each error.

Test intervals in accordance with EN ISO 14119:

- for SIL CL 3/PL e at least 1x per month
- for SIL CL 2/PL d at least 1x per year

The Appendix contains a Check list [📖 69], which should help you perform the test.

Visual inspection:

- Check that the seal on the security screw on the auxiliary release is intact. If the seal is not intact, make sure that the security screw is inserted and use varnish to seal the security screw.
- Check the safety switch and actuator for damage.
- Make sure that the safety switch and actuator are firmly secured.
- Check the offset of the safety switch and actuator.
  - Max. lateral offset
  - Max. angular offset
  - Max. vertical offset
- Check that the wiring is correct.
- Remove any dirt from the safety switch and actuator.

Function test

- The actuator is detected and at the safety outputs 12 and 22 there is a high signal after detection of the actuator.
- The guard locking device can be activated/deactivated when the safety inputs S31 and S41 are activated.
- Under these conditions there is a high signal at safety outputs 12 and 22:
  - Actuator is detected **and**
  - Guard locking pin has successfully been activated (guard locking pin is in the locked position)

  If one of these conditions is not met, the signal at the safety outputs will be low.

Escape release

- Test whether the button of the escape release pin can be detected and reached.
- Check the function of the escape release.

12 Dimensions

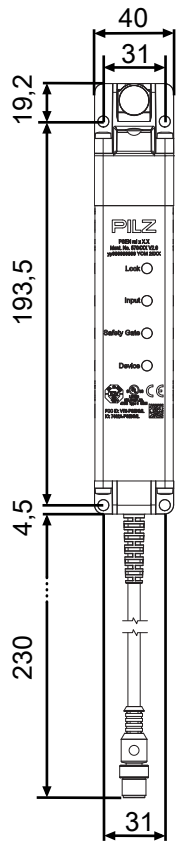

Safety switch

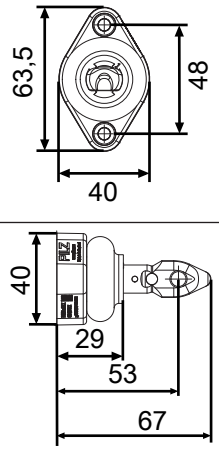

Actuator

Distance between safety switch mounting surface and actuator mounting surface

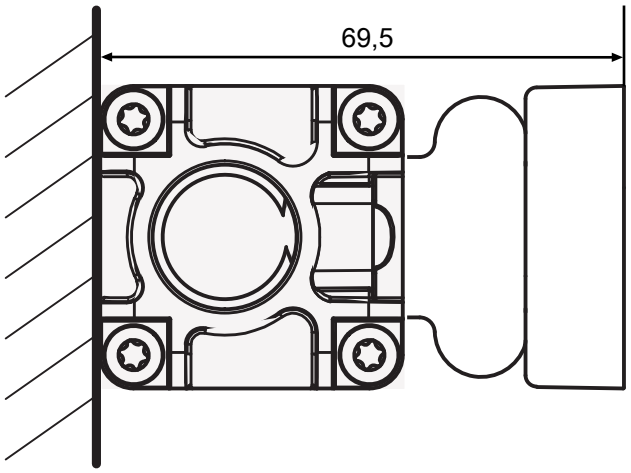

Mounting plate (see Accessories [📖 66])

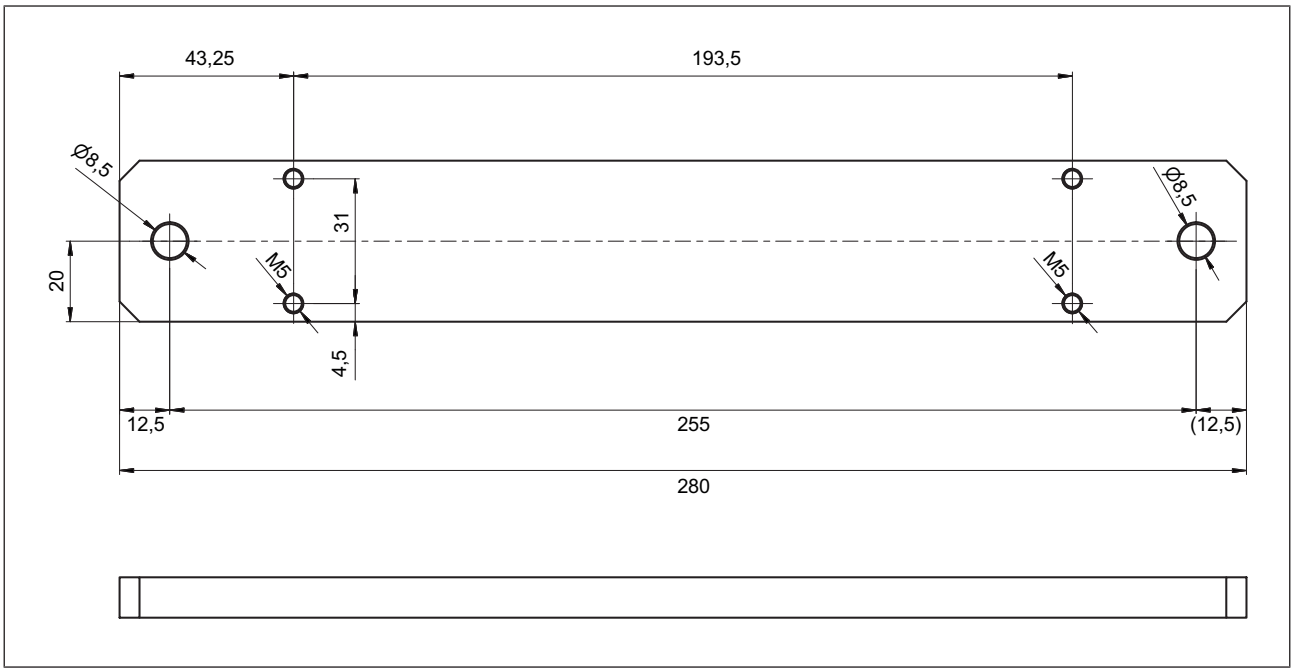

Fig.: Order no.: 570 490

Mounting bracket for sliding gate (see Accessories [📖 66])

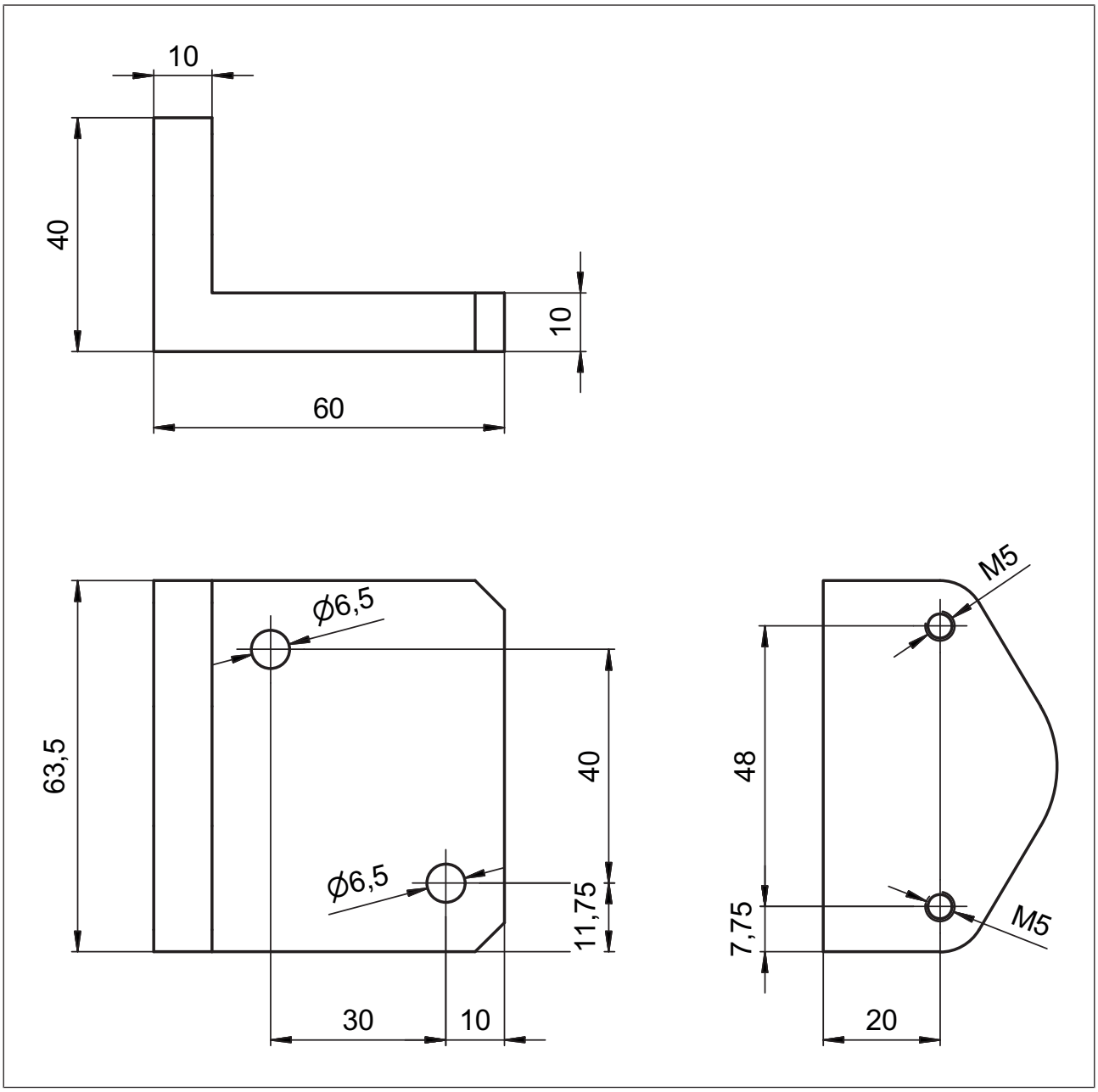

Fig.: Order no.: 570 492

Mounting bracket for swing gate (see Accessories [📖 66])

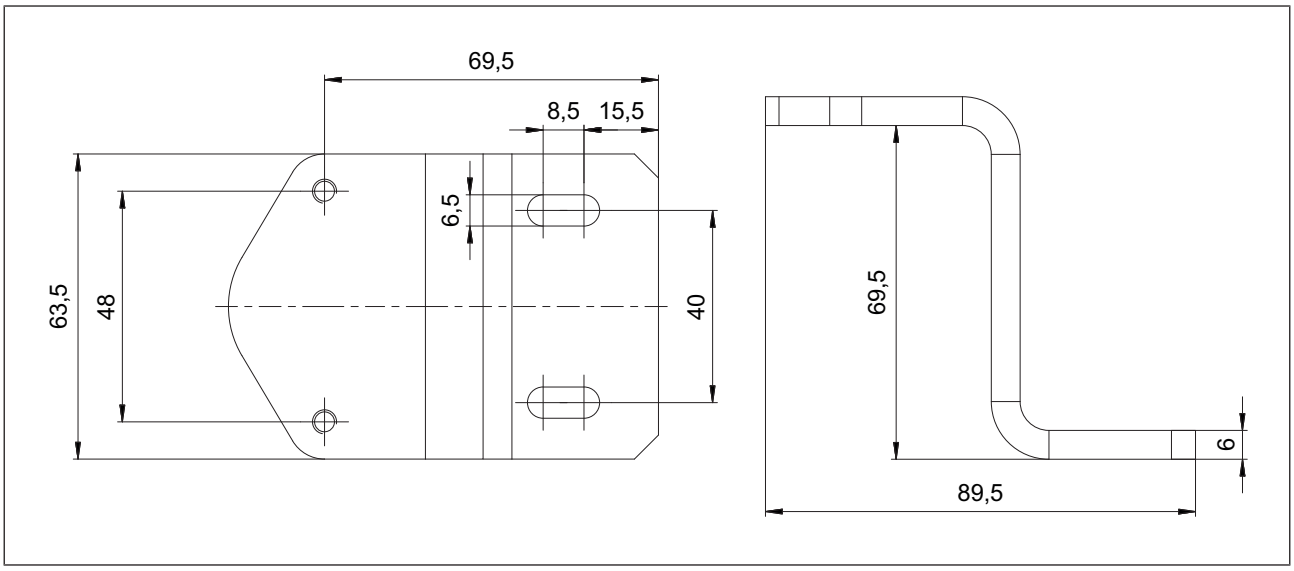

Fig.: Order no.: 570 493

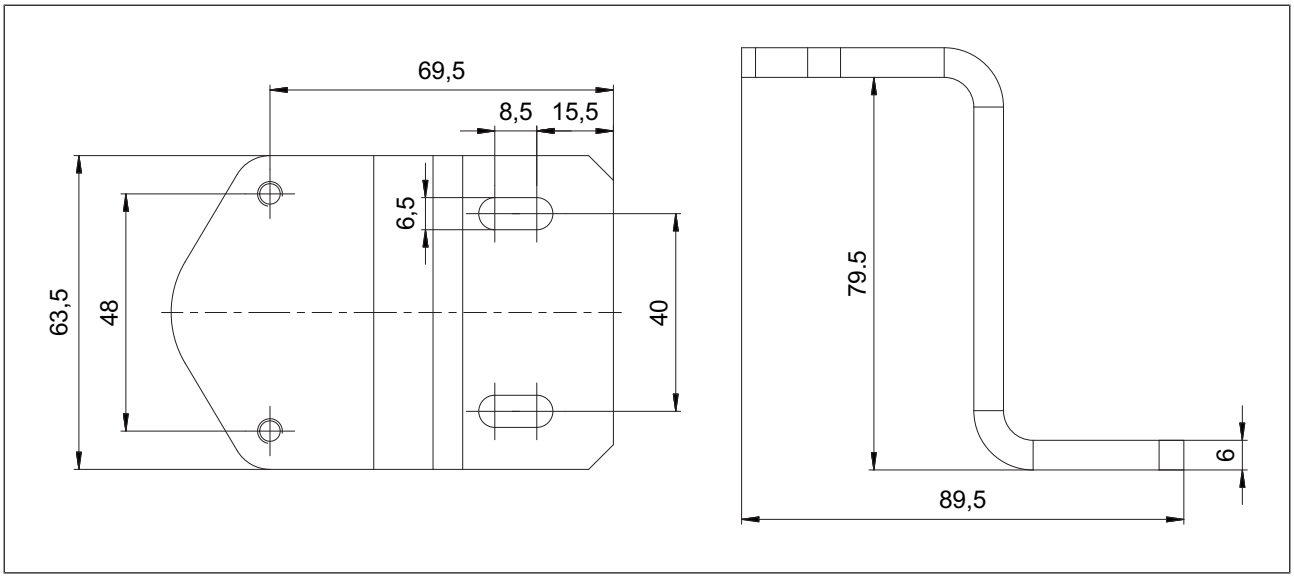

Fig.: Order no.: 570 494

Mounting bracket with handle unit for sliding gate (see Accessories [📖 66])

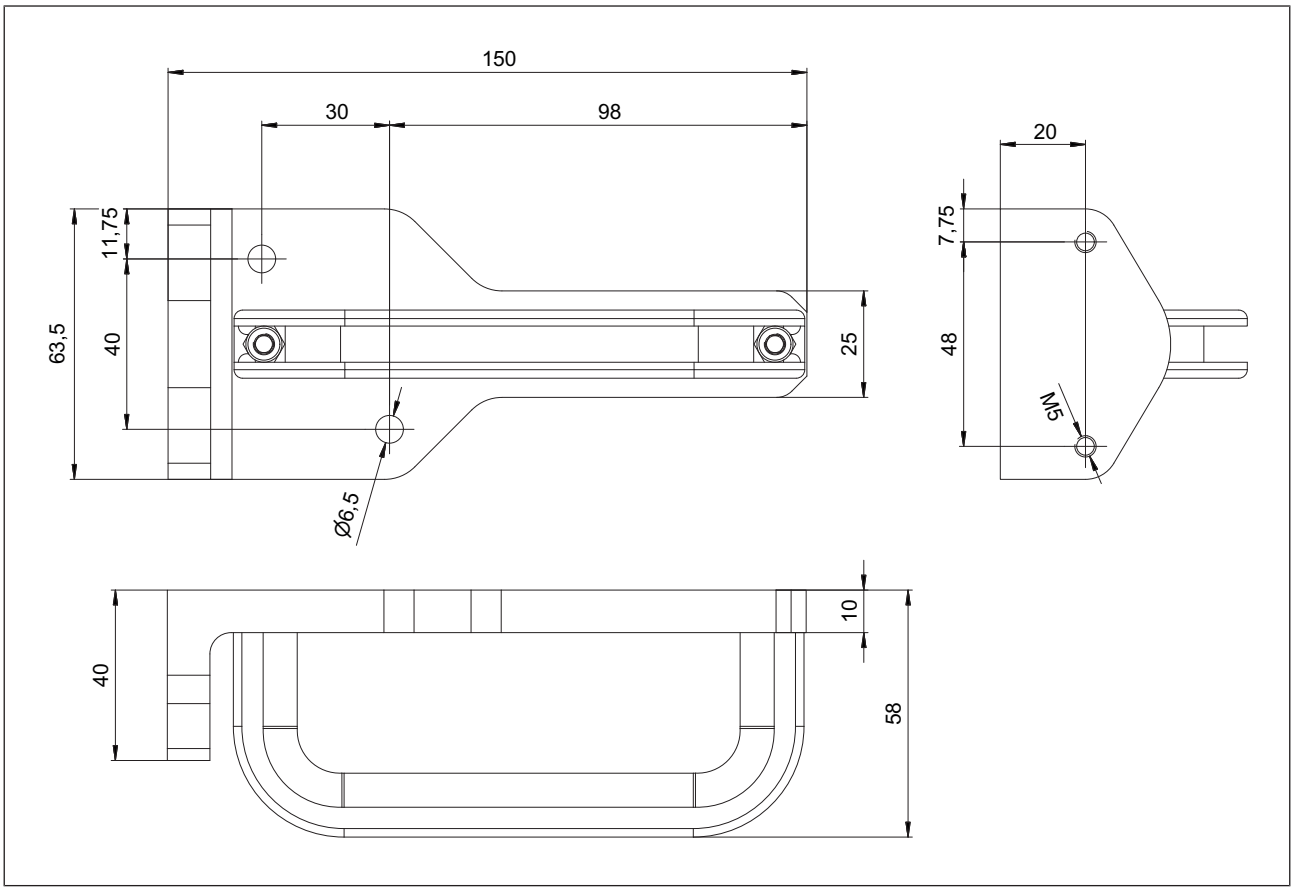

Fig.: Order no.: 570 495

Mounting bracket with handle unit for swing gate (see Accessories [📖 66])

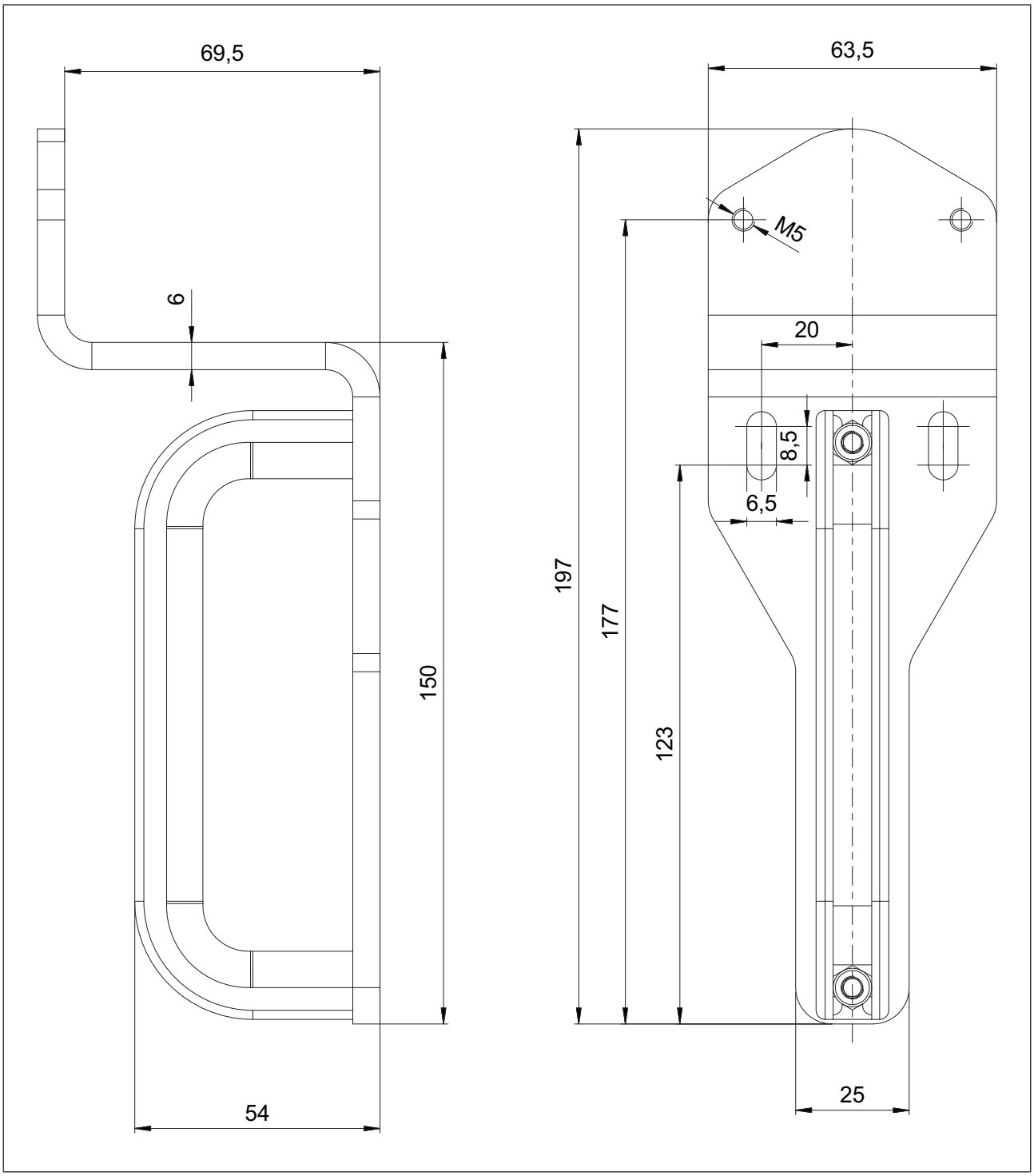

Fig.: Order no.: 570 496

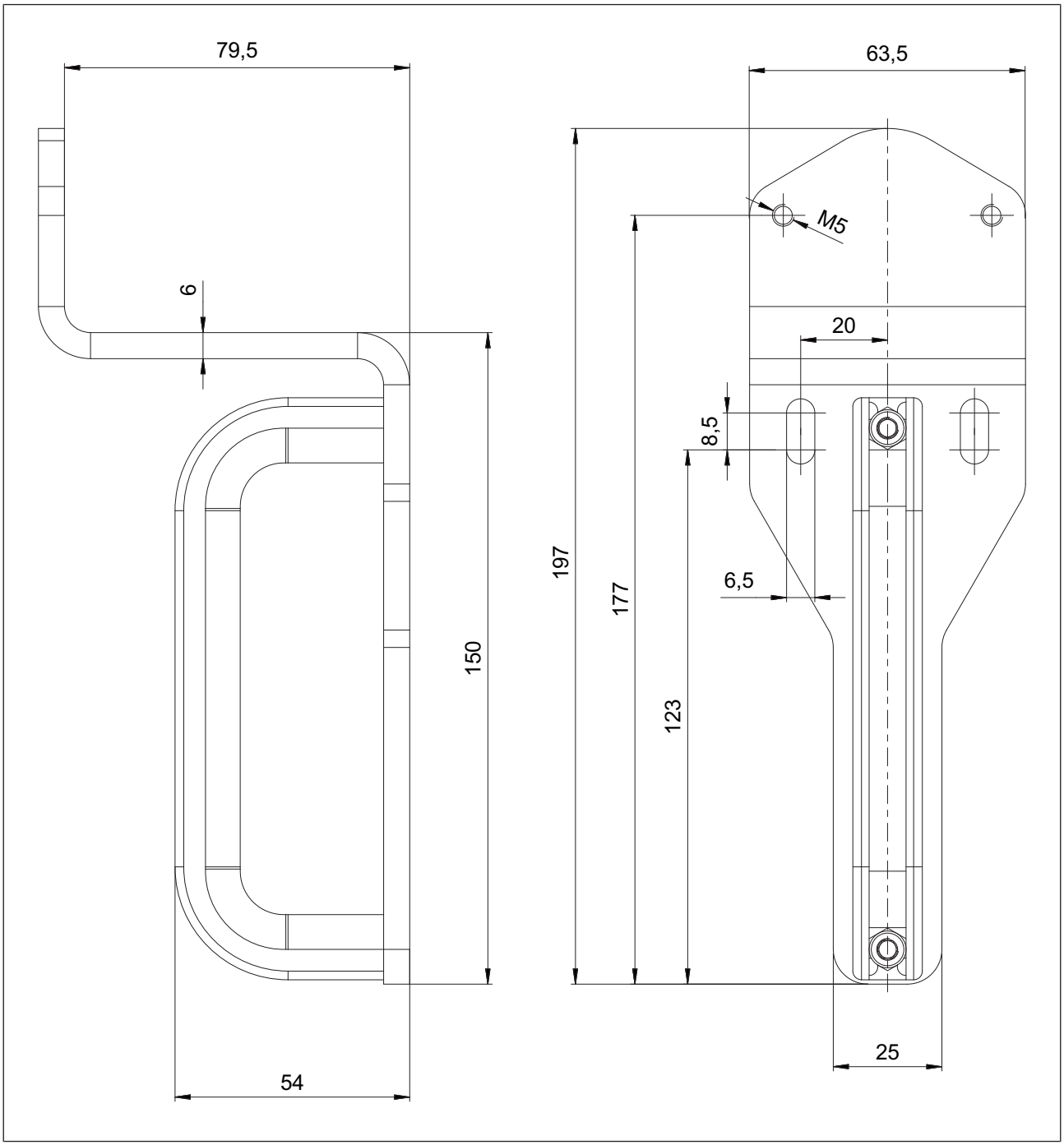

Fig.: Order no.: 570 497

13 Technical details

General	
Approvals	**CE, FCC, IC, TÜV, cULus Listed**
Sensor's mode of operation	**Transponder**
Coding level in accordance with EN ISO 14119	**Low**
Design in accordance with EN ISO 14119	**4**
Classification in accordance with EN 60947-5-3	**PDDB**
Pilz coding type	**Coded**
Transponder	
Frequency band	**122 kHz - 128 kHz**
Max. transmitter output	**15 mW**
Electrical data	
Supply voltage	
Voltage	**24 V**
Kind	**DC**
Voltage tolerance	**-20 %/+20 %**
Output of external power supply (DC)	**1 W**
Max. switching frequency	**1 Hz**
Magnet. supply voltage	**24 V**
Max. solenoid current t <150 ms	**1 A**
Max. cable capacitance at the safety outputs	
No-load, PNOZ with relay contacts	**40 nF**
PNOZmulti, PNOZelog, PSS	**70 nF**
Max. inrush current impulse	
Current pulse, A1	**5 A**
Pulse duration, A1	**0,0002 ms**
Max. unit fuse protection in accordance with UL	**3 A**
No-load current	**40 mA**
Inputs	
Number	**2**
Voltage at inputs	**24 V DC**
Current at solenoid input	**500 mA**
Semiconductor outputs	
OSSD safety outputs	**2**
Signal outputs	**1**
Switching current per output	**100 mA**
Breaking capacity per output	**2,4 W**
Residual current at "0" signal	**2 mA**
Potential isolation from system voltage	**No**
Short circuit-proof	**yes**
Residual current at outputs	**500 µA**
Voltage drop at OSSDs	**1 V**
Conditional rated short circuit current	**100 A**

Semiconductor outputs	
Lowest operating current	**1 mA**
Utilisation category in accordance with EN 60947-1	**DC-13**
Times	
Test pulse duration, safety outputs	**450 µs**
Switch-on delay	
after UB is applied	**1,1 s**
Actuator typ.	**30 ms**
Actuator max.	**50 ms**
Delay-on de-energisation	
Actuator typ.	**30 ms**
Actuator max.	**40 ms**
Risk time in accordance with EN 60947-5-3	**260 ms**
Supply interruption before de-energisation	**20 ms**
Simultaneity, channel 1 and 2 max.	**20 ms**
Pulse duration Lock/Unlock Request	**350 - 400 ms**
Processing time activate/deactivate guard locking	**100 ms**
Environmental data	
Temperature of metal surface at ambient temperature: 25 °C	**40 °C**
Ambient temperature	
In accordance with the standard	**EN 60068-2-14**
Temperature range	**0 - 60 °C**
Storage temperature	
In accordance with the standard	**EN 60068-2-1/-2**
Temperature range	**-25 - 70 °C**
Climatic suitability	
In accordance with the standard	**EN 60068-2-78**
Humidity	**93 % r. h. at 40 °C**
EMC	**EN 55011: class A, EN 60947-5-3, EN 61326-3-1**
Vibration	
In accordance with the standard	**EN 60068-2-6**
Frequency	**10 - 55 Hz**
Amplitude	**1 mm**
Shock stress	
In accordance with the standard	**EN 60068-2-27**
Number of shocks	**3**
Acceleration	**30g**
Duration	**11 ms**
Airgap creepage	
Overvoltage category	**III**
Pollution degree	**3**
Rated insulation voltage	**75 V**
Rated impulse withstand voltage	**0,8 kV**

Environmental data	
Protection type	
Housing	**IP67**
In accordance with UL	**type 1**
Mechanical data	
Length of cable with connector	**230 mm**
Min. bending radius (fixed permanently) K1	**5 x Ø**
Min. bending radius (moving) K1	**10 x Ø**
Cable diameter K1	**6,2 mm**
Escape release available	**No**
Mechanical life	**1,000,000 cycles**
Holding force FZh	
Fixing screws in parallel to actuator	**7.500 N**
Fixing screws side-on to actuator	**5.000 N**
Holding force F1Max in accordance with ISO 14119	
Fixing screws in parallel to actuator	**15.000 N**
Fixing screws side-on to actuator	**10.000 N**
Latching force	**30 N**
Max. vertical offset	**+/-3,0 mm**
Max. lateral offset	**+/-3,0 mm**
Max. angular offset around the X axis	**+/-2,0 deg**
Max. angular offset around the Y axis	**+/-2,5 deg**
Max. angular offset around the Z axis	**+/-7,5 deg**
Max. offset in closing direction	**+/-2 mm**
Max. retract speed of actuator	**0,3 m/s**
Actuator 1	**PSEN ml 1.1**
Min. distance between safety switches	**0 mm**
Connection type	**M12, 8-pin male connector**
Cable	**LiYY 8 x 0.25 mm2**
Material	**Aluminium, stainless steel, plastic, galvanised steel, Zn**
Max. torque setting for fixing screws	**6 - 6,5 Nm**
Max. torque setting escape release	**1,2 - 1,5 Nm**
Max. torque setting for mounting plate	**22 - 24 Nm**
Max. torque setting for mounting bracket	**14 - 16 Nm**
Min. gate radius	**300 mm**
Dimensions	
Height	**217,2 mm**
Width	**40 mm**
Depth	**40 mm**
Actuator dimensions	
Height	**63,5 mm**
Width	**40 mm**
Depth	**67,2 mm**
Weight of safety switch	**950 g**
Weight of actuator	**145 g**

Mechanical data	
Weight	**1.100 g**

Where standards are undated, the 2015-11 latest editions shall apply.

13.1 Classification according to ZVEI, CB24I

The following tables describe the classes and specific values of the product interface and the classes of interfaces compatible with it. The classification is described in the ZVEI position paper "Classification of Binary 24 V Interfaces - Functional Safety aspects covered by dynamic testing".

Solenoid inputs

Drain		Source	
Safety switch	C2	Safety control system	C2, C3

Drain parameters	Min.	Typ.	Max.
Test impulse duration	-	-	500 µs
Input resistance	16 Ohm	-	
Capacitive load	-	-	1,5 nF

Safe 1-pole HL outputs

Source			Drain	
Safety switch	C2		Evaluation device	C1, C2

Source parameters	Min.	Typ.	Max.
Test impulse duration	-	-	450 µs
Rated current	-	-	0,1 A
Capacitive load	-	-	70 nF

13.2 Safety characteristic data

NOTICE

You must comply with the safety characteristic data in order to achieve the required safety level for your plant/machine.

Operating mode	EN ISO 13849-1: 2015 PL	EN ISO 13849-1: 2015 Category	EN IEC 62061 SIL CL	EN IEC 62061 PFH_D [1/h]	Lambda d/ Lambda	EN ISO 13849-1 2015, EN IEC B10D	EN ISO 13849-1: 2015 T_M [year]
1-ch. guard locking	**PL d**	**Cat. 2**	**SIL CL 2**	**4,22E-09**	–	–	**20**
2-ch. guard locking	**PL e**	**Cat. 4**	**SIL CL 3**	**4,22E-09**	–	–	**20**
2-ch. OSSD	**PL e**	**Cat. 4**	**SIL CL 3**	**2,38E-09**	–	–	**20**

All the units used within a safety function must be considered when calculating the safety characteristic data.

INFORMATION

A safety function's SIL/PL values are **not** identical to the SIL/PL values of the units that are used and may be different. We recommend that you use the PAScal software tool to calculate the safety function's SIL/PL values.

NOTICE

Be sure that you observe the mechanical life. The safety characteristic data are only valid as long as the values of mechanical life are met.

14 Supplementary data

14.1 Radio approval

USA/Canada

FCC ID: VT8-PSENML
IC: 7482A-PSENML

FCC/IC-Requirements:
This product complies with Part 15 of the FCC Rules and with Industry Canada licence-exempt RSS standards.
Operation is subject to the following two conditions:
1) this product may not cause harmful interference, and
2) this product must accept any interference received, including interference that may cause undesired operation.

Changes or modifications made to this product not expressly approved by Pilz may void the FCC authorization to operate this equipment.

NOTE: This equipment has been tested and found to comply with the limits for a Class A digital device, pursuant to Part 15 of the FCC Rules. These limits are designed to provide reasonable protection against harmful interference when the equipment is operated in a commercial environment. This equipment generates, uses, and can radiate radio frequency energy and, if not installed and used in accordance with the instruction manual, may cause harmful interference to radio communications. Operation of this equipment in a residential area is likely to cause harmful interference in which case the user will be required to correct the interference at his own expense.

Le présent produit est conforme aux CNR d'Industrie Canada applicables aux appareils radio exempts de licence. L'exploitation est autorisée aux deux conditions suivantes:
(1) le produit ne doit pas produire de brouillage, et
(2) l'utilisateur de le produit doit accepter tout brouillage radioélectrique subi, même si le brouillage est susceptible d'en compromettre le fonctionnement.

14.2 Technical details for mounting bracket without handle unit

General	**570492**	**570493**	**570494**
Approvals	**CE**	**CE**	**CE**
Mechanical data	**570492**	**570493**	**570494**
Holding force FZh in accordance with ISO 14119	–	**3000 N**	**3000 N**
Holding force F1max in accordance with ISO 14119	–	**6000 N**	**6000 N**
Weight	**420 g**	**420 g**	**445 g**

14.3 Technical details for mounting bracket with handle unit

General	**570495**	**570496**	**570497**
Approvals	**CE**	**CE**	**CE**
Mechanical data	**570495**	**570496**	**570497**
Holding force FZh in accordance with ISO 14119	**3000 N**	**3000 N**	**3000 N**
Holding force F1max in accordance with ISO 14119	**6000 N**	**6000 N**	**6000 N**
Weight	**260 g**	**600 g**	**630 g**

15 Order reference

15.1 System

Product type	Features	Connection type	Order no.
PSEN ml b 1.1 unit	Mechanical safety gate system with guard locking, coded	M12, 8-pin male connector	570 400
PSEN ml b 1.1 switch	Mechanical safety switch with guard locking, coded	M12, 8-pin male connector	570 401
PSEN ml 1.1 actuator	Actuator, coded		570 480

15.2 Accessories

Installation accessories

Product type	Features	Order no.
PSEN ml escape release	Escape release stationary	570 460
PSEN ml escape release extension	Extension escape release stationary 25 mm	570 462
PSEN ml escape release cordset 1.5m	Escape release with push/pull cable 1.5 m	570 470
PSEN ml escape release cordset 2.0m	Escape release with push/pull cable 2 m	570 471
PSEN ml escape release cordset 2.5m	Escape release external with push/pull cable 2.5 m	570 472
PSEN ml escape release cordset 3.0m	Escape release with push/pull cable 3.0 m	570 473
PSEN ml escape release cordset 3.5m	Escape release with push/pull cable 3.5 m	570 474
PSEN ml escape release cordset 4.0m	Escape release with push/pull cable 4 m	570 475
PSEN ml mounting plate	Mounting plate for installing the safety switch, with 4 hexagonal socket head screws and 1 tamper-proof pan head locking screw, M5x40	570 490
PSEN ml bracket sliding door	Mounting bracket for installing the actuator on a sliding gate, with 2 hexagonal socket head screws and 1 tamper-proof pan head locking screw, M5x16	570 492
PSEN ml bracket swinging door 70	Mounting bracket for installing the actuator on a swing gate, with 2 hexagonal socket head screws and 1 tamper-proof pan head locking screw, M5x12. Height: 70 mm.	570 493
PSEN ml bracket swinging door 80	Mounting bracket for installing the actuator on a swing gate, with 2 hexagonal socket head screws and 1 tamper-proof pan head locking screw, M5x12. Height: 80 mm.	570 494

Product type	Features	Order no.
PSEN ml door handle sliding door	Mounting bracket with handle unit for installing the actuator on a sliding gate, with 2 hexagonal socket head screws and 1 tamper-proof pan head locking screw, M5x16.	570 495
PSEN ml door handle swinging door 70	Mounting bracket with handle unit for installing the actuator on a swing gate, with 2 hexagonal socket head screws and 1 tamper-proof pan head locking screw, M5x12. Height: 70 mm.	570 496
PSEN ml door handle swinging door 80	Mounting bracket with handle unit for installing the actuator on a swing gate, with 2 hexagonal socket head screws and 1 tamper-proof pan head locking screw, M5x12. Height: 80 mm.	570 497
PSEN screw set bracket swinging door	Screw sets for attaching the mounting bracket to a swing gate	570 498
PSEN screw set bracket sliding door	Screw sets for attaching the mounting bracket to a sliding gate	570 499

Cable

Product type	Features	Connector X1	Connector X2	Connector X3	Order no.
PSEN cable axial M12 8-pole 3m	3 m	M12, 8-pin female connector, straight			540 319
PSEN cable axial M12 8-pole 5m	5 m	M12, 8-pin female connector, straight			540 320
PSEN cable axial M12 8-pole 10m	10 m	M12, 8-pin female connector, straight			540 321
PSEN cable M12-8sf, 20m	20 m	M12, 8-pin female connector, straight			540 333
PSEN cable axial M12 8-pole 30m	30 m	M12, 8-pin female connector, straight			540 326
PSEN cable M12-8sf M12-8sm, 0.5m	0.5 m	M12, 8-pin female connector, straight	M12, 8-pin male connector, straight		540 345
PSEN cable M12-8sf M12-8sm, 1m	1 m	M12, 8-pin female connector, straight	M12, 8-pin male connector, straight		540 346
PSEN cable M12-8sf M12-8sm, 1.5m	1.5 m	M12, 8-pin female connector, straight	M12, 8-pin male connector, straight		540 347
PSEN cable M12-8sf M12-8sm, 2m	2 m	M12, 8-pin female connector, straight	M12, 8-pin male connector, straight		540 340
PSEN cable M12-8sf M12-8sm, 5m	5 m	M12, 8-pin female connector, straight	M12, 8-pin male connector, straight		540 341

Product type	Features	Connector X1	Connector X2	Connector X3	Order no.
PSEN cable M12-8sf M12-8sm, 10m	10 m	M12, 8-pin female connector, straight	M12, 8-pin male connector, straight		540 342
PSEN cable M12-8sf M12-8sm, 20m	20 m	M12, 8-pin female connector, straight	M12, 8-pin male connector, straight		540 343
PSEN cable M12-8sf M12-8sm, 30m	30 m	M12, 8-pin female connector, straight	M12, 8-pin male connector, straight		540 344
PSEN ml / PSENcs Y junction M12		M12, 8-pin female connector	M12, 8-pin male connector	M12, 8-pin female connector	570 489

16 Appendix

The following check list is intended as a guide to provide support during commissioning, re-commissioning and the prescribed regular testing of the PSEN ml b 1.1.

Note that the check list is not intended to replace the plant-specific safety analysis required for commissioning/recommissioning, nor the resulting inspections and actions.

INFORMATION

Commissioning, recommissioning and regular inspection may only be carried out by qualified personnel.

We recommend that you keep the completed check list and store it with the machine documentation for reference.

Date	Action	Safety switch Number	Actuator Number	OK	Not OK	Notes	Signature

17 EC declaration of conformity

This product/these products meet the requirements of the directive 2006/42/EC for machinery of the European Parliament and of the Council. The complete EC Declaration of Conformity is available on the Internet at www.pilz.com/downloads.
Authorised representative: Norbert Fröhlich, Pilz GmbH & Co. KG, Felix-Wankel-Str. 2, 73760 Ostfildern, Germany

Support

Technical support is available from Pilz round the clock.

Americas
Brazil
+55 11 97569-2804
Canada
+1 888-315-PILZ (315-7459)
Mexico
+52 55 5572 1300
USA (toll-free)
+1 877-PILZUSA (745-9872)

Asia
China
+86 21 60880878-216
Japan
+81 45 471-2281
South Korea
+82 31 450 0680

Australia
+61 3 95600621

Europe
Austria
+43 1 7986263-0
Belgium, Luxembourg
+32 9 3217575
France
+33 3 88104000
Germany
+49 711 3409-444
Ireland
+353 21 4804983
Italy, Malta
+39 0362 1826711

Scandinavia
+45 74436332
Spain
+34 938497433
Switzerland
+41 62 88979-30
The Netherlands
+31 347 320477
Turkey
+90 216 5775552
United Kingdom
+44 1536 462203

You can reach our international hotline on:
+49 711 3409-444
support@pilz.com

Pilz develops environmentally-friendly products using ecological materials and energy-saving technologies. Offices and production facilities are ecologically designed, environmentally-aware and energy-saving. So Pilz offers sustainability, plus the security of using energy-efficient products and environmentally-friendly solutions.

Energy saving by Pilz

BLUECOMPETENCE Alliance Member
Partner of the Engineering Industry Sustainability Initiative

pilz
Partner of:
The Best of German Engineering

Pilz GmbH & Co. KG
Felix-Wankel-Straße 2
73760 Ostfildern, Germany
Tel.: +49 711 3409-0
Fax: +49 711 3409-133
info@pilz.com
www.pilz.com

PILZ
THE SPIRIT OF SAFETY

1003884-EN-08, 2018-04 Printed in Germany
© Pilz GmbH & Co. KG, 2015

CMSE®, InduraNET p®, PAS4000®, PAScal®, PASconfig®, Plz®, PIT®, PLID®, PMCprimo®, PMCprotego®, PMCtendo®, PMD®, PMI®, PNOZ®, Primo®, PSEN®, PSS®, PVIS®, SafetyBUS SafetyEYE®, SafetyNET p®, THE SPIRIT OF SAFETY® are registered and protected trademarks of Pilz GmbH & Co. KG in some countries. We would point out that product features m from the details stated in this document, depending on the status at the time of publication and the scope of the equipment. We accept no responsibility for the validity, accuracy and entirety of the text and graphics presented in this information. Please contact our Technical Support if you have any questions.