Manual
of
Electronic Article Surveillance
(Model: PDS8834)

SHENZHEN PROMATIC SECURITY SYSTEMS CO.,LTD

MARCH 2016

Copyright Statement

This manual cannot be used as a legal document. Any damage or loss caused by misunderstanding the content will not be undertook. In order to prevent any tort, Promatic now makes this solemn statement: The copyrights of this manual belongs to Shenzhen Promatic Security Systems Co. Ltd.. Any individual or company cannot extract, copy or transfer this manual without a written permission.

Promatic reserves the right to modify this manual. The information contained in this document is subjected to modify without notice.

All rights reserved by Promatic, all copy will be prosecuted!

Promatic and 普诺玛 and Promatic all are the registered trademark of SHENZHEN PROMATIC SECURITY SYSTEMS CO.,LTD in the People's Republic of China.

CONTENTS

Chapter1. Introduction 4
1.1. Aim 4
1.2. Overview 4
Chapter2. Installation and Cautions 5
2.1. Precautions before installing: 5
2.2. Suitable width 5
2.3. Test method of the antennas 6
2.4. Type of Entrances 7
2.5. Installation of antennas 8
Chapter3 Cable Connection 14
3.1. Picture of PCB board and cable connection 14
1) 6230 14
2) 6230S 15
3) 6230M 16
3.2. Power cable connection 17
3.3. Signal cable connection 18
1) Diagram for 6230 18
2) Diagram for 6230S 19
3) Match signal cable connection 20
4) Alarm light cable connection 21
Chapter4. Testing the antennas 22
4.1 Loops connection 22
4.2 Working mode 22
4.3 Connection port for TX-RX and RX-TX-RX mode 22
4.4 Programmable Relay 22
4.5 Auto Gain Control (AGC)/Manual 23
4.6 Debugging software 24
Chapter5. Upgrade 29
Chapter6. Contact us 30

Chapter1. Introduction

Thank you for purchasing Promatic product.

Please read this manual carefully before using the product.

1.1. Aim

The aim of this manual is to help you to use the product properly.

1.2. Overview

This manual is suitable while you are using these model types as below：

PDS8835S/8835/8835RX

PDS8834S/8834/8834RX

PDS8858S/8858/8858RX

PDS3620S/3620/3620RX

The products with “S” are enhanced model. It gets one more transmission circuit. It provides better performance, wider detection range and better anti-interference ability.

Chapter2. Installation and Cautions

2.1. Precautions before installing:

The notes below should be considered:

- The power supply must be independent. It must be provided exactly from the main switch box without adhering to other power or device.
- The power supply needs to be grounded.
- No metallic item within 30cm, such as shelves, door frames or metal plates.
- No electronic devices or cables near the antennas.
- Make sure the ground is flat and the antennas can be installed steadily on it.
- It is better test before installation in case of any adjustment needed.

2.2. Suitable width

Please see below:

Detection Range

Unit : cm

No.		Antennas											
		PDS 8835S	PDS 8834S	PDS 8858S	PDS 3620S	PDS 8835	PDS 8834	PDS 8858	PDS 3620	PDS 8835RX	PDS 8834RX	PDS 8858RX	PDS 3620RX
1	PCB BOARD	6230S				6230				6230m			
2	Dual mode / Soft lable (TX+RX)	130	130	140	140	110	110	120	120	WORK WITH PDS8835S / 8835	WORK WITH PDS8834S / 8834	WORK WITH PDS8858S / 8858	WORK WITH PDS3620S / 3620
3	Dual mode /Hard tag (TX+RX)	160	160	180	180	150	150	160	160				
4	Mono mode / Soft lable/ Each side	80	80	90	x	75	75	80	x	No RX needs in Mono mode			
5	Mono mode / Hard tag / Each side	110	110	120	x	100	100	120	x				

* The detection range above is for Dual mode, and just duoble the width when using Double Dual mode.
For example, Dual mode/ Soft label (TX+RX) is 130cm, then Double dual mode / Soft lable (RX+TX+RX) is : 130 x 2 = 260cm

The width provided is for your reference. You can adjust according to different installation site.

2.3. Test method of the antennas

The antenna needs to be tested before being installed. Sometimes the actual performance cannot reach the same level as designed because of different environment. In order to decide the width, it is necessary test the antenna before installation.

1) Test with antennas in dual mode(one master-one slave) or double dual mode(one master-two slaves)

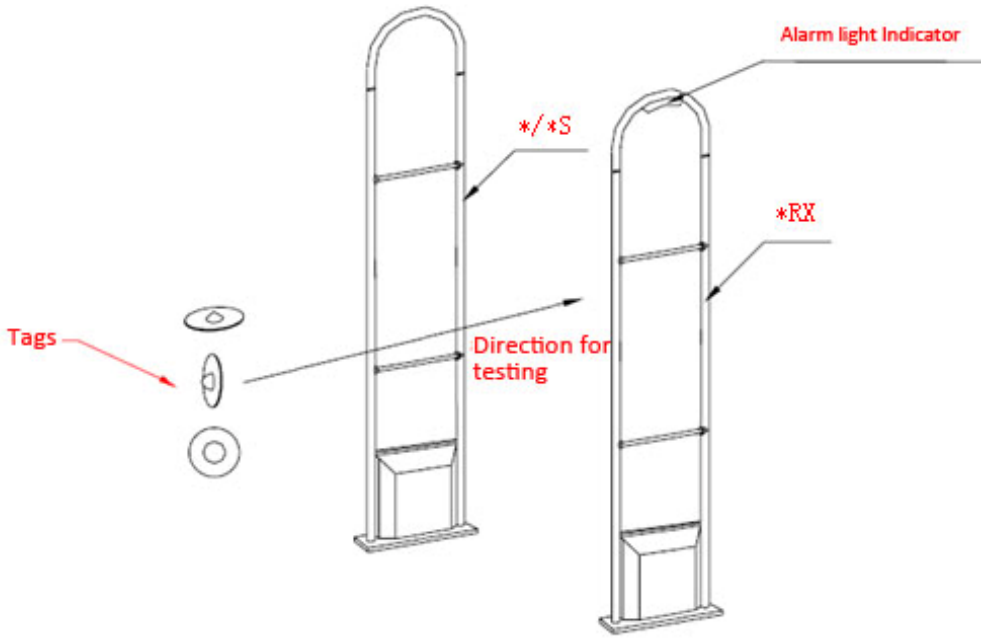

*The antennas showed are only for reference. Please adhere to the actual product instead.

2) Test with antenna in MONO mode(Transmitter and receiver all-in one)

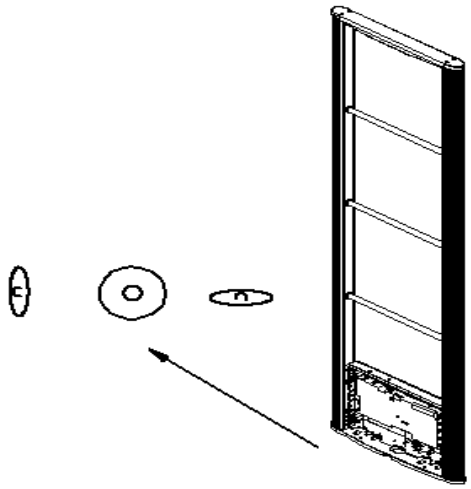

2.4. Type of Entrances

1) General entrance

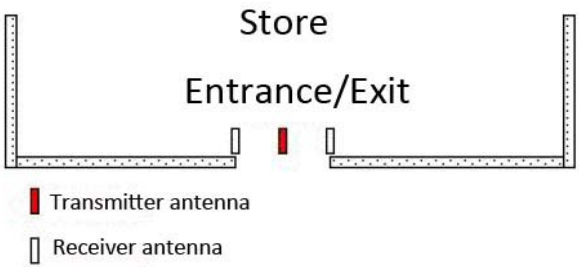

2) Aisles

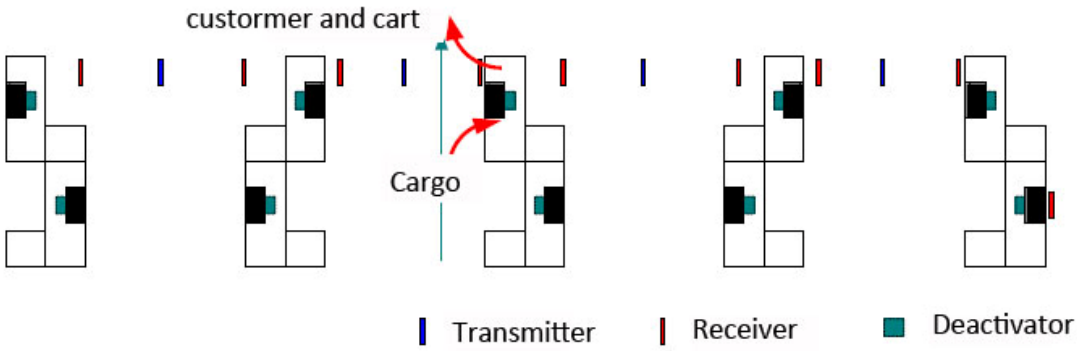

3) Cargo and people separate

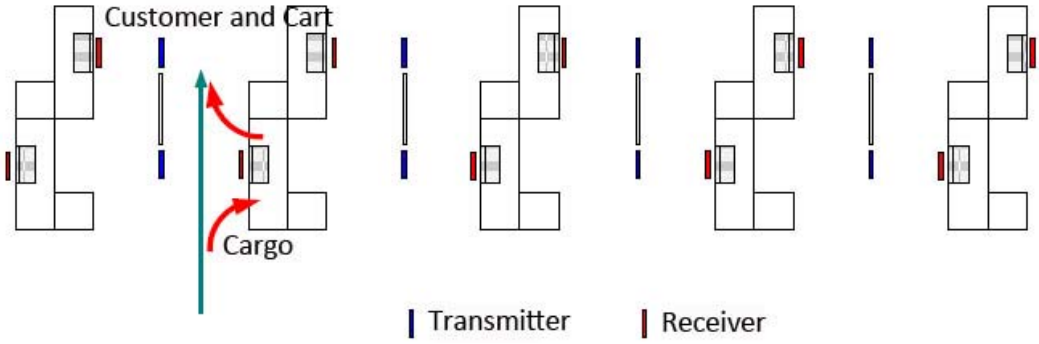

2.5. Installation of antennas

The installation of different antennas is similar. PDS8858S is taken for sample, and be referenced when installing other models.

1) Stable the antenna

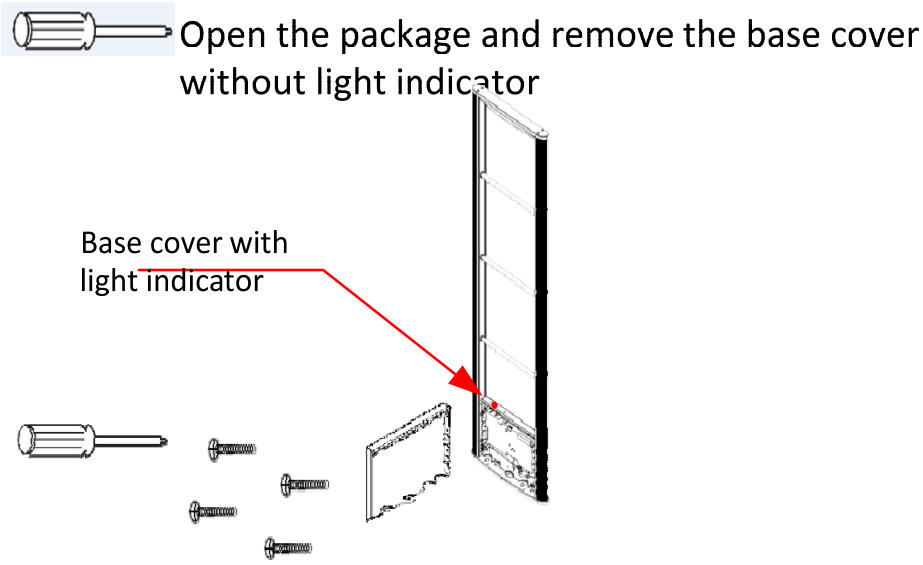

Place the antenna to the installing site and make marks

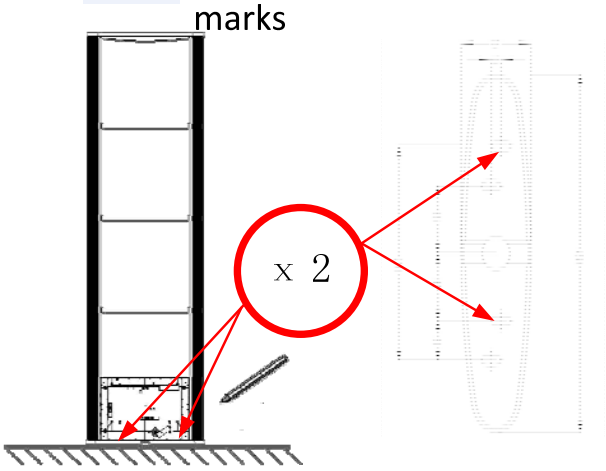

Drill the mounting hole with the marks

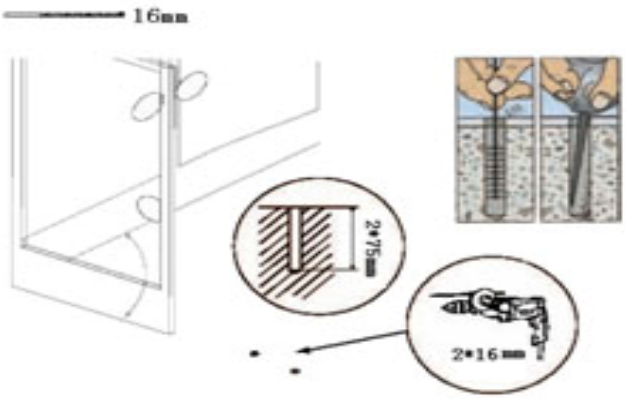

Attentions;
1.Use a drill with 16mm/ 12mm screw (depends)
2.The depth of the mountinghole is about 75mm.
3.The mounting hole must be verical.
4.Clean the dust of the mounting hole.

Use a hammer to smash the screws

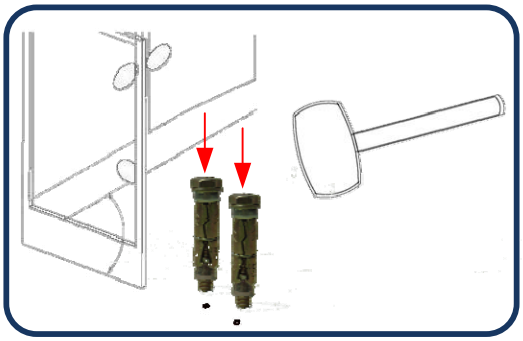

Tighten the screws

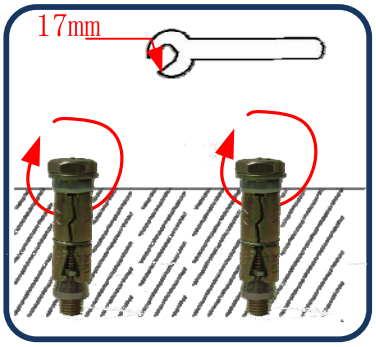

Remove the screw and fix the antenna

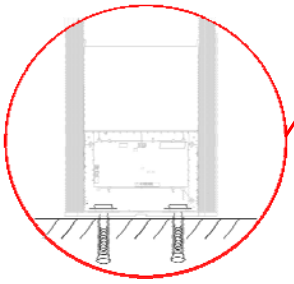

Attention:

If instability caused by the ground structure, glues might need for stabling the antenna.

2) Preparation of the cables in the ground

Groove the ground and cover with a stainless steel lid

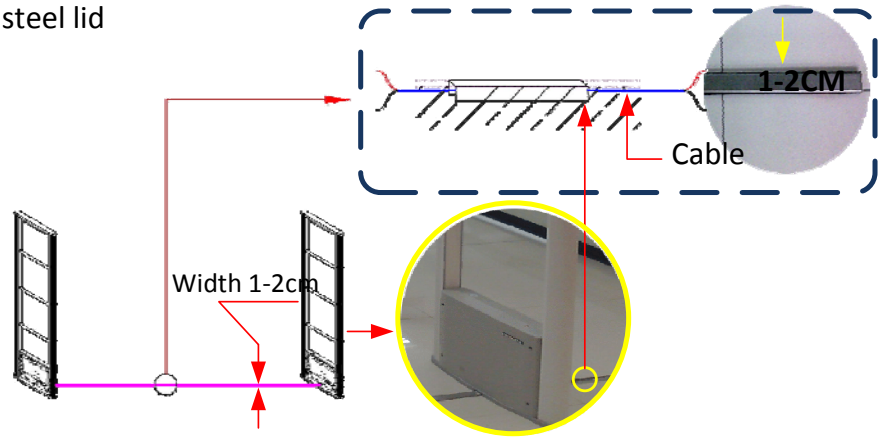

Draw the marking lines for grooving

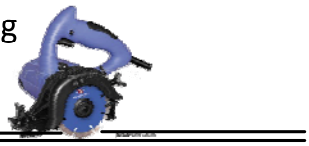

Groove along with the marking line
And clean the dust caused by it.

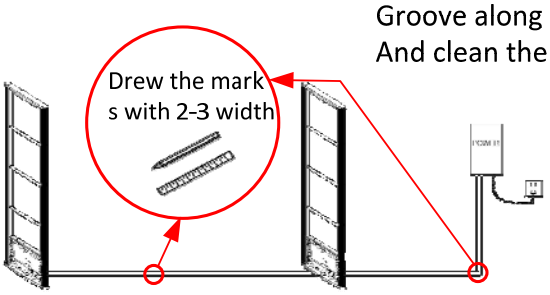

Put in the stainles
Steel lid.

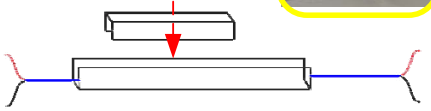

3) Cable Preparation

Cable preparation for Dual mode

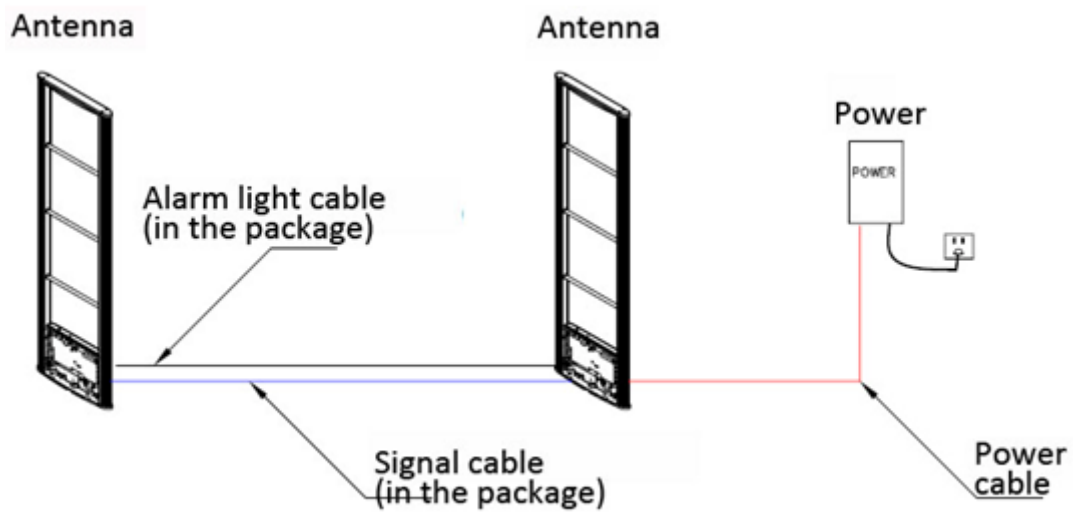

Cable preparation for Double Dual mode

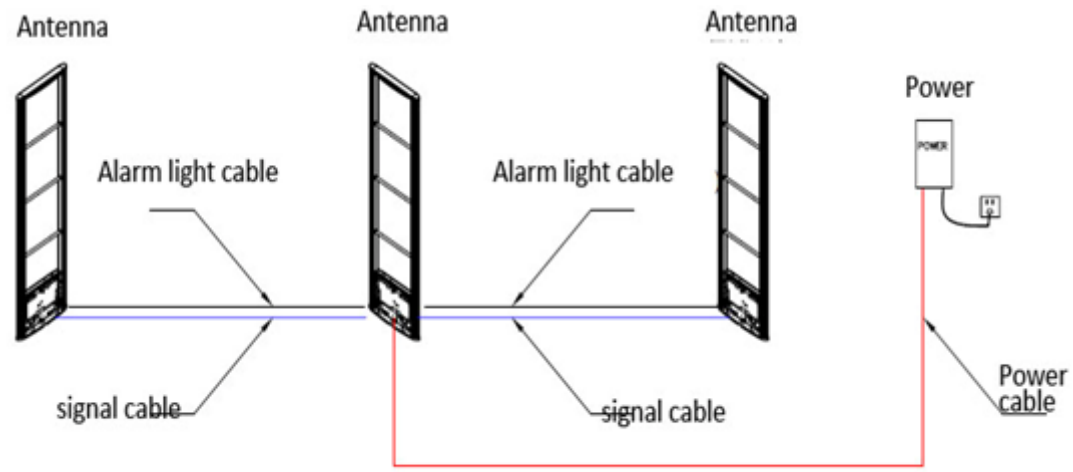

Cable preparation for Mono mode

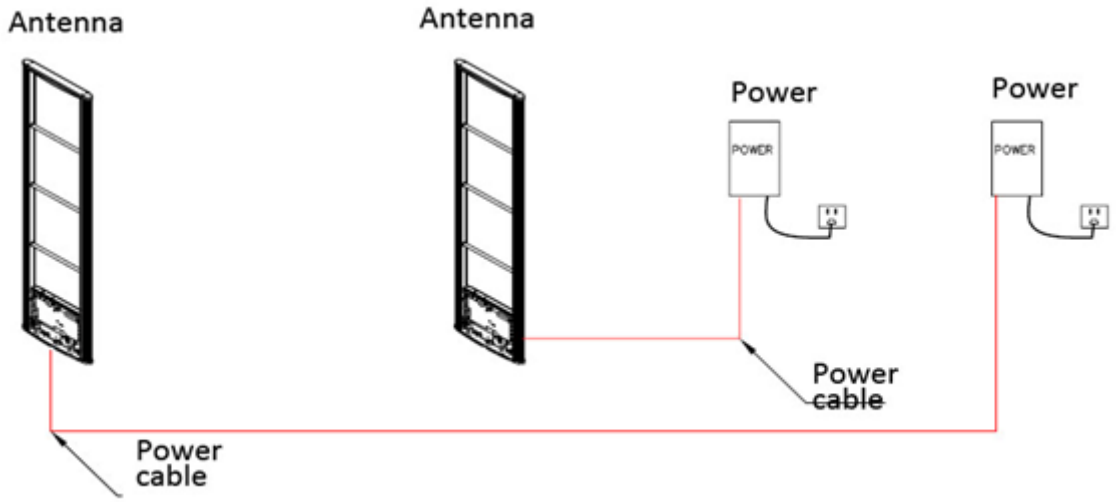

Notes: The light cable and match cable are included in the package. The length is 2.4M. They can be rolled up when too long. DO NOT CUT OR SOLDER SHORT.

Chapter3 Cable Connection

3.1. Picture of PCB board and cable connection

1) 6230

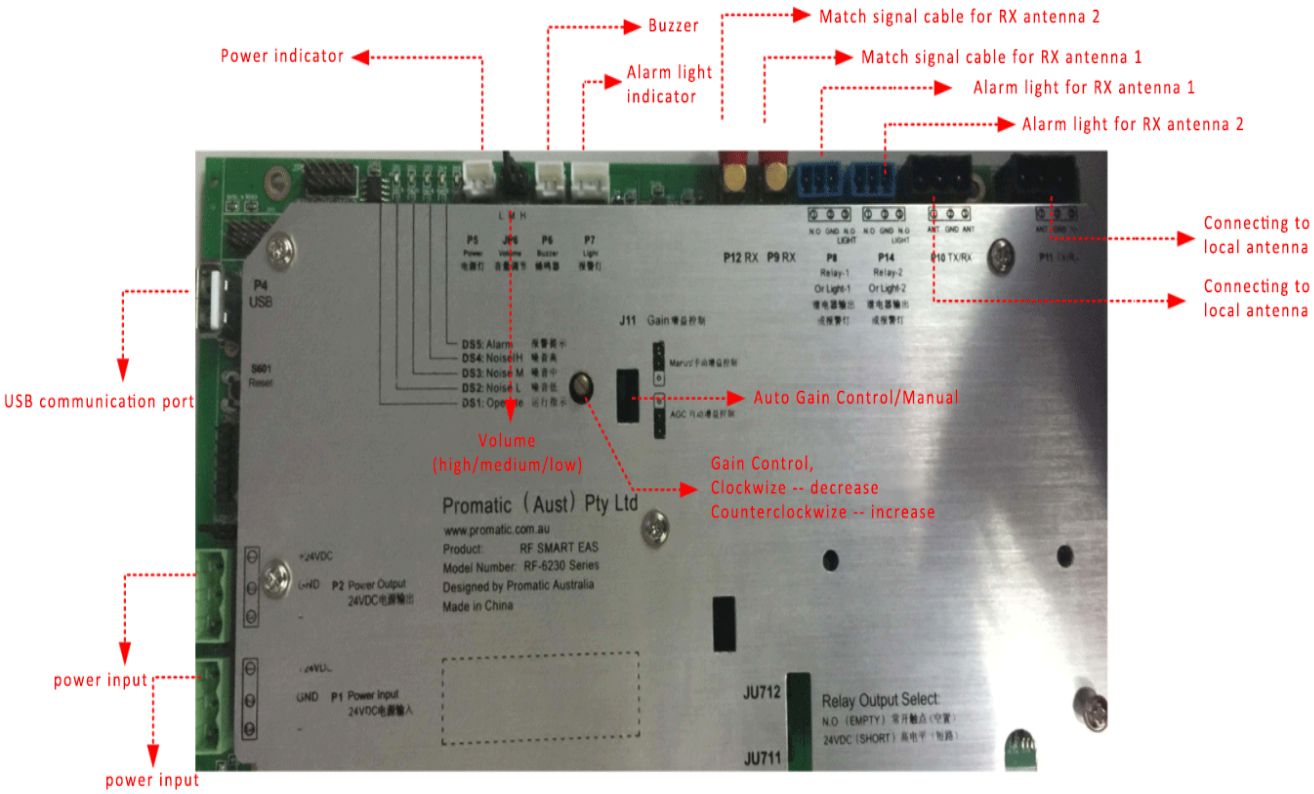

P1	24V power input	P2	24V power output	P4	USB communication port
P5	Power indicator	P6	Buzzer	P7	Alarm light indicator
P8	Alarm light for RX antenna 1	P9	Match signal cable for RX antenna 1		
P10	Connecting to local antenna (Figure 8)	P11	Connecting to local antenna (Figure dual 8)		
P12	Match signal cable for RX antenna 2	P14	Alarm light for RX antenna 2		
JP6	Volume (high/medium/low)	J11	Auto Gain Control/Manual		

Note: "*RX"means slave antennas for Dual/ Double Dual mode, which are the antennas with 6230M match board.

When set as Double Dual mode, *RX（1） means antenna No. 1 and *RX（2） means antenna No.2.

The light cable and match signal cable for RX1 must be connected to the ports for RX1. Cables RX2 need to connect to ports RX2. DO NOT MISMATCH. Or it will be RX1 alarms and RX2 light flashes.

2) 6230S

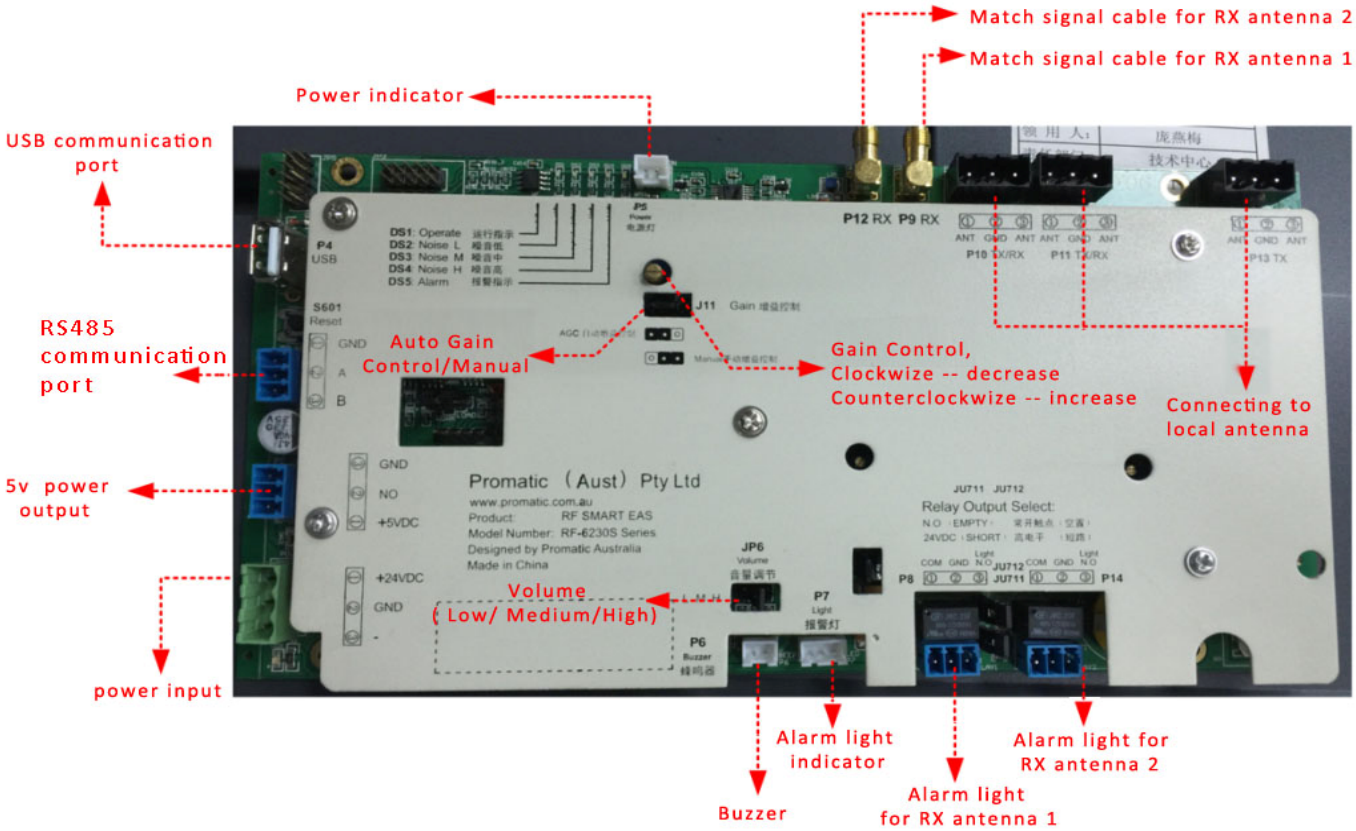

P1	24V power input	P2	5v power output
P3	RS485 communication port	P4	USB communication port
P5	Power indicator	P6	Buzzer
P7	Alarm light indicator	P8	Alarm light for RX antenna 1
P9	Match signal cable for RX antenna 1	P10	Connecting to local antenna (Figure 8)
P11	Connecting to local antenna (Figure dual 8)	P12	Match signal cable for RX antenna 2
P13	Connecting to local antenna **(Figure O)**	P14	Alarm light for RX antenna 2
JP6	Skipping Stitch for Volume(Low/ Medium/High)	J11	Auto Gain Control/Manual

*The ports connecting to local antenna are fixed and cannot be changed. Do not mismatch them or change them randomly.

*Other unmarked ports in the board are used for manufacturing. Do not tune or adjust.

Note：

"*RX"means slave antennas for Dual/ Double Dual mode, which are the antennas with 6230M match board. When set as Double Dual mode, *RX（1） means the antenna No. 1 and *RX（2） means the antenna No.2.

The light cable and match signal cable for RX1 must be connected to the ports for RX1. Cables RX2 need to connect to ports RX2. DO NOT MISMATCH. Or it will be RX1 alarms and RX2 light flashes.

3) 6230M

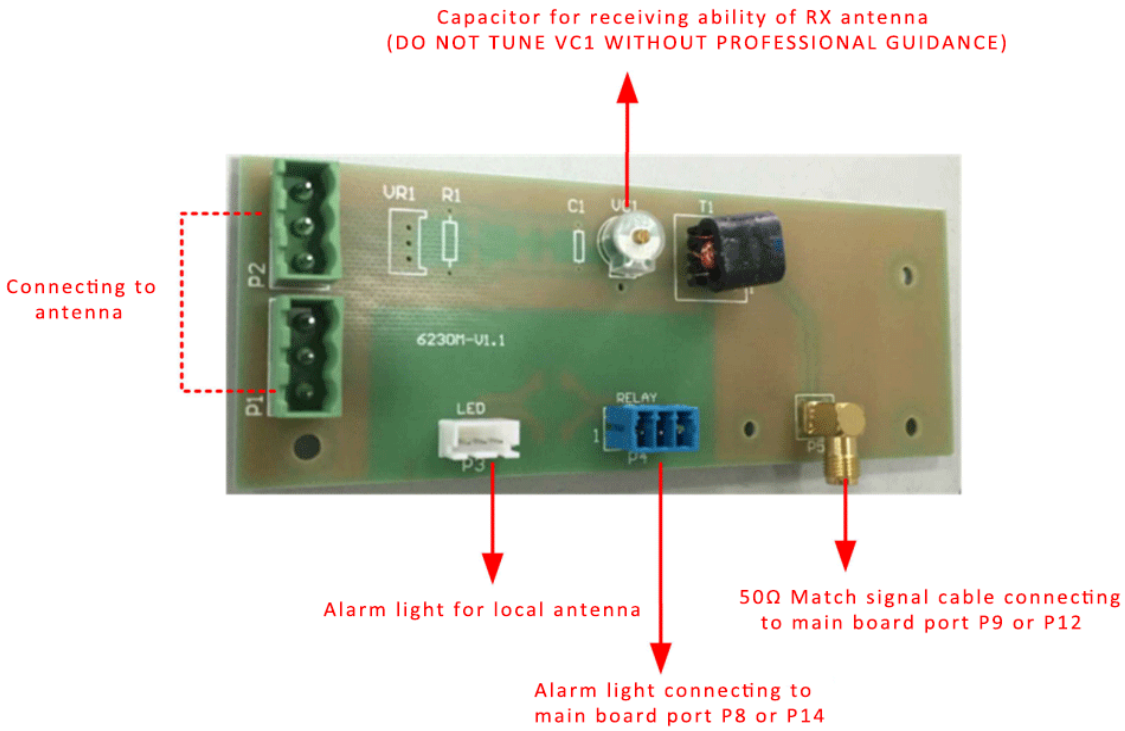

P1	Connecting to local antenna	P2	Connecting to local antenna
P3	Alarm light for local antenna		
P4	Alarm light connecting to main board port P8 or P14		
P5	50Ω Match signal cable connecting to main board port P9 or P12		
VC1	Capacitor for receiving ability of RX antenna (DO NOT TUNE VC1 WITHOUT PROFESSIONAL GUIDANCE)		

3.2. Power cable connection

Take down the power cable connector and connect the power line as showed below.

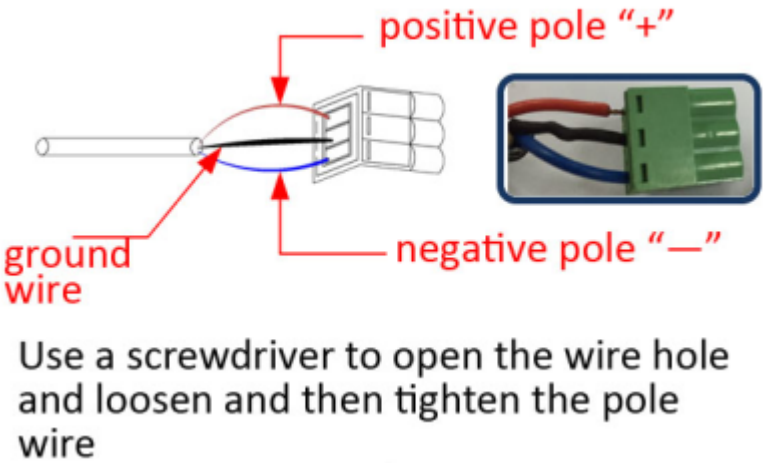

- MAKE SURE THE POWER LINES ARE CONNECTED CORRECTLY. Red for "+" and blue for "-" and black for "ground". Incorrect cable connection will burn out the board.

3.3. Signal cable connection

1) Diagram for 6230

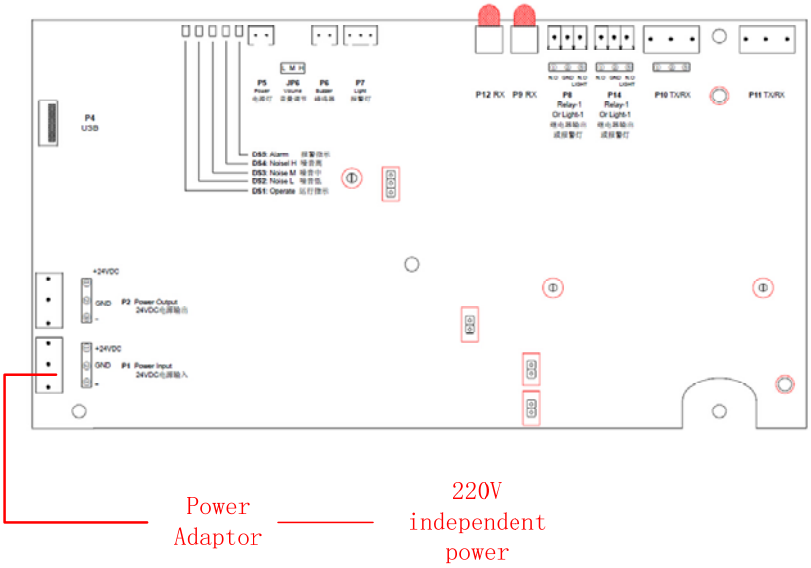

MONO Mode

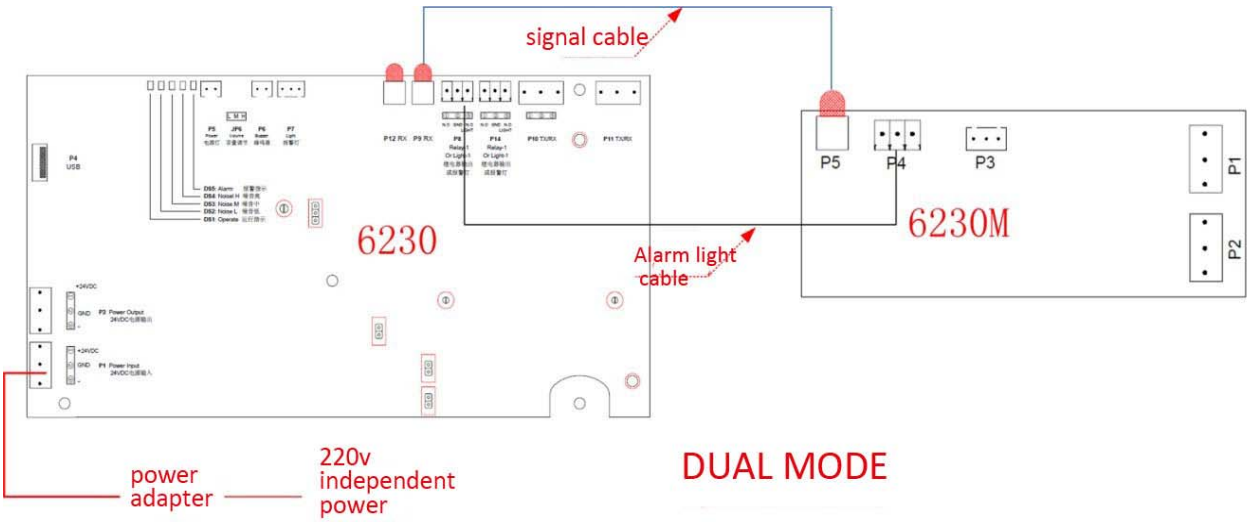

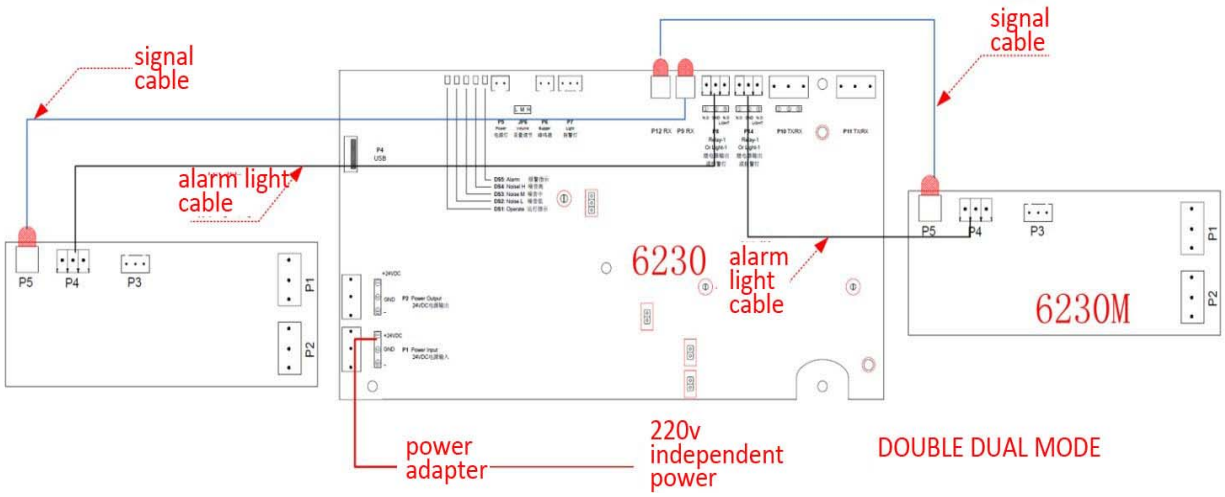

2） Diagram for 6230S

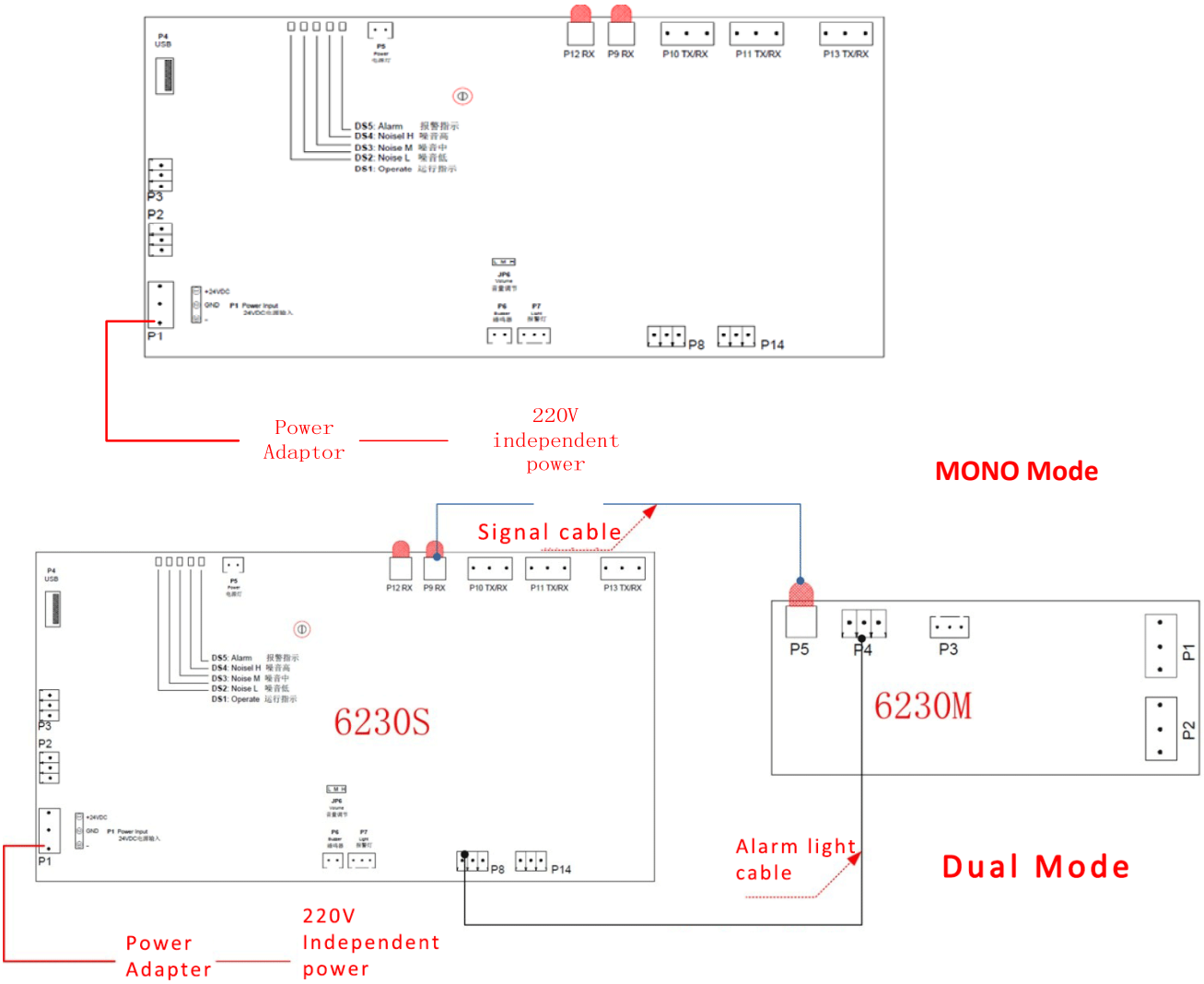

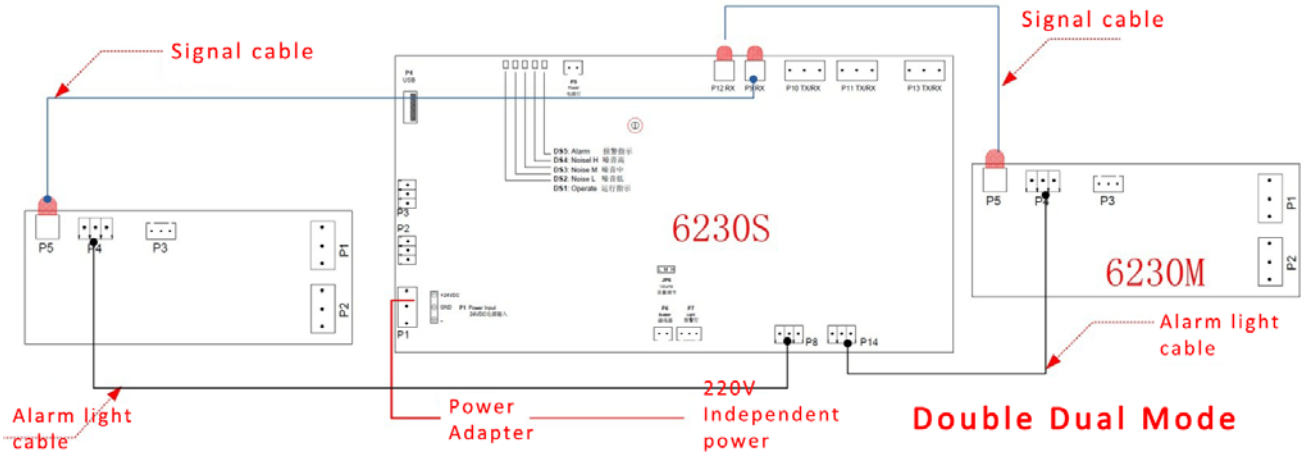

3) Match signal cable connection

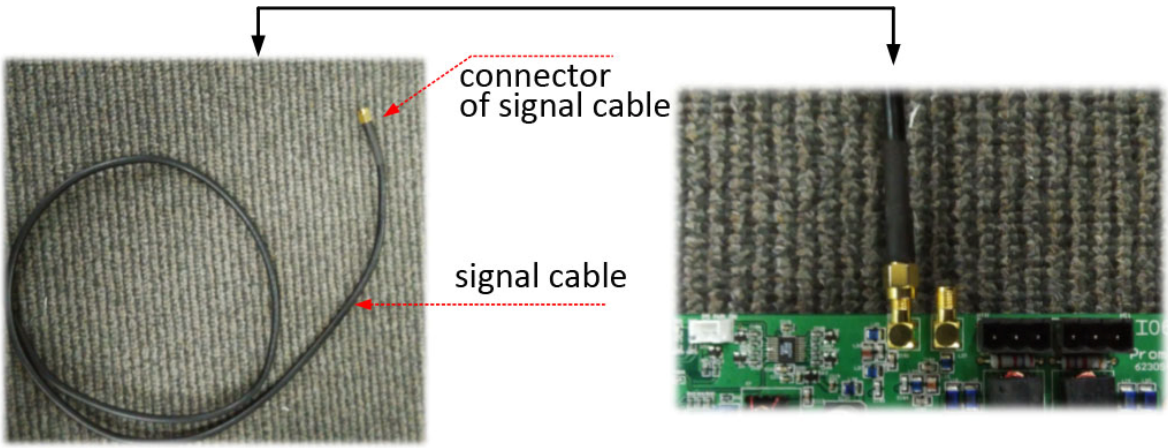

Rotate the connector of signal cable and make sure it is tightened.

4) Alarm light cable connection

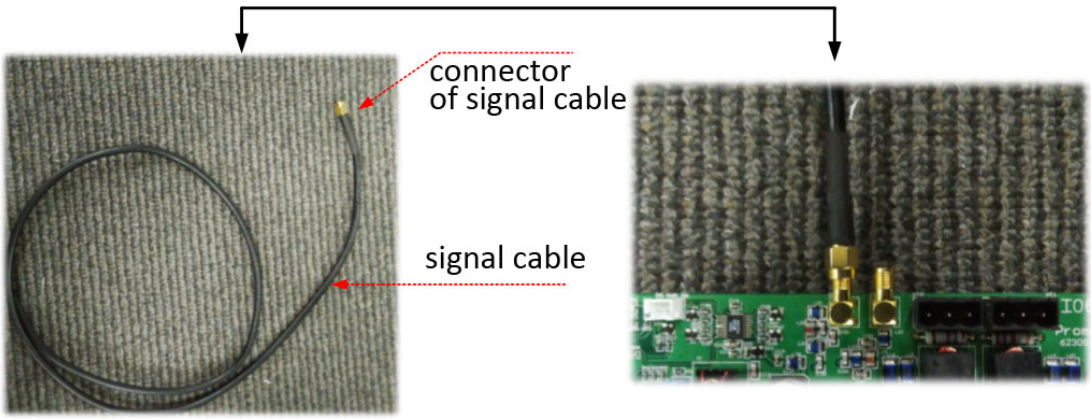

Rotate the connector of signal cable and make sure it is tightened.

- The signal cable transfers the alarm signal to slave antenna. t is direct current and has positive (+) pole and negative (-) pole. Make sure the power line is connected correctly as show above. Incorrect cable connection will burn out the board.
- Picture above is the method for connecting 1 slave antenna (Dual mode). For connecting 2 slave antennas, 2 more ports connection (P12& P14) in the same way.

Chapter4. Testing the antennas

4.1 Loops connection

Product: PDS3620STX, PDS8858/S, PDS8834/S.
These models have 3 loops inside the antenna, including Figure 8, figure double 8 and figure O. Figure 8 Loop, red cable with mark 3,4 should be connected to port P10. Figure double 8 Loop, black cable with mark 5,6, should be connected to the port P11. Figure O Loop, blue cable with mark 1,2, should be connected to port P13. The cable has been connected to the corresponding ports before delivery.
For products without S, the unused loop must be short circuited and grounded with the socket on the board.

4.2 Working mode

Promatic 3rd RF EAS Main board 6230/6230S has three working mode, including:
Mono: transmit-receive all-in-one
TX-RX: 1 master antenna and 1 slave antenna
RX-TX-RX: 1 master antenna and 2 slave antennas

4.3 Connection port for TX-RX and RX-TX-RX mode

When TX-RX mode, the first port for 50Ω receiving signal should be P9, while alarm light be P8.
When RX-TX-RX mode, the second port for 50Ω receiving signal should be P12, while alarm light be P14.

4.4 Programmable Relay

There are two programmable relay in PCB boards. Short circuit JU711 or JU712 can make signal to be Normally Open (N.O.) or 24VDC signal output.

Short Circuit Switch	JU711		JU712	
Status	Spare	Short-circuited	Spare	Short-circuited
Output port	P8		P14	

Mode of output port	N.O (normally open)	24VDC	N.O (normally open)	24VDC

Note：
When connecting slave antennas, the working mode of PCB board (TX-RX or RX-TX-RX) is fixed and cannot be changed.

4.5 Auto Gain Control (AGC)/Manual

Use the skipping stitch **J11** to change the main board to be Auto Gain Control (AGC) or Manual mode. It is recommended to remain it as default setting: AGC when you use.

Notes：
When then gain is fixed and put the skipping stitch J11 to to be Manual, you can change the sensitivity by turning the potentiometer on the board.

Counterclockwise rotate—increase the gain and sensitivity
Clockwise rotate—decrease the gain and sensitivity

Note: The change of gain will affect the sensitivity, but sensitivity adjustment depends more on the configuration software.

I.E.

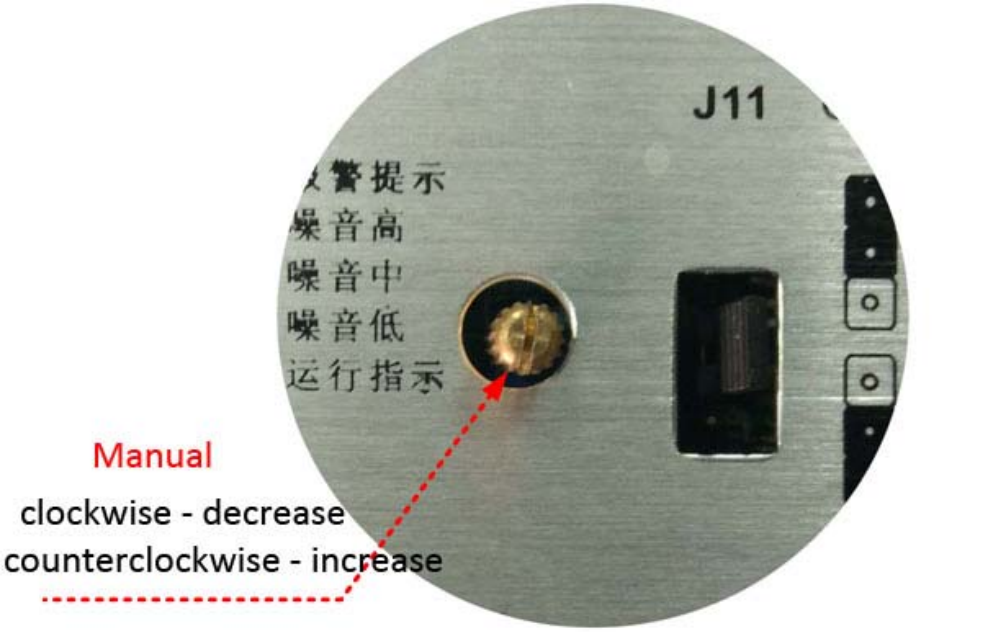

The sensitivity is the best before any tuning.
Do not tune the sensitivity without professional guidance. Do not clockwise rotate the switch to the upmost, or it may cause false alarm.

4.6 Configuration software

1) Downloading and registration of the software

Statement：

Promatic EAS Debugging Tools can only be downloaded and used by authorized users of Promatic.

Promatic EAS Debugging Tools can be used to adjusting the parameters of the PCB board. The most common adjustment is Sensitivity and RX-Delay

2) Preparation for configuration

- USB communication cable（double plat cephalous）
- Computer（better with Windows XP）
- Driver for port
- 3G network card or WI-FI when necessary
- QQ for remote service

Connect a USB cable from computer to PCB board. Please install the Driver of the port if you get a hint from your computer.

Open the software: Promatic EAS Debugging Tools

Click

and the software will find the device automatically within 2 minutes. Please check the Driver if it fail.

3) Address of the device

[New]-[Set]: change the address of the device

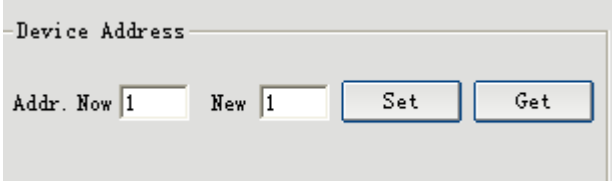

4) Lighting status

[Get]: the software can connect to the PCB board and the working status of the board.

5) Working Mode

Users can change the working mode of the detectors, i.e. TX-RX Dual (one master one slave) to RX-TX-RX (one master two slave), etc.

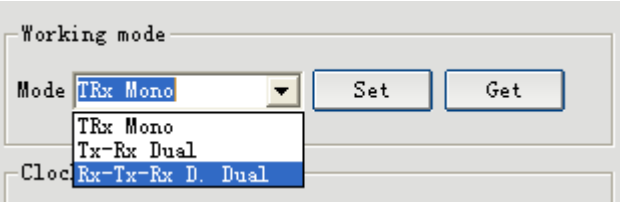

6) Clock setting

Get and Set the clock: Correct clock setting makes sure the time on and off control of the detectors be correct. The clock is get from computer.

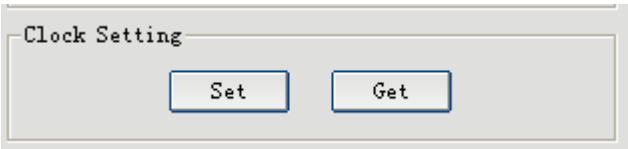

7) Time setting

By setting the working time of the detectors, it can not only save energy but also can lengthen the service time of them.

Check [Enable] - set the time – [Set].

Un-check [Enable]-[Set] to disable the time setting.

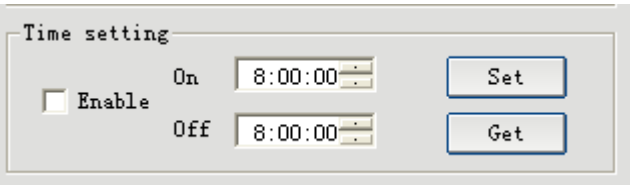

8) Sensitivity setting

Promatic 3rd RF EAS Smart main board 6230/6230S adapting new software radio technique, phased-array technique and unique tag-recognition skill, enables the devices to be strong self-adapt. Users can use the debugging software to change the sensitivity.

1: strongest 10: weakest Default setting: 2

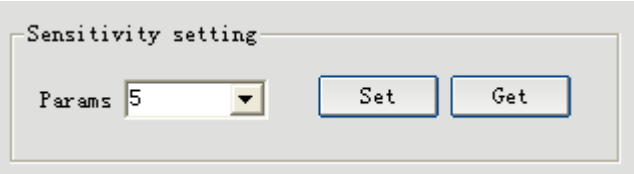

9) RX-Delay

When there is much metallic reflection of the surroundings, the interference can be reduced effectively by increasing the time of 'RX-Delay'.

The default setting is 3 us.

Do not increase the time of RX-Delay without limits, or else it will affect the detection performance.

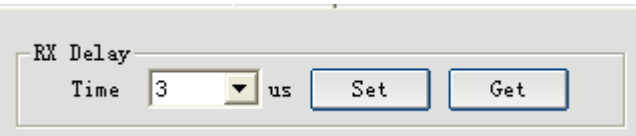

10) Running State

The detectors can be set as [Standby] when no need for a long time or break down.

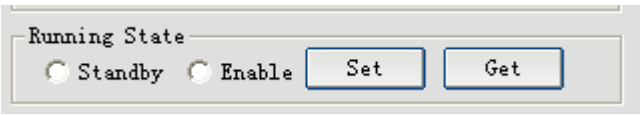

11) Continuous mute alarm function

When the detector breaks down or a tag is wrongly put nearby, it will cause a continuous alarm. Facing this kind of situation and the problem cannot be solved in a short time, users can enable the [Continuous mute alarm function]. The detector will stop siren and the light will be on after 2 minutes of continuous alarm.

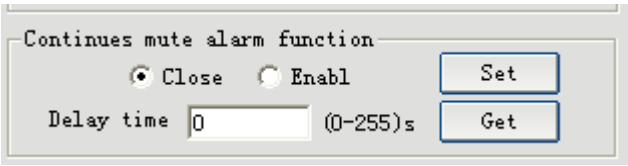

Please note that the [Delay Time] here is the time of standby status after continuous alarm.

12) Light/ Sound Setting

Users can change the setting of light and sound and click [set] to save the setting.

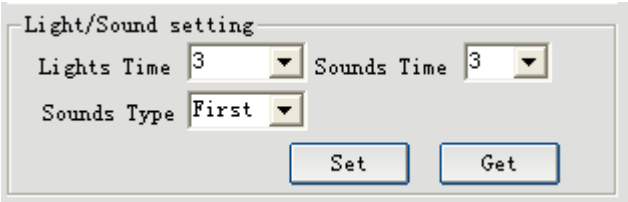

13) TX function

TX function is used for tuning and observing waves of the signal of tags. Default setting is on.

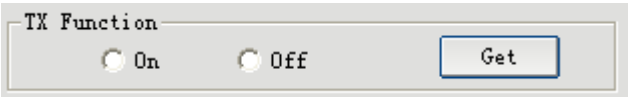

14) TX Width

Promatic 3rd RF Smart EAS main board 6230/6230S has optional TX burst pulse width. The default setting is 8 us.

When the detector set to be MONO and build aisle, it is possible to kill the soft label. Adjust the TX width to make the situation better. Adjusting this parameter may cause a certain influence to the performance of the detector.

Users can decrease the parameter of [TX Width] to 5 us or 3us if the store place the soft labels to the shelf near the detector, and do not want the soft label to be killed by the TX signal.

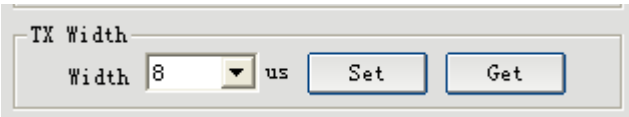

15) Relay Alarm Output

Relay Alarm Output can be controlled when the detector is in different working mode.

Mono: both channels are controllable.

Dual mode (1 master and 1 slave): one channel is controllable.

Double dual mode(1 master and 2 slaves): immutable

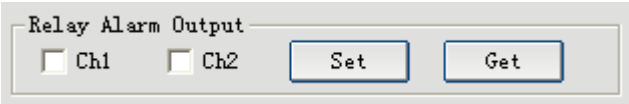

16) Leasing Mode

[Get]: see the period of leasing

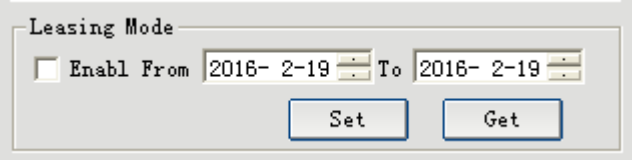

Chapter5. Upgrade

1) Upgrading the product

Replace the main board of standard edition 6230 to enhanced edition 6230S, the detector can be upgraded to better performance. Users just need to pay a little balance.

2) Upgrading the software

Update installation package will be released on the website of Promatic regularly. Download the update package to the installed file and no need to re-install.

Adapter

Adapter shall be installed near the equipment and shall be easily accessible

The plug considered as disconnect device of adapter

AC Adapter
Manufacturer: Powerld Enterprises Co., Ltd
I/p: 100-240V～50/60Hz

O/p: 24V⎓1.7A

Do not expose your device to extreme temperatures lower than - 10°C and higher than + 40°C.

RF Exposure:

The device has been evaluated to meet general RF exposure requirement. The device can be used in any condition without restriction.

FCC Caution

This device complies with part 15 of the FCC Rules. Operation is subject to the following two conditions: (1) This device may not cause harmful interference, and (2) this device must accept any interference received, including interference that may cause undesired operation.

Note: This equipment has been tested and found to comply with the limits for a Class B digital device, pursuant to part 15 of the FCC Rules. These limits are designed to provide reasonable protection against harmful interference in a residential installation. This equipment generates uses and can radiate radio frequency energy and, if not installed and used in accordance with the instructions, may cause harmful interference to radio communications. However, there is no guarantee that interference will not occur in a particular installation. If this equipment does cause harmful interference to radio or television reception, which can be determined by turning the equipment off and on, the user is encouraged to try to correct the interference by one or more of the following measures:
-Reorient or relocate the receiving antenna.

-Increase the separation between the equipment and receiver.
-Connect the equipment into an outlet on a circuit different from that to which the receiver is connected.
-Consult the dealer or an experienced radio/TV technician for help.

Any Changes or modifications not expressly approved by the party responsible for compliance could void the user's authority to operate the equipment.

Regulatory Conformance Hereby, SHENZHEN PROMATIC SECURITY SYSTEMS CO.,LTD. declares that this device is in compliance with the essential requirements and other relevant provisions of Directive 1999/5/EC

CE0700

Chapter6. Contact us

Tel: +86-83432008-857

Email: assist@promaticgroup.com

sales@promaticgroup.com

www.promaticgroup.com