LM843 WiFi 802.11ac / Bluetooth® 5.0 2T2R Combi USB Module

XCVR SMT USB Module

Product	LM843
Part No	See Last Page
Revised	21/OCT/2020
Datasheet Version	1.7

Android Linux Win 7 Win 10

Bluetooth® WIFI

Features

- 802.11ac standard + MIMO on 5G
- 2T2R, Wave-2 Compliant + (2x2) MU-MIMO.
  MIMO offers extended bandwidth for reception and throughput
- USB 2.0 Maximum Throughput 480Mbps (58.7MBps)
- ISM Bands (2.4GHz or 5GHz)
- IEEE support: 802.11 a/ b/ g/ n/ ac/
- Cross Standard Connections
  802.11n connection and/or connected to 802.11a/b/g devices
- Two options are available; 2x IPEX, or 2x RF Line Out
- Theoretical Maximum Bandwidths
  - 173.3 Mbps using 20MHz
  - 400. Mbps using 40MHz
  - 866.7Mbps using 80MHz
- Transmission Modulation — 5MHz / 10MHz / 20MHz / 40MHz / 80MHz OFDM with BPSK, QPSK, 16QAM, 64QAM and 256QAM.
- Bluetooth® 5.0 Dual Mode
  Support for simultaneous connections over LE and BR/EDR
- Enhanced BT/WiFi Coexistence Control to improve transmission quality in different profiles and support for multiple Low Energy positions (Sniff / Sniff Sub-rating)
- REACH / RoHS / Low Halogen compliant.

Overview

Our LM843 Series WiFi 802.11ac + Bluetooth® 5.0 (Dual Mode) Combination SMT Module, offers a wide range of solutions and can support 2-stream 802.11ac with Multi-user MIMO (Multiple-Input, Multiple-Output) connections, while operating under enhanced power management.

Released under BT5.0 the products hardware is compliant to Bluetooth® 5.0 and offers Dual Mode compatabiliy with;
Classic; 2.1 / 3.0 / 3.0+HS using either BR/EDR radio's and Low Energy [LE] connections under Bluetooth® 4.0, 4.1, 4.2 & 5.0
Classic and LE can operate multiple connections simultaneously using the USB 2.0 interface, onboard management for maximising throughput while multiple connections are open under WiFi and/or Bluetooth®.

Certification

The LM843 series will have United States of America FCC and European CE certificaitons completed prior to release.
Further countries will be added during the course of the products life and or by request. Our company has a wealth of experience and has certified products all over the world, with access to a global network of local representatives, enabling fast certification processing when requested. Please enquire with us for further details.

LM843 WiFi 802.11ac / Bluetooth® 5.0 2T2R Combi USB Module

XCVR SMT USB Module

Product	LM843
Part No	See Last Page

General Specification

Wireless

Wireless Standards	WiFi: 802.11ac, a b g n Bluetooth®: • Class 1. Dual Mode: 5.0, v4.2, v4.0 • Classic 2.1, 3.0, 3.0HS, +EDR
Module Type	Host Controller Interface (HCI)
OS Compatibility	Android, Linux, Windows 7, Windows 10
Security	WiFi; WPA, WPA-PSK, WPA2, WPA2 -PSK and WEP (64bit & 128bit) Bluetooth®; Simple Paring
Network Architecture	WiFi; Ad hoc mode (Peer-to-Peer) and Infrastructure mode Software AP; WiFi Direct Bluetooth®; Pico Net; Scatter Net

Hardware

Chipset	Realtek
Antenna	2 x IPEX Antennas, or 2 x RF Line Out
Interfaces	USB 2.0 Maximum Throughput 480Mbps (58.7MBps) / Host Controller Interface (HCI)

Physical Characteristics

Operating Temperature	-20°C to +60°C ambient temperature 5 to 90 % (non-condensing)
Storage Temperature	-20°C to +70°C ambient temperature 5 to 90 % (non-condensing)
Dimensions (L x W x H)	L: 25mm x W:12mm x H:2mm +/- 0.2 tolerance
Weight	6.5g
Certifications	FCC / CE. See our website for further updates.
Compliance	RoHS, REACH and WEEE
Warranty	2 Year Manufacturer RTB
Power Supply	DC 3.3v
Power Consumption	**Input Voltage** / **Power Consumption** Minimum 3.135v Minimum Typical 3.300v Typical Maximum 3.465v Maximum

LM843 WiFi 802.11ac / Bluetooth® 5.0 2T2R Combi USB Module

XCVR SMT USB Module

Product	LM843
Part No	See Last Page

General Specification (Continued)

RF Characteristics	WiFi: 802.11b: 11, 5.5, 2, 1 Mbps 802.11g: 54, 48, 36, 24, 18, 12, 9, 6 Mbps 802.11n: MCS0 to 7 for HT20MHz, MCS0 to 7 for HT40MHz 802.11ac: MCS0 to 8 for HT20MHz, MCS0 to 9 for HT40MHz, NSS1 MCS0 to 9 for VHT80MH
Data Transfer Rate	Bluetooth®: Basic Rate up to 1Mbps, EDR up to 3Mbps Low Energy: LE 1M: 1Mbps LE Coded S=8: 125kbps, LE Coded S=2: 500kbps, LE 2M: 2Mbps
Frequency	2.4GHz and 5GHz ISM Band
Modulation Method	WiFi: CCK, DQPSK, DBPSK, BPSK, QPSK,16QAM, 64QAM, 256QAM Bluetooth®: 8DPSK, π/4 DQPSK, GFSKFSK
Spread Spectrum	WiFi: IEEE 802.11b: CCK (Complementary Code Keying) IEEE 802.11g/n/a/ac:OFDM (Orthogonal Frequency Division Multiplexing) Bluetooth®: FHSS (Frequency Hopping Spread Spectrum)
Operating Channel	WiFi (2.4GHz & 5GHz): 11: (Ch. 1-11) – US (United States) 13: (Ch. 1-13) – ETSI 14: (Ch. 1-14) – TELEC Bluetooth® (2.4GHz): Ch. 0 to 78

LM843 WiFi 802.11ac / Bluetooth® 5.0 2T2R Combi USB Module

XCVR SMT USB Module

Product	LM843
Part No	See Last Page

General Specification (Continued)

RF Characteristics

Tx Output Power (Typical)	WiFi; 17dBm,EVM< 8% – 802.11b@CCK 11Mbps 15dBm,EVM< -25dB – 802.11g@OFDM 54Mbps 14dBm,EVM< -28dB – 802.11n@MCS7_HT20 14dBm,EVM< -28dB – 802.11n@MCS7_HT40 15dBm, EVM< -25dB – 802.11a@OFDM 54Mbps 12dBm, EVM< -32dB – 802.11ac@NSS1 MCS9_BW80 Bluetooth®: Maximum Max +8dBm
Rx Sensitivity (Typical)	WiFi; <-76dBm – 802.11b@11Mbps <-65dBm – 802.11g@54MBps <-64dBm – 802.11n@MCS7_BW20 <-61dBm – 802.11n@MCS7_BW40 <-51dBm – 802.11ac@NSS1_MCS9_BW80 Bluetooth®: <-85dBm,BER<0.01% –Basic rate @1Mbps <-80dBm,BER<0.1% –Enhanced data rate @2,3Mbps <-85dBm,BER<=-30.8% –Low Energy @1Mbps, 125kbps, 500kbps, 2Mbps

LM843 WiFi 802.11ac / Bluetooth® 5.0 2T2R Combi USB Module

XCVR SMT USB Module

Product	LM843
Part No	See Last Page

Pin Outs

Pin Assignments

Pin	Signal	Type	Description
1	GPIO3 /WPS	Output	GPIO3. General Purpose Input/ Output Pin Shared with WPS Pin (Active Low).
2	VDD	Power	DC 3.3V
3	HSDM	I/O	USB 2.0 Transceiver Differential Pair
4	HSDP	I/O	USB 2.0 Transceiver Differential Pair
5	GND	-	Ground
6	GPIO8 /WL_LED	I/O	GPIO8. General Purpose Input / Output Pin / WL LED Pin (Active Low).
7	GND	-	Ground
8	RF_S0	RF	WLAN RF port (if not using IPEX connector)
9	GND	-	Ground
10	GND	-	Ground
11	RF_S1	RF	WLAN / BT RF port (if not using IPEX connector)
12	GND	-	Ground

LM843 WiFi 802.11ac / Bluetooth® 5.0 2T2R Combi USB Module

XCVR SMT USB Module

Product	LM843
Part No	See Last Page

IPEX Connector Dimensions

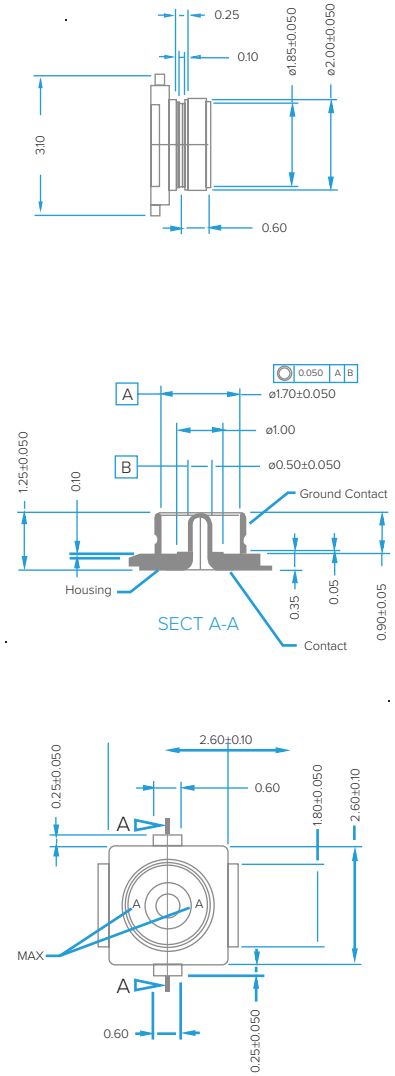

Physical Dimensions / PCB Footprint

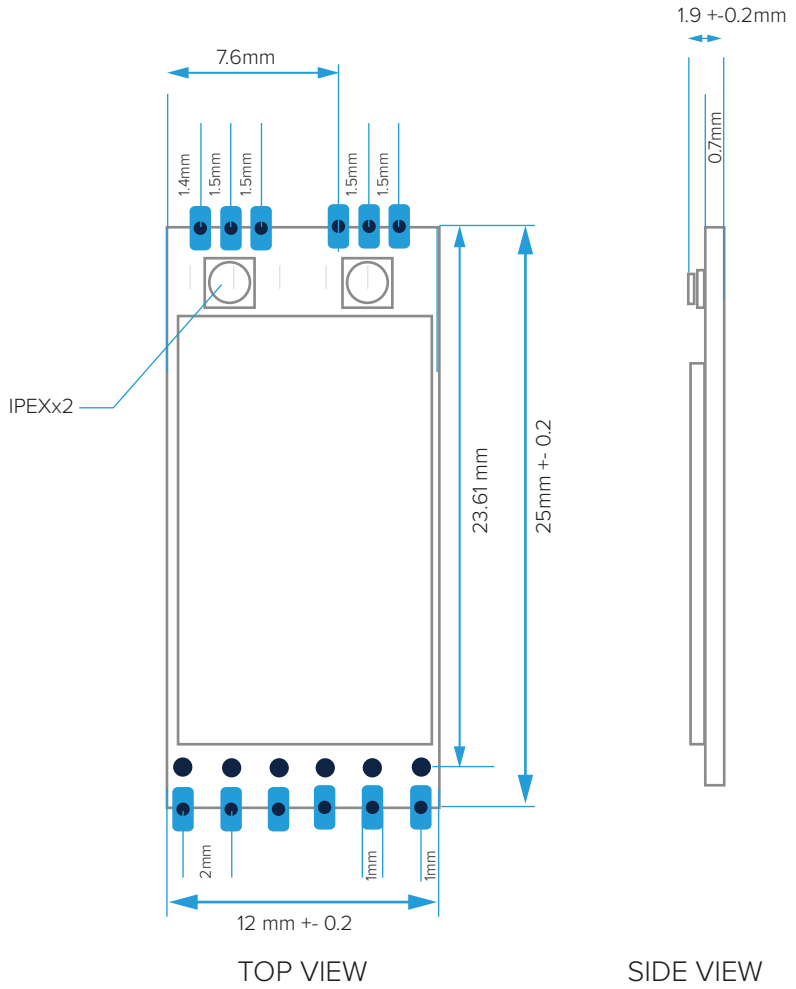

- The external circuit for WiFi activity LED (factory option)

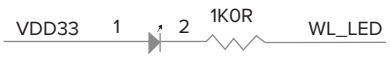

- The external circuit for WiFi activity WPS display

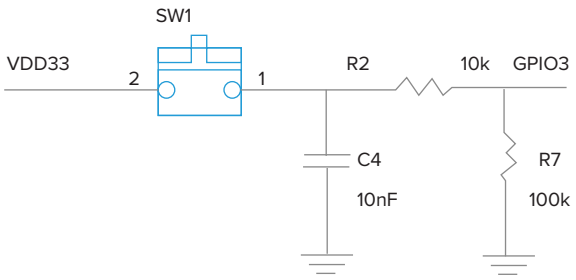

GPIO8 Pin Out
Option for WiFi activity LED (factory option)

LM843 WiFi 802.11ac / Bluetooth® 5.0 2T2R Combi USB Module

XCVR SMT USB Module

Product	LM843
Part No	See Last Page

Antenna Output Options

RF Output is offered as either 2x IPEX or 2x Half Hole Terminal

Neither of these modules have an antenna, for certification purposes we have certifed these using an IPEX 3dBi IPEX to SMA Antenna, this enables your design to use any antenna up to a maximum of 3dBi Gain, above this level and our certification will not be valid.

We offer free design in support, either to assist you or your third-party to ensure the correct placement and/or advice on how best an antenna should be supported.

RF Line Out Option

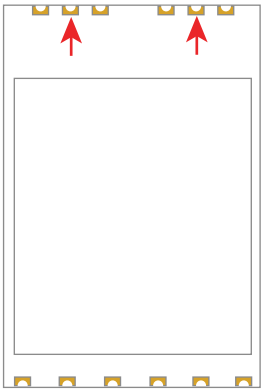

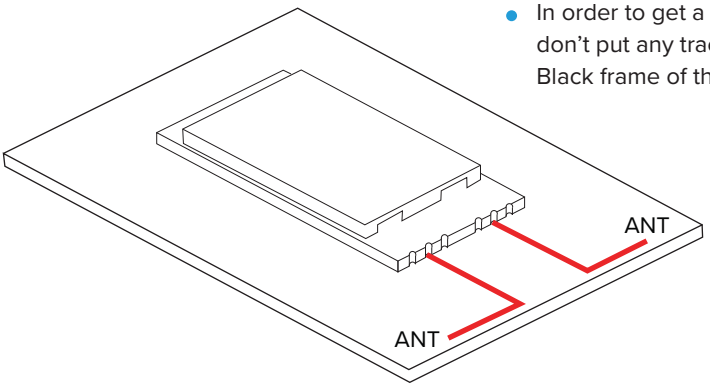

- In order to get a better RF performance, please don't put any trace or copper plane under the Black frame of the module.
- Please have the impedance of feed lines to be 50 ohms from the RF output pin to Antenna.

2 x IPEX Option

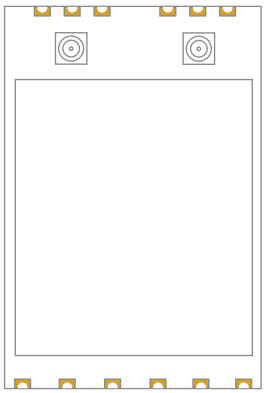

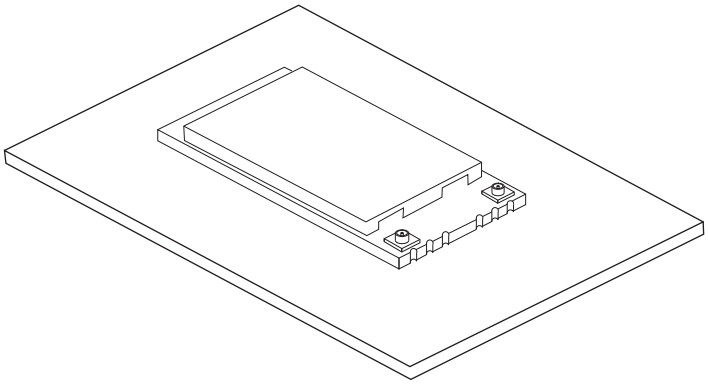

LM843 WiFi 802.11ac / Bluetooth® 5.0 2T2R Combi USB Module

XCVR SMT USB Module

Product	LM843
Part No	See Last Page

XCVR Block Diagram (2 x RF Half Hole Line Out)

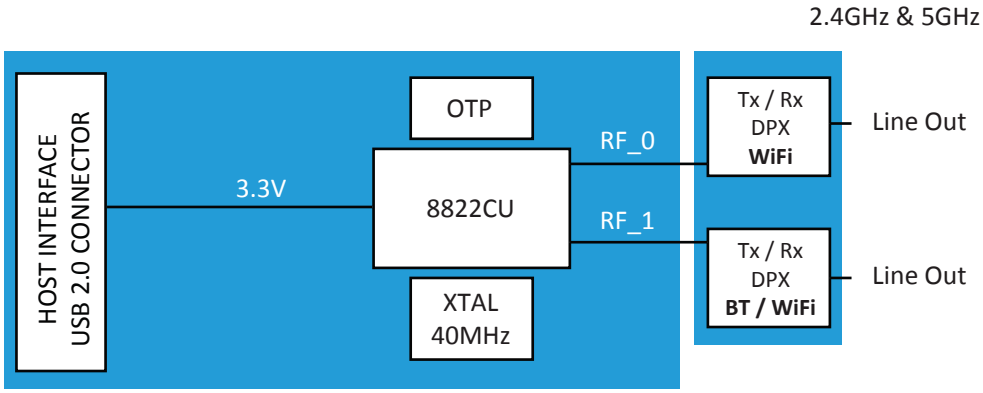

XCVR Block Diagram (2 x IPEX Antennas)

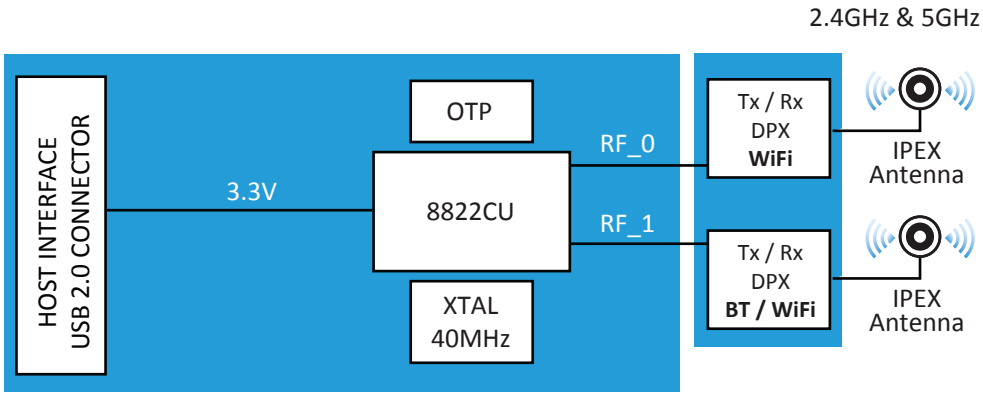

Extended Temperature Range

Our SMT Module Low Tempreature Product Update is changing a 0c rated product into a -20c rated product.

In this update we ensure all items in the BOM except the main IC, are components rated at -40c, the Realtek IC is made from material tested and approved for -30c, rated at 0 due to a range of factors, such as low demand for -40 compliance, cost of -40c rated material is approved and tested at -60c and is expensive to manage.

Our products undergo an intensive test regime within which we temperature test and conduct a range of functions via our test program continuously for 72 hours at -40c, -20x 0c and 20c. If during this test we see no gradual drop off in performance and any initial drop off is less than 15% we will then pass the product as approved to support -20c.

We provide warranty on all LM843 -20c products for 2 years.

LM843 WiFi 802.11ac / Bluetooth® 5.0 2T2R Combi USB Module

XCVR SMT USB Module

Product	LM843
Part No	See Below

Tape and Reel Packaging

Tape Dimensions

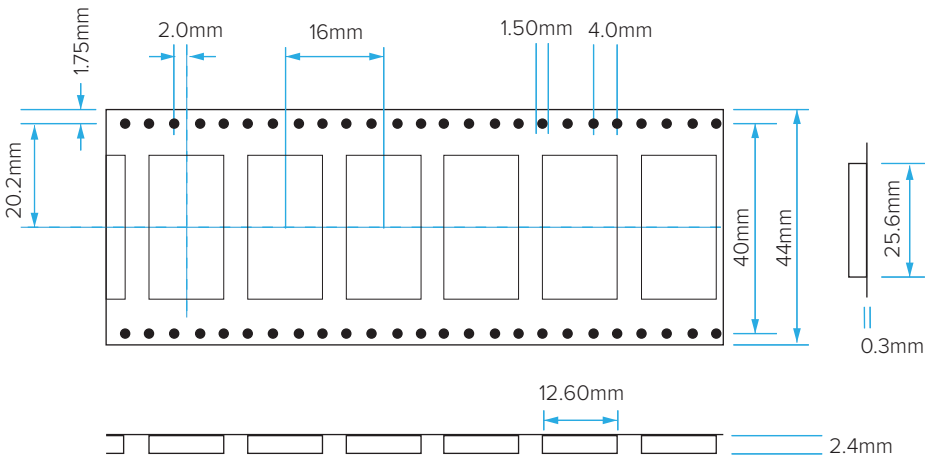

Reel Dimensions

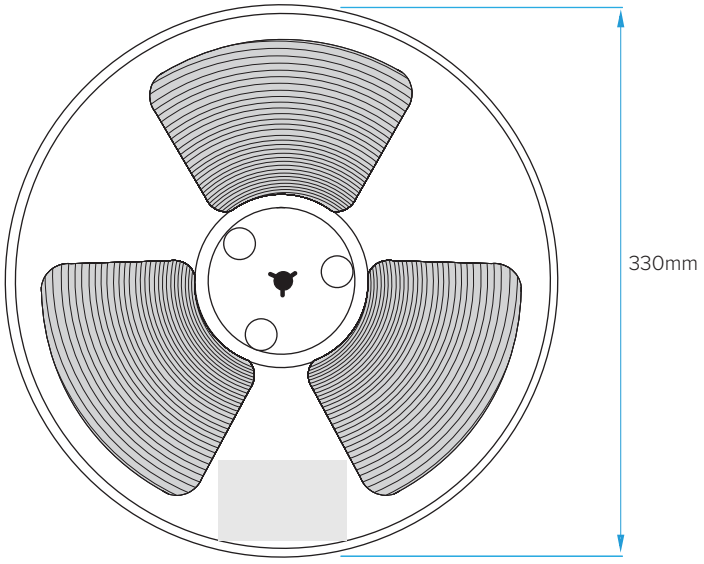

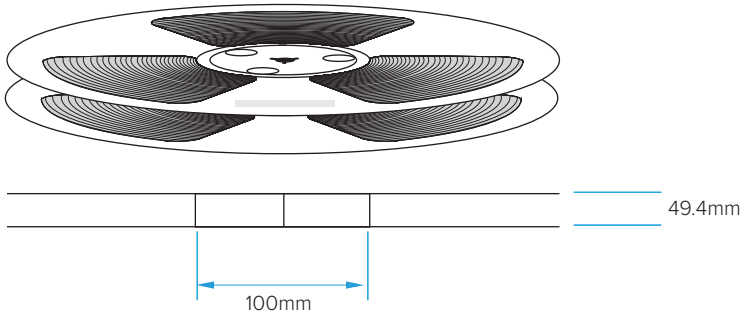

Notes

- Carton Dimensions (L x W x H): 395mm x 360mm x 305mm

Quantities

- 1500 modules per Tape
- 5 Boxes per Carton
- 7500 modules per carton

LM843 WiFi 802.11ac / Bluetooth® 5.0 2T2R Combi USB Module

XCVR SMT USB Module

Product	LM843
Part No	See Below

Packaging for Tape & Reel / Tray

The trays/reels are stacked and inserted into an anti-static vacuum bag with a Humidity Indicator Card.

On the outside of the bag are labels for Anti-Static, Model Name and Moisture Sensitivity Levels.

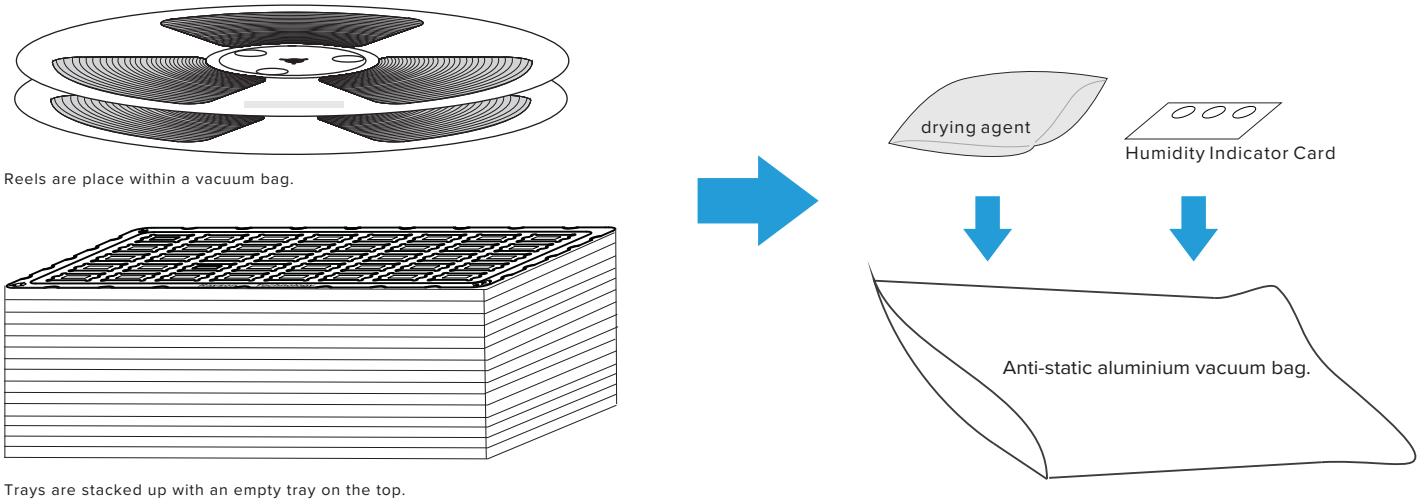

The vacuum bag is placed inside the box and a Model Name Label stuck on the front-side of each box.

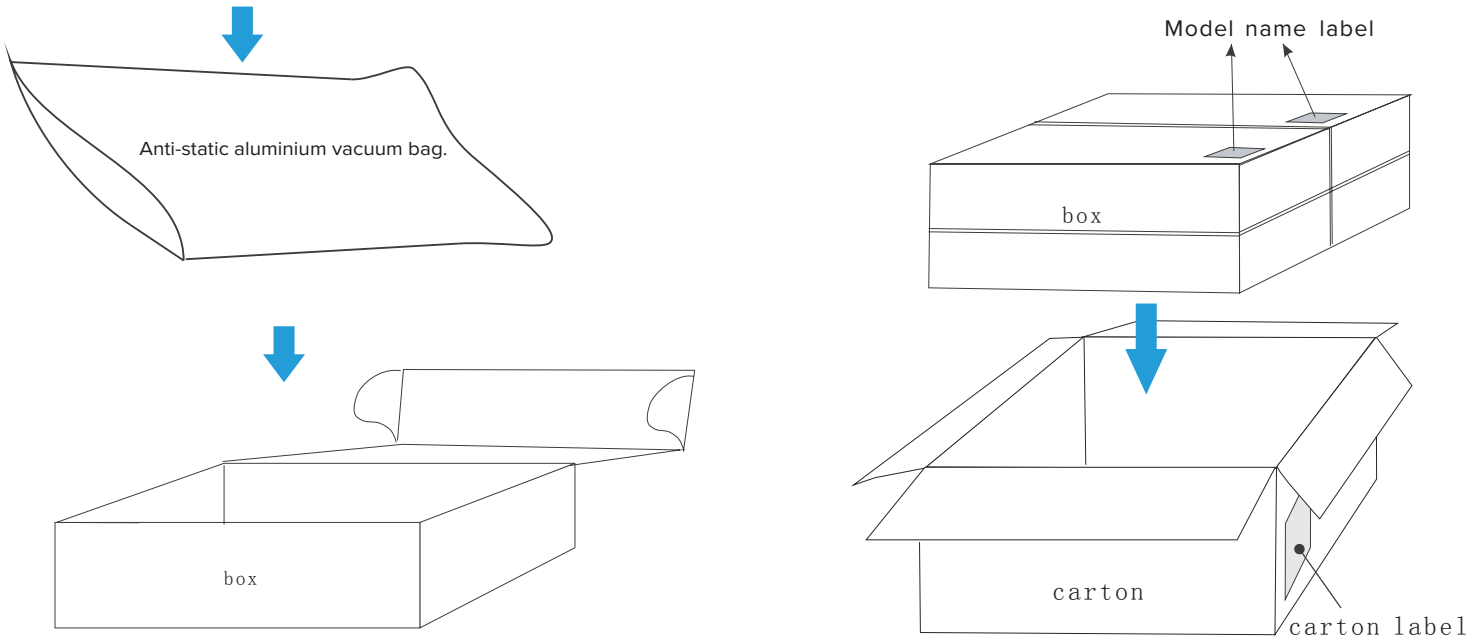

Each carton contains 4 boxes.

LM843 WiFi 802.11ac / Bluetooth® 5.0 2T2R Combi USB Module

XCVR SMT USB Module

Product	LM843
Part No	See Below

Datasheet Version Notes

v0.2	27 SEP 2019	Revised information throughout.
v0.3	03 OCT 2019	Revised information throughout.
v1.0	29 NOV2019	Win 10 removal. Antenna Option diagrams added.
v1.1	24 FEB 2020	New image.
v1.2	17 MAR 2020	Antenna Option Revisions.
v1.3	11 MAY 2020	Physical Dimensions and Diagram updated.
v1.4	15 MAY 2020	Removed PCB Footprint, appended PCB Footprint title to Physical Dimensions illustration.
v1.5	30 JUL 2020	Android, Linux, Windows 7, Windows 10.
v1.6	10 AUG 2020	Flip Block Diagram layout.
v1.7	21 OCT 2020	Amended certified antenna gain.

LM843 WiFi 802.11ac / Bluetooth® 5.0 2T2R Combi USB Module

XCVR SMT USB Module

Product	LM843
Part No	See Below

LM843 Ordering Options

MFT Part No.	Product Description	Invoice Description	RF Bands	Packaging	Expected EOL
843-8430	MOD 802.11ac BT5.0 USB 2T2R IPEX PCS/SP		ETSI	S/SP	2029
843-8431	MOD 802.11ac BT5.0 USB 2T2R IPEX PCS/SP		US	S/SP	2029
843-8432	MOD 802.11ac BT5.0 USB 2T2R IPEX TRAY		ETSI	TRAY	2029
843-8433	MOD 802.11ac BT5.0 USB 2T2R IPEX TRAY		US	TRAY	2029
843-8434	MOD 802.11ac BT5.0 USB 2T2R IPEX T&R		ETSI	T&R	2029
843-8435	MOD 802.11ac BT5.0 USB 2T2R IPEX T&R		US	T&R	2029
843-8436	MOD 802.11ac BT5.0 USB 2T2R RF_LINE PCS/SP		ETSI	S/SP	2029
843-8437	MOD 802.11ac BT5.0 USB 2T2R RF_LINE PCS/SP		US	S/SP	2029
843-8438	MOD 802.11ac BT5.0 USB 2T2R RF_LINE TRAY		ETSI	TRAY	2029
843-8439	MOD 802.11ac BT5.0 USB 2T2R RF_LINE TRAY		US	TRAY	2029
843-8440	MOD 802.11ac BT5.0 USB 2T2R RF_LINE T&R		ETSI	T&R	2029
843-8441	MOD 802.11ac BT5.0 USB 2T2R RF_LINE T&R		US	T&R	2029

- See LM240 IPEX Cable for SMA Antennas - https://www.lm-technologies.com/product/ipex-to-rp-sma-male-jack-cable-100mm-lm240/

- Product User Guides, Manuals and Configuration Software can be downloaded via our website - http://www.lm-technologies.com/downloads

LM843 WiFi 802.11ac / Bluetooth® 5.0 2T2R Combi USB Module

XCVR SMT USB Module

Product	LM843
Part No	See Below

List of applicable FCC rules

FCC Part 15.247, FCC Part 15.407

Specific operational use conditions

This product is a Single-modular transmitter policy independent of any host. Not applicable.

Limited module procedures

This product is a Single-modular transmitter. It is not a limited module. Not applicable.

Trace antenna designs

This product has an Integral antenna. Not applicable.

RF exposure considerations

This equipment complies with the FCC RF radiation exposure limits set forth for an uncontrolled environment. This equipment should be installed and operated with a minimum distance of 20cm between the radiator and any part of your body.

Antennas

This product has an Integral antenna. Not applicable.

Label and compliance information

Remind end customers to add "Contain FCC ID: VVX-LM843".

Information on test modes and additional testing requirements

Contact LM Technologies Ltd. will provide stand-alone modular transmitter test mode. Additional testing and certification may be necessary when multiple modules are used in a host.

Additional testing, Part 15 Subpart B disclaimer

To ensure compliance with all non-transmitter functions the host manufacturer is responsible for ensuring compliance with the module(s) installed and fully operational. For example, if a host was previously authorized as an unintentional radiator under the Supplier’ s Declaration of Conformity procedure without a transmitter certified module and a module is added, the host manufacturer is responsible for ensuring that the after the module is installed and operational the host continues to be compliant with the Part 15B unintentional radiator requirements. Since this may depend on the details of how the module is integrated with the host, LM Technologies Ltd. shall provide guidance to the host manufacturer for compliance with the Part 15B requirements.

- Product User Guides, Manuals and Configuration Software can be downloaded via our website - http://www.lm-technologies.com/downloads

FCC Warning

This device complies with Part 15 of the FCC Rules. Operation is subject to the following two conditions: (1) This device may not cause harmful interference, and (2) this device must accept any interference received, including interference that may cause undesired operation.

NOTE 1: Any changes or modifications to this unit not expressly approved by the party responsible for compliance could void the user's authority to operate the equipment.

FCC Radiation Exposure Statement:

This equipment complies with FCC radiation exposure limits set forth for an uncontrolled environment. End users must follow the specific operating instructions for satisfying RF exposure compliance.

This module certified that complies with RF exposure requirement under mobile or fixed condition, this module is to be installed only in mobile or fixed applications.

A mobile device is defined as a transmitting device designed to be used in other than fixed locations and to generally be used in such a way that a separation distance of at least 20 centimeters is normally maintained between the transmitter's radiating structure(s) and the body of the user or nearby persons. Transmitting devices designed to be used by consumers or workers that can be easily re-located, such as wireless devices associated with a personal computer, are considered to be mobile devices if they meet the 20 centimeter separation requirement.

A fixed device is defined as a device is physically secured at one location and is not able to be easily moved to another location.

Note 2: Any modifications made to the module will void the Grant of Certification, this module is limited to OEM installation only and must not be sold to end-users, end-user has no manual instructions to remove or install the device, only software or operating procedure shall be placed in the end-user operating manual of final products.

Note 3: Additional testing and certification may be necessary when multiple modules are used.

Note 4: The module may be operated only with the antenna with which it is authorized. Any antenna that is of the same type and of equal or less directional gain as an antenna that is authorized with the intentional radiator may be marketed with, and used with, that intentional radiator.

Note 5: To ensure compliance with all non-transmitter functions the host manufacturer is responsible for ensuring compliance with the module(s) installed and fully operational. For example, if a host was previously authorized as an unintentional radiator under the Supplier' s Declaration of Conformity procedure without a transmitter certified module and a module is added, the host manufacturer is responsible for ensuring that the after the module is installed and operational the host continues to be compliant with the Part 15B unintentional radiator requirements. Since this may depend on the details of how the module is integrated with the host, LM Technologies Ltd. shall provide guidance to the host manufacturer for compliance with the Part 15B requirements.

Note 6: FCC ID label on the final system must be labeled with "Contains FCC ID: VVX-LM843" or "Contains transmitter module FCC ID: VVX-LM843".

Note 7: For all products market in US, OEM has to limit the operation channels in CH1 to CH11 for 2.4G band by supplied firmware programming tool. OEM shall not supply any tool or info to the end-user regarding to Regulatory Domain change.

IC WARNING

This device contains licence-exempt transmitter(s) that comply with Innovation, Science and Economic Development Canada's licence-exempt RSS(s). Operation is subject to the following two conditions:

(1) This device may not cause interference.

(2) This device must accept any interference, including interference that may cause undesired operation of the device.

L'émetteur/récepteur exempt de licence contenu dans le présent appareil est conforme aux CNR d'Innovation, Sciences et Développement économique Canada applicables aux appareils radio exempts de licence. L'exploitation est autorisée aux deux conditions suivantes:

1. L'appareil ne doit pas produire de brouillage;
2.. L'appareil doit accepter tout brouillage radioélectrique subi, même si le brouillage est susceptible d'en compromettre le fonctionnement.

compromettre le fonctionnement.

This radio transmitter [enter the device's ISED certification number] has been approved by Innovation, Science and Economic Development Canada to operate with the antenna types listed below, with the maximum permissible gain indicated. Antenna types not included in this list that have a gain greater than the maximum gain indicated for any type listed are strictly prohibited for use with this device.

No.	Antenna Type	Gain	Impedance
1	External uniqueness Antenna	3dBi	50ohm

IC Radiation Exposure Statement:

This device and its antenna(s) must not be co-located with any other transmitters except in accordance with IC multi-transmitter product procedures. Referring to the multi-transmitter policy, multiple-transmitter(s) and module(s) can be operated simultaneously without reassessment permissive change.

Cet appareil et son antenne (s) ne doit pas être co-localisés ou fonctionnement en association avec une autre antenne ou transmetteur.

This equipment complies with IC RSS-102 radiation exposure limits set forth for an uncontrolled environment. This equipment should be installed and operated with minimum distance 20cm between the radiator & your body.

Cet équipement est conforme aux limites d'exposition aux rayonnements IC établies pour un environnement non contrôlé. Cet équipement doit être installé et utilisé avec un minimum de 20cm de distance entre la source de rayonnement et votre corps.

- Product User Guides, Manuals and Configuration Software can be downloaded via our website - http://www.lm-technologies.com/downloads

This module is limited to OEM installation only and must not be sold to end-users, end-user has no manual instructions to remove or install the device, only software or operating procedure shall be placed in the end-user operating manual of final products. Additional testing and certification may be necessary when multiple modules are used.

Any changes or modifications not expressly approved by the manufacturer could void the user's authority to operate this equipment.

The final end product must be labeled in a visible area with the following " Contains IC: 10531A-LM843 ".