TEST REPORT

N°: 158378-729799-B **Version : 01**

Subject	**Radio spectrum matters tests according to standards: 47 CFR Part 15.407 & RSS 247 Issue 2(DFS Only)**
Issued to	**SAGEMCOM 250, route de l'Empereur 92848 – RUEIL MALMAISON FRANCE**
Apparatus under test	
Product	**Home Router Fast 5260**
Trade mark	**SAGEMCOM**
Manufacturer	**SAGEMCOM**
Model under test	**FAST 5260**
Serial number	**NQ1736013023187**
FCC ID	**VW3FAST5260CV**
Test date	: November 13, 2018 to December 20, 2018
Test location	Fontenay Aux Roses
Composition of document	93 pages
Document issued on	December 21, 2018

Written by :
Armand MAHOUNGOU
Tests operator

Approved by :
Arnaud FAYETTE
Technical manager

LABORATOIRE CENTRAL DES INDUSTRIES ELECTRIQUES
S.A.S au capital de 15 745 984 €
RCS Nanterre B 408 363 174
LCIE
F - 92266 FONTENAY AUX ROSES

This document shall not be reproduced, except in full, without the written approval of the LCIE. This document contains results related only to the items tested. It does not imply the conformity of the whole production to the items tested. Unless otherwise specified, the decision of conformity takes into account the uncertainty of measurement. This document doesn't anticipate any certification decision.

PUBLICATION HISTORY

Version	Date	Author	Modification
01	December 21, 2018	Armand MAHOUNGOU	Creation of the document

SUMMARY

1. TEST PROGRAM 4
2. EQUIPMENT UNDER TEST: CONFIGURATION (DECLARED BY PROVIDER) 5
3. DFS DETECTION THRESHOLDS DETERMINATION, REFERENCE NOISE LEVEL & CHANNEL LOADING 20
4. DYNAMIC FREQUENCY SELECTION (DFS): CHANNEL AVAILABILITY CHECK & DFS DETECTION THRESHOLD 28
5. DYNAMIC FREQUENCY SELECTION (DFS): U-NII DETECTION BANDWIDTH 33
6. DYNAMIC FREQUENCY SELECTION (DFS): STATISTICAL PERFORMANCE CHECK 38
7. DYNAMIC FREQUENCY SELECTION (DFS): CHANNEL CLOSING TRANSMISSION TIME & CHANNEL MOVE TIME 44
8. DYNAMIC FREQUENCY SELECTION (DFS): NON-OCCUPANCY PERIOD 48
9. ANNEX 1: U-NII DETECTION BANDWIDTH DATA SHEET 52
10. ANNEX 2: STATISTICAL PERFORMANCE CHECK DATA SHEET 53
11. ANNEX 3: RADAR TEST SIGNAL TYPE 5 & 0 59
12. ANNEX 4 : FAMILY PRODUCT 89
13. UNCERTAINTIES CHART 93

1. TEST PROGRAM

References

- **47 CFR Part 15.407 (DFS requirements)**
- **RSS 247 Issue 2 (DFS requirements)**
- **KDB 905462 D02 UNII DFS Compliance Procedures New Rules v02**
- **KBD 905462 D04 Test Mode New Rules v01**
- **KDB 905462 D03 Client Without DFS New Rules v01r02**
- **KDB 905462 D06 802.11 Channel Plans New Rules v02**
- **KDB905462 D07 Overview UNII Rules v02**

Radio requirement:

Clause (47CFR Part 15.407 & RSS 247 Issue 2) Test Description	Test result - Comments			
Channel Availability Check Time & DFS Detection Threshold	☑ **PASS**	☐ **FAIL**	☐ **NA(1)(2)**	☐ **NP(3)**
U-NII Detection Bandwidth	☑ **PASS**	☐ **FAIL**	☐ **NA(1)**	☐ **NP(3)**
Statistical Performance Check & DFS Detection Threshold	☑ **PASS**	☐ **FAIL**	☐ **NA**	☐ **NP(3)**
Channel Closing Transmission Time & Channel Move Time	☑ **PASS**	☐ **FAIL**	☐ **NA**	☐ **NP(3)**
Non-occupancy period	☑ **PASS**	☐ **FAIL**	☐ **NA(1)**	☐ **NP(3)**
This table is a summary of test report, see conclusion of each clause of this test report for detail.				

(1): Client without radar detection
(2): Client with radar detection
(3): Limited program

2. EQUIPMENT UNDER TEST: CONFIGURATION (DECLARED BY PROVIDER)

2.1. HARDWARE IDENTIFICATION (EUT AND AUXILIARIES):

Equipment under test (EUT):

SAGEMCOM FAST 5260 **Serial Number: NQ1736013023187**

Front face

Back face

Ethernet cable

Power supply

Equipment Under Test

Power supply

Power supply

Equipment Under Test

Inputs/outputs - Cable:

Access	Type	Length used (m)	Declared <3m	Shielded	Under test	Comments
Power supply	-	-	☐	☐	☐	-
Ethernet cable	-	-	☐	☐	☐	-

Auxiliary equipment used during test:

Type	Reference	Sn	Comments
Wireless AC1750 Dual Band Gigabit Cloud Router	DLINK DIR-868L	RZ641E8004888	FCC ID:RRK2012060056-1 IC ID: 4833A-WMCA01A1
Laptop	-	-	Use to set the EUT & the communication traffic
Laptop	-	-	Use to set the EUT & the communication traffic
Power Supply N°1	MSA-C2500IS12.0-30D-US	191348119	-
Power Supply N°2	PL-D030120250ZL	191367698	-
Power Supply N°3	NBS30E120250VU	191287197	-

Equipment information:

Type:	**WIFI**			
Frequency band:	☑ 5150MHz-5250MHz	☑ 5250MHz-5350MHz	☑ 5470MHz-5725MHz	
	☑ 5725MHz-5850MHz			
Standard:	☑ 802.11a	☑ 802.11n HT20	☑ 802.11n HT40	
	☑ 802.11ac VHT20	☑ 802.11ac VHT40	☑ 802.11ac VHT80	
	☐ 802.11ac VHT160			
Spectrum Modulation:	☑ OFDM			
Channel bandwidth:	☑ 20MHz	☑ 40MHz	☑ 80MHz	☐ 160MHz
Antenna Type:	☑ Integral	☐ External	☐ Dedicated	
Antenna connector:	☑ Yes	☐ No	☐ Temporary for test	
Transmit chains:	☐ 1	☐ 2	☑ 3	☐ 4
	☐ 5	☐ 6	☐ 7	☐ 8
TPC:	☑ Yes		☐ No	
Receiver chains	☐ 1	☐ 2	☑ 3	☐ 4
	☐ 5	☐ 6	☐ 7	☐ 8
Type of equipment:	☑ Stand-alone	☐ Plug-in	☐ Combined	
Operating temperature range:	Tmin:	☐ -20°C	☑ 0°C	☐ X °C
	Tnom:	20°C		
	Tmax:	☐ 35°C	☐ 55°C	☑ 45 °C
Type of power source:	☑ AC power supply	☐ DC power supply	☐ Battery Battery Type	
Operating voltage range:	Vmin:	☑ 100 V/60Hz	☐ X Vdc	
	Vnom:	☑ 110V/60Hz	☐ X Vdc	
	Vmax	☑ 120 V/60Hz	☐ X Vdc	
Mode:	☑ Master	☐ Slave with radar detection	☐ Slave without radar detection	
	☑ Bridge		☐ Mesh	
Fixed outdoor P to P/M application:	☐ Yes		☑ No	
System architectures:	☑ IP based		☐ Frame based	
Time require for EUT to complete its power cycle on	X s			
User access restriction:	☑ Yes (The manufacturer declares that information regarding the parameters of the detected Radar Waveforms is not available to the end user)		☐ No	

Antenna Characteristic			
Antenna assembly	**Gain (dBi)**	**Frequency Band (MHz)**	**Impedance(Ω)**
1	2.22	5150-5850	50
2	2.22	5150-5850	50
3	2.22	5150-5850	50
Accumulated	7	5150-5850	50

Accumulated gain calculation		
Formula used for calculation	**KDB**	**Correlated**
$Directional\ Gain = 10 * \log\left(\frac{\left(10^{\frac{G_1}{20}} + 10^{\frac{G_2}{20}} + 10^{\frac{G_3}{20}} + \cdots + 10^{\frac{G_N}{20}}\right)^2}{N}\right)$	KDB 662911 D01 v02r01*	☑ Yes / ☐ No

*§ F) 2) d) i)

CHANNEL PLAN		
802.11a / 802.11n HT20/ 802.11ac VHT20		
Channel	**Frequency (MHz)**	**Available Channel**
36	5180	☑
40	5200	☑
44	5220	☑
48	5240	☑
52	5260	☑
56	5280	☑
60	5300	☑
C6=64	5320	☑
C7=100	5500	☑
104	5520	☑
108	5540	☑
112	5560	☑
116	5580	☑
120	5600	☐
124	5620	☐
128	5640	☐
132	5660	☑
136	5680	☑
140	5700	☑
144	5720	☐
149	5745	☑
153	5765	☑
157	5785	☑
161	5805	☑
165	5825	☑

CHANNEL PLAN		
802.11n HT40/ 802.11ac VHT40		
Channel	**Frequency (MHz)**	**Available Channel**
36+40	5190	☑
44+48	5230	☑
52+56	5270	☑
C17=60+64	5310	☑
C18=100+104	5510	☑
108+112	5550	☑
116+120	5590	☐
124+128	5630	☐
132+136	5670	☑
140+144	5710	☐
149+153	5755	☑
157+161	5795	☑

CHANNEL PLAN		
802.11ac VHT80		
Channel	**Frequency (MHz)**	**Available Channel**
36+40+44+48	5210	☑
C25=52+56+60+64	5290	☑
C26=100+104+108+112	5530	☑
116+120+124+128	5610	☐
132+136+140+144	5690	☐
149+153+157+161	5775	☑

No DFS Channel
DFS Channel
Weather DFS Channel (Not Authorised for RSS-247)

DATA RATE		
802.11a		
Data Rate (Mbps)	**Modulation Type**	**Modulation Worst Case**
6	BPSK	☑
9	BPSK	☐
12	QPSK	☐
18	QPSK	☐
24	16-QAM	☐
36	16-QAM	☐
48	64-QAM	☐
54	64-QAM	☐

DATA RATE									
802.11n HT20									
Available for EUT	MCS Index	Spatial streams	Modulation				Data Rate (Mbps)		Worst Case Modulation
							(GI = 800ns)	(GI = 400ns)	
☑	0	1	BPSK				6.5	7.2	☐
☑	1	1	QPSK				13	14.4	☐
☑	2	1	QPSK				19.5	21.7	☐
☑	3	1	16-QAM				26	28.9	☐
☑	4	1	16-QAM				39	43.3	☐
☑	5	1	64-QAM				52	57.8	☐
☑	6	1	64-QAM				58.5	65	☐
☑	7	1	64-QAM				65	72.2	☐
☑	8	2	BPSK				13	14.4	☐
☑	9	2	QPSK				26	28.9	☐
☑	10	2	QPSK				39	43.3	☐
☑	11	2	16-QAM				52	57.8	☐
☑	12	2	16-QAM				78	86.7	☐
☑	13	2	64-QAM				104	115.6	☐
☑	14	2	64-QAM				117	130.3	☐
☑	15	2	64-QAM				130	144.4	☐
☑	16	3	BPSK				19.5	21.7	☑
☑	17	3	QPSK				39	43.3	☐
☑	18	3	QPSK				58.5	65	☐
☑	19	3	16-QAM				78	86.7	☐
☑	20	3	16-QAM				117	130	☐
☑	21	3	64-QAM				156	173.3	☐
☑	22	3	64-QAM				175.5	195	☐
☑	23	3	64-QAM				195	216.7	☐
☐	24	4	BPSK				26	28.9	☐
☐	25	4	QPSK				52	57.8	☐
☐	26	4	QPSK				78	86.7	☐
☐	27	4	16-QAM				104	115.6	☐
☐	28	4	16-QAM				156	173.3	☐
☐	29	4	64-QAM				208	231.1	☐
☐	30	4	64-QAM				234	260	☐
☐	31	4	64-QAM				260	288.9	☐
☑	32	1	BPSK	-	-	-	-	-	☐
☑	33	2	16-QAM	QPSK	-	-	39	43.3	☐
☑	34	2	64-QAM	QPSK	-	-	52	57.8	☐
☑	35	2	64-QAM	16-QAM	-	-	65	72.2	☐
☑	36	2	16-QAM	QPSK	-	-	58.5	65	☐
☑	37	2	64-QAM	QPSK	-	-	78	86.7	☐
☑	38	2	64-QAM	16-QAM	-	-	97.5	108.3	☐
☑	39	3	16-QAM	QPSK	QPSK	-	52	57.8	☐
☑	40	3	16-QAM	16-QAM	QPSK	-	65	72.2	☐
☑	41	3	64-QAM	QPSK	QPSK	-	65	72.2	☐
☑	42	3	64-QAM	16-QAM	QPSK	-	78	86.7	☐
☑	43	3	64-QAM	16-QAM	16-QAM	-	91	101.1	☐
☑	44	3	64-QAM	64-QAM	QPSK	-	91	101.1	☐
☑	45	3	64-QAM	64-QAM	16-QAM	-	104	115.6	☐
☑	46	3	16-QAM	QPSK	QPSK	-	78	86.7	☐
☑	47	3	16-QAM	16-QAM	QPSK	-	97.5	108.3	☐
☑	48	3	64-QAM	QPSK	QPSK	-	97.5	108.3	☐
☑	49	3	64-QAM	16-QAM	QPSK	-	117	130	☐
☑	50	3	64-QAM	16-QAM	16-QAM	-	136.5	151.7	☐
☑	51	3	64-QAM	64-QAM	QPSK	-	136.5	151.7	☐
☑	52	3	64-QAM	64-QAM	16-QAM	-	156	173.3	☐
☐	53	4	16-QAM	QPSK	QPSK	QPSK	65	72.2	☐
☐	54	4	16-QAM	16-QAM	QPSK	QPSK	78	86.7	☐
☐	55	4	16-QAM	16-QAM	16-QAM	QPSK	91	101.1	☐
☐	56	4	64-QAM	QPSK	QPSK	QPSK	78	86.7	☐
☐	57	4	64-QAM	16-QAM	QPSK	QPSK	91	101.1	☐
☐	58	4	64-QAM	16-QAM	16-QAM	QPSK	104	115.6	☐
☐	59	4	64-QAM	16-QAM	16-QAM	16-QAM	117	130	☐
☐	60	4	64-QAM	QPSK	QPSK	QPSK	104	115.6	☐
☐	61	4	64-QAM	16-QAM	16-QAM	QPSK	117	130	☐
☐	62	4	64-QAM	16-QAM	16-QAM	16-QAM	130	144.4	☐
☐	63	4	64-QAM	64-QAM	64-QAM	QPSK	130	144.4	☐
☐	64	4	64-QAM	64-QAM	64-QAM	16-QAM	143	158.9	☐
☐	65	4	16-QAM	QPSK	QPSK	QPSK	97.5	108.3	☐
☐	66	4	16-QAM	16-QAM	QPSK	QPSK	117	130	☐
☐	67	4	16-QAM	16-QAM	16-QAM	QPSK	136.5	151.7	☐
☐	68	4	64-QAM	QPSK	QPSK	QPSK	117	130	☐
☐	69	4	64-QAM	16-QAM	QPSK	QPSK	136.5	151.7	☐
☐	70	4	64-QAM	16-QAM	16-QAM	QPSK	156	173.3	☐
☐	71	4	64-QAM	16-QAM	16-QAM	16-QAM	175.5	195	☐
☐	72	4	64-QAM	64-QAM	QPSK	QPSK	156	173.3	☐
☐	73	4	64-QAM	64-QAM	16-QAM	QPSK	175.5	195	☐
☐	74	4	64-QAM	64-QAM	16-QAM	16-QAM	195	216.7	☐
☐	75	4	64-QAM	64-QAM	64-QAM	QPSK	195	216.7	☐
☐	76	4	64-QAM	64-QAM	64-QAM	16-QAM	214.5	238.3	☐

DATA RATE									
802.11n HT40									
Available for EUT	MCS Index	Spatial streams	Modulation				Data Rate (Mbps)		Worst Case Modulation
							(GI = 800ns)	(GI = 400ns)	
☑	0	1	BPSK				13	15	☐
☑	1	1	QPSK				27	30	☐
☑	2	1	QPSK				40.5	45	☐
☑	3	1	16-QAM				54	60	☐
☑	4	1	16-QAM				81	90	☐
☑	5	1	64-QAM				108	120	☐
☑	6	1	64-QAM				121.5	135	☐
☑	7	1	64-QAM				135	150	☐
☑	8	2	BPSK				27	30	☐
☑	9	2	QPSK				54	60	☐
☑	10	2	QPSK				81	90	☐
☑	11	2	16-QAM				108	120	☐
☑	12	2	16-QAM				162	180	☐
☑	13	2	64-QAM				216	240	☐
☑	14	2	64-QAM				243	270	☐
☑	15	2	64-QAM				270	300	☐
☑	16	3	BPSK				40.5	45	☐
☑	17	3	QPSK				81	90	☐
☑	18	3	QPSK				121.5	135	☐
☑	19	3	16-QAM				162	180	☐
☑	20	3	16-QAM				243	270	☐
☑	21	3	64-QAM				324	360	☐
☑	22	3	64-QAM				364.5	405	☐
☑	23	3	64-QAM				405	450	☐
☐	24	4	BPSK				54	60	☐
☐	25	4	QPSK				108	120	☐
☐	26	4	QPSK				162	180	☐
☐	27	4	16-QAM				216	240	☐
☐	28	4	16-QAM				324	360	☐
☐	29	4	64-QAM				432	480	☐
☐	30	4	64-QAM				486	540	☐
☐	31	4	64-QAM				540	600	☐
☑	32	1	BPSK	-	-	-	6.0	6.7	☐
☑	33	2	16-QAM	QPSK	-	-	81	90.0	☐
☑	34	2	64-QAM	QPSK	-	-	108	120	☐
☑	35	2	64-QAM	16-QAM	-	-	135	150	☐
☑	36	2	16-QAM	QPSK	-	-	121.5	135	☐
☑	37	2	64-QAM	QPSK	-	-	162	180	☐
☑	38	2	64-QAM	16-QAM	-	-	202.5	225	☐
☑	39	3	16-QAM	QPSK	QPSK	-	108	120	☑
☑	40	3	16-QAM	16-QAM	QPSK	-	135	150	☐
☑	41	3	64-QAM	QPSK	QPSK	-	135	150	☐
☑	42	3	64-QAM	16-QAM	QPSK	-	162	180	☐
☑	43	3	64-QAM	16-QAM	16-QAM	-	189	210	☐
☑	44	3	64-QAM	64-QAM	QPSK	-	189	210	☐
☑	45	3	64-QAM	64-QAM	16-QAM	-	216	240	☐
☑	46	3	16-QAM	QPSK	QPSK	-	162	180	☐
☑	47	3	16-QAM	16-QAM	QPSK	-	202.5	225	☐
☑	48	3	64-QAM	QPSK	QPSK	-	202.5	225	☐
☑	49	3	64-QAM	16-QAM	QPSK	-	243	270	☐
☑	50	3	64-QAM	16-QAM	16-QAM	-	283.5	315	☐
☑	51	3	64-QAM	64-QAM	QPSK	-	283.5	315	☐
☑	52	3	64-QAM	64-QAM	16-QAM	-	324	360	☐
☐	53	4	16-QAM	QPSK	QPSK	QPSK	135	150	☐
☐	54	4	16-QAM	16-QAM	QPSK	QPSK	162	180	☐
☐	55	4	16-QAM	16-QAM	16-QAM	QPSK	189	210	☐
☐	56	4	64-QAM	QPSK	QPSK	QPSK	162	180	☐
☐	57	4	64-QAM	16-QAM	QPSK	QPSK	189	210	☐
☐	58	4	64-QAM	16-QAM	16-QAM	QPSK	216	240	☐
☐	59	4	64-QAM	16-QAM	16-QAM	16-QAM	243	270	☐
☐	60	4	64-QAM	QPSK	QPSK	QPSK	216	240	☐
☐	61	4	64-QAM	16-QAM	16-QAM	QPSK	243	270	☐
☐	62	4	64-QAM	16-QAM	16-QAM	16-QAM	270	300	☐
☐	63	4	64-QAM	64-QAM	64-QAM	QPSK	270	300	☐
☐	64	4	64-QAM	64-QAM	64-QAM	16-QAM	297	330	☐
☐	65	4	16-QAM	QPSK	QPSK	QPSK	202.5	225	☐
☐	66	4	16-QAM	16-QAM	QPSK	QPSK	243	270	☐
☐	67	4	16-QAM	16-QAM	16-QAM	QPSK	283.5	315	☐
☐	68	4	64-QAM	QPSK	QPSK	QPSK	243	270	☐
☐	69	4	64-QAM	16-QAM	QPSK	QPSK	283.5	315	☐
☐	70	4	64-QAM	16-QAM	16-QAM	QPSK	324	360	☐
☐	71	4	64-QAM	16-QAM	16-QAM	16-QAM	364.5	405	☐
☐	72	4	64-QAM	64-QAM	QPSK	QPSK	324	360	☐
☐	73	4	64-QAM	64-QAM	16-QAM	QPSK	364.5	405	☐
☐	74	4	64-QAM	64-QAM	16-QAM	16-QAM	405	450	☐
☐	75	4	64-QAM	64-QAM	64-QAM	QPSK	405	450	☐
☐	76	4	64-QAM	64-QAM	64-QAM	16-QAM	445.5	495	☐

DATA RATE: 802.11ac VHT20							
Available for EUT	MCS Index	Nbr of spatial streams	Modulation (Stream 1/2/3/4)	Coding rate	GI = 800ns	GI = 400ns	Worst Case Modulation
☑	0	1	BPSK	1/2	6,5	7,2	☐
☑	1	1	QPSK	1/2	13	14,4	☐
☑	2	1	QPSK	3/4	19,5	21,7	☐
☑	3	1	16-QAM	1/2	26	28,9	☐
☑	4	1	16-QAM	3/4	39	43,3	☐
☑	5	1	64-QAM	2/3	52	57,8	☐
☑	6	1	64-QAM	3/4	58,5	65	☐
☑	7	1	64-QAM	5/6	65	72,2	☐
☑	8	1	256-QAM	3/4	78	86,7	☐
☑	9	1	256-QAM	5/6	N/A	N/A	☐
☑	10	2	BPSK	1/2	13	14,4	☐
☑	11	2	QPSK	1/2	26	28,8	☐
☑	12	2	QPSK	3/4	39	43,4	☐
☑	13	2	16-QAM	1/2	52	57,8	☐
☑	14	2	16-QAM	3/4	78	86,6	☐
☑	15	2	64-QAM	2/3	104	115,6	☐
☑	16	2	64-QAM	3/4	117	130	☐
☑	17	2	64-QAM	5/6	130	144,4	☐
☑	18	2	256-QAM	3/4	156	173,4	☐
☑	19	2	256-QAM	5/6	N/A	N/A	☐
☑	20	3	BPSK	1/2	19,5	21,6	☑
☑	21	3	QPSK	1/2	39	43,2	☐
☑	22	3	QPSK	3/4	58,5	65,1	☐
☑	23	3	16-QAM	1/2	78	86,7	☐
☑	24	3	16-QAM	3/4	117	129,9	☐
☑	25	3	64-QAM	2/3	156	173,4	☐
☑	26	3	64-QAM	3/4	175,5	195	☐
☑	27	3	64-QAM	5/6	195	216,6	☐
☑	28	3	256-QAM	3/4	234	260,1	☐
☑	29	3	256-QAM	5/6	N/A	N/A	☐
☐	30	4	BPSK	1/2	26	28,8	☐
☐	31	4	QPSK	1/2	52	57,6	☐
☐	32	4	QPSK	3/4	78	86,8	☐
☐	33	4	16-QAM	1/2	104	115,6	☐
☐	34	4	16-QAM	3/4	156	173,2	☐
☐	35	4	64-QAM	2/3	208	231,2	☐
☐	36	4	64-QAM	3/4	234	260	☐
☐	37	4	64-QAM	5/6	260	288,8	☐
☐	38	4	256-QAM	3/4	312	346,8	☐
☐	39	4	256-QAM	5/6	N/A	N/A	☐
☐	40	5	BPSK	1/2	32,5	36	☐
☐	41	5	QPSK	1/2	65	72	☐
☐	42	5	QPSK	3/4	97,5	108,5	☐
☐	43	5	16-QAM	1/2	130	144,5	☐
☐	44	5	16-QAM	3/4	195	216,5	☐
☐	45	5	64-QAM	2/3	260	289	☐
☐	46	5	64-QAM	3/4	292,5	325	☐
☐	47	5	64-QAM	5/6	325	361	☐
☐	48	5	256-QAM	3/4	390	433,5	☐
☐	49	5	256-QAM	5/6	N/A	N/A	☐
☐	50	6	BPSK	1/2	39	43,2	☐
☐	51	6	QPSK	1/2	78	86,4	☐
☐	52	6	QPSK	3/4	117	130,2	☐
☐	53	6	16-QAM	1/2	156	173,4	☐
☐	54	6	16-QAM	3/4	234	259,8	☐
☐	55	6	64-QAM	2/3	312	346,8	☐
☐	56	6	64-QAM	3/4	351	390	☐
☐	57	6	64-QAM	5/6	390	433,2	☐
☐	58	6	256-QAM	3/4	468	520,2	☐
☐	59	6	256-QAM	5/6	N/A	N/A	☐
☐	60	7	BPSK	1/2	45,5	50,4	☐
☐	61	7	QPSK	1/2	91	100,8	☐
☐	62	7	QPSK	3/4	136,5	151,9	☐
☐	63	7	16-QAM	1/2	182	202,3	☐
☐	64	7	16-QAM	3/4	273	303,1	☐
☐	65	7	64-QAM	2/3	364	404,6	☐
☐	66	7	64-QAM	3/4	409,5	455	☐
☐	67	7	64-QAM	5/6	455	505,4	☐
☐	68	7	256-QAM	3/4	546	606,9	☐
☐	69	7	256-QAM	5/6	N/A	N/A	☐
☐	70	8	BPSK	1/2	52	57,6	☐
☐	71	8	QPSK	1/2	104	115,2	☐
☐	72	8	QPSK	3/4	156	173,6	☐
☐	73	8	16-QAM	1/2	208	231,2	☐
☐	74	8	16-QAM	3/4	312	346,4	☐
☐	75	8	64-QAM	2/3	416	462,4	☐
☐	76	8	64-QAM	3/4	468	520	☐
☐	77	8	64-QAM	5/6	520	577,6	☐
☐	78	8	256-QAM	3/4	624	693,6	☐
☐	79	8	256-QAM	5/6	N/A	N/A	☐

DATA RATE: 802.11ac VHT40							
Available for EUT	MCS Index	Nbr of spatial streams	Modulation (Stream 1/2/3/4)	Coding rate	GI = 800ns	GI = 400ns	Worst Case Modulation
☑	0	1	BPSK	1/2	13,5	15	☐
☑	1	1	QPSK	1/2	27	30	☐
☑	2	1	QPSK	3/4	40,5	45	☐
☑	3	1	16-QAM	1/2	54	60	☐
☑	4	1	16-QAM	3/4	81	90	☐
☑	5	1	64-QAM	2/3	108	120	☐
☑	6	1	64-QAM	3/4	121,5	135	☐
☑	7	1	64-QAM	5/6	135	150	☐
☑	8	1	256-QAM	3/4	162	180	☐
☑	9	1	256-QAM	5/6	180	200	☐
☑	10	2	BPSK	1/2	27	30	☐
☑	11	2	QPSK	1/2	54	60	☐
☑	12	2	QPSK	3/4	81	90	☐
☑	13	2	16-QAM	1/2	108	120	☐
☑	14	2	16-QAM	3/4	162	180	☐
☑	15	2	64-QAM	2/3	216	240	☐
☑	16	2	64-QAM	3/4	243	270	☐
☑	17	2	64-QAM	5/6	270	300	☐
☑	18	2	256-QAM	3/4	324	360	☐
☑	19	2	256-QAM	5/6	360	400	☐
☑	20	3	BPSK	1/2	40,5	45	☐
☑	21	3	QPSK	1/2	81	90	☐
☑	22	3	QPSK	3/4	121,5	135	☐
☑	23	3	16-QAM	1/2	162	180	☐
☑	24	3	16-QAM	3/4	243	270	☐
☑	25	3	64-QAM	2/3	324	360	☐
☑	26	3	64-QAM	3/4	364,5	405	☐
☑	27	3	64-QAM	5/6	405	450	☐
☑	28	3	256-QAM	3/4	486	540	☐
☑	29	3	256-QAM	5/6	540	600	☐
☐	30	4	BPSK	1/2	54	60	☐
☐	31	4	QPSK	1/2	108	120	☐
☐	32	4	QPSK	3/4	162	180	☐
☐	33	4	16-QAM	1/2	216	240	☐
☐	34	4	16-QAM	3/4	324	360	☐
☐	35	4	64-QAM	2/3	432	480	☐
☐	36	4	64-QAM	3/4	486	540	☐
☐	37	4	64-QAM	5/6	540	600	☐
☐	38	4	256-QAM	3/4	648	720	☐
☐	39	4	256-QAM	5/6	720	800	☐
☐	40	5	BPSK	1/2	67,5	75	☐
☐	41	5	QPSK	1/2	135	150	☐
☐	42	5	QPSK	3/4	202,5	225	☐
☐	43	5	16-QAM	1/2	270	300	☐
☐	44	5	16-QAM	3/4	405	450	☐
☐	45	5	64-QAM	2/3	540	600	☐
☐	46	5	64-QAM	3/4	607,5	675	☐
☐	47	5	64-QAM	5/6	675	750	☐
☐	48	5	256-QAM	3/4	810	900	☐
☐	49	5	256-QAM	5/6	900	1000	☐
☐	50	6	BPSK	1/2	81	90	☐
☐	51	6	QPSK	1/2	162	180	☐
☐	52	6	QPSK	3/4	243	270	☐
☐	53	6	16-QAM	1/2	324	360	☐
☐	54	6	16-QAM	3/4	486	540	☐
☐	55	6	64-QAM	2/3	648	720	☐
☐	56	6	64-QAM	3/4	729	810	☐
☐	57	6	64-QAM	5/6	810	900	☐
☐	58	6	256-QAM	3/4	972	1080	☐
☐	59	6	256-QAM	5/6	1080	1200	☐
☐	60	7	BPSK	1/2	94,5	105	☐
☐	61	7	QPSK	1/2	189	210	☐
☐	62	7	QPSK	3/4	283,5	315	☐
☐	63	7	16-QAM	1/2	378	420	☐
☐	64	7	16-QAM	3/4	567	630	☐
☐	65	7	64-QAM	2/3	756	840	☐
☐	66	7	64-QAM	3/4	850,5	945	☐
☐	67	7	64-QAM	5/6	945	1050	☐
☐	68	7	256-QAM	3/4	1134	1260	☐
☐	69	7	256-QAM	5/6	1260	1400	☐
☐	70	8	BPSK	1/2	108	120	☐
☐	71	8	QPSK	1/2	216	240	☐
☐	72	8	QPSK	3/4	324	360	☐
☐	73	8	16-QAM	1/2	432	480	☐
☐	74	8	16-QAM	3/4	648	720	☐
☐	75	8	64-QAM	2/3	864	960	☐
☐	76	8	64-QAM	3/4	972	1080	☐
☐	77	8	64-QAM	5/6	1080	1200	☐
☐	78	8	256-QAM	3/4	1296	1440	☐
☐	79	8	256-QAM	5/6	1440	1600	☐

DATA RATE: 802.11ac VHT80							
Available for EUT	MCS Index	Nbr of spatial streams	Modulation (Stream 1/2/3/4)	Coding rate	GI = 800ns	GI = 400ns	Worst Case Modulation
☑	0	1	BPSK	1/2	29.3	32.5	☐
☑	1	1	QPSK	1/2	58.5	65	☐
☑	2	1	QPSK	3/4	87.8	97.5	☐
☑	3	1	16-QAM	1/2	117	130	☐
☑	4	1	16-QAM	3/4	175.5	195	☐
☑	5	1	64-QAM	2/3	234	260	☐
☑	6	1	64-QAM	3/4	263.3	292.5	☐
☑	7	1	64-QAM	5/6	292.5	325	☐
☑	8	1	256-QAM	3/4	351	390	☐
☑	9	1	256-QAM	5/6	390	433.3	☐
☑	10	2	BPSK	1/2	58.6	65	☐
☑	11	2	QPSK	1/2	117	130	☐
☑	12	2	QPSK	3/4	175.6	195	☐
☑	13	2	16-QAM	1/2	234	260	☐
☑	14	2	16-QAM	3/4	351	390	☐
☑	15	2	64-QAM	2/3	468	520	☐
☑	16	2	64-QAM	3/4	526.6	585	☐
☑	17	2	64-QAM	5/6	585	650	☐
☑	18	2	256-QAM	3/4	702	780	☐
☑	19	2	256-QAM	5/6	780	866.6	☐
☑	20	3	BPSK	1/2	87.9	97.5	☑
☑	21	3	QPSK	1/2	175.5	195	☐
☑	22	3	QPSK	3/4	263.4	292.5	☐
☑	23	3	16-QAM	1/2	351	390	☐
☑	24	3	16-QAM	3/4	526.5	585	☐
☑	25	3	64-QAM	2/3	702	780	☐
☑	26	3	64-QAM	3/4	789.9	877.5	☐
☑	27	3	64-QAM	5/6	877.5	975	☐
☑	28	3	256-QAM	3/4	1053	1170	☐
☑	29	3	256-QAM	5/6	1170	1299.9	☐
☐	30	4	BPSK	1/2	117.2	130	☐
☐	31	4	QPSK	1/2	234	260	☐
☐	32	4	QPSK	3/4	351.2	390	☐
☐	33	4	16-QAM	1/2	468	520	☐
☐	34	4	16-QAM	3/4	702	780	☐
☐	35	4	64-QAM	2/3	936	1040	☐
☐	36	4	64-QAM	3/4	1053.2	1170	☐
☐	37	4	64-QAM	5/6	1170	1300	☐
☐	38	4	256-QAM	3/4	1404	1560	☐
☐	39	4	256-QAM	5/6	1560	1733.2	☐
☐	40	5	BPSK	1/2	146.5	162.5	☐
☐	41	5	QPSK	1/2	292.5	325	☐
☐	42	5	QPSK	3/4	439	487.5	☐
☐	43	5	16-QAM	1/2	585	650	☐
☐	44	5	16-QAM	3/4	877.5	975	☐
☐	45	5	64-QAM	2/3	1170	1300	☐
☐	46	5	64-QAM	3/4	1316.5	1462.5	☐
☐	47	5	64-QAM	5/6	1462.5	1625	☐
☐	48	5	256-QAM	3/4	1755	1950	☐
☐	49	5	256-QAM	5/6	1950	2166.5	☐
☐	50	6	BPSK	1/2	175.8	195	☐
☐	51	6	QPSK	1/2	351	390	☐
☐	52	6	QPSK	3/4	526.8	585	☐
☐	53	6	16-QAM	1/2	702	780	☐
☐	54	6	16-QAM	3/4	1053	1170	☐
☐	55	6	64-QAM	2/3	1404	1560	☐
☐	56	6	64-QAM	3/4	1579.8	1755	☐
☐	57	6	64-QAM	5/6	1755	1950	☐
☐	58	6	256-QAM	3/4	2106	2340	☐
☐	59	6	256-QAM	5/6	2340	2599.8	☐
☐	60	7	BPSK	1/2	205.1	227.5	☐
☐	61	7	QPSK	1/2	409.5	455	☐
☐	62	7	QPSK	3/4	614.6	682.5	☐
☐	63	7	16-QAM	1/2	819	910	☐
☐	64	7	16-QAM	3/4	1228.5	1365	☐
☐	65	7	64-QAM	2/3	1638	1820	☐
☐	66	7	64-QAM	3/4	1843.1	2047.5	☐
☐	67	7	64-QAM	5/6	2047.5	2275	☐
☐	68	7	256-QAM	3/4	2457	2730	☐
☐	69	7	256-QAM	5/6	2730	3033.1	☐
☐	70	8	BPSK	1/2	234.4	260	☐
☐	71	8	QPSK	1/2	468	520	☐
☐	72	8	QPSK	3/4	702.4	780	☐
☐	73	8	16-QAM	1/2	936	1040	☐
☐	74	8	16-QAM	3/4	1404	1560	☐
☐	75	8	64-QAM	2/3	1872	2080	☐
☐	76	8	64-QAM	3/4	2106.4	2340	☐
☐	77	8	64-QAM	5/6	2340	2600	☐
☐	78	8	256-QAM	3/4	2808	3120	☐
☐	79	8	256-QAM	5/6	3120	3466.4	☐

Test report reference: N°153607-716366A

802.11a	
Channel	C7
EIRP TPC Max (dBm)	18.9
Occupied Bandwidth (MHz)	16,68

802.11n HT20/ac VHT20	
Channel	C7
EIRP TPC Max (dBm)	19.8
Occupied Bandwidth (MHz)	17,86

802.11n HT40/ac VHT40	
Channel	C18
EIRP TPC Max (dBm)	18.3
Occupied Bandwidth (MHz)	36,73

802.11ac VHT80	
Channel	C26
EIRP TPC Max (dBm)	14.0
Occupied Bandwidth (MHz)	76,74

2.2. RUNNING MODE

The EUT is set in the following modes during tests:
- Emission-reception with a duty cycle above 17% in the data rate that produced the highest output power

Following commands with the specific test software “TERATERM” are used to set the product:

- See document “Procédure DFS Fast5260_2018V2.docx” for the command used during test

-System testings is performed with iperf test software in udp mode from the Master Device to the Client Device on the test channel. The data traffic is performed Laptop 2 to Laptop 1

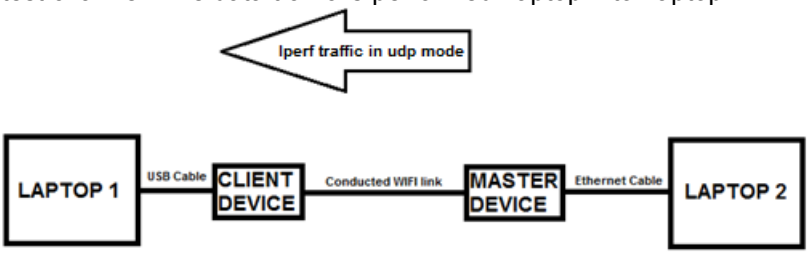

- System testing is performed with the designed MPEG test file (http://ntiacsd.ntia.doc.gov/dfs/) that streams full motion video at 30 frames per second for channel loading from the Master Device to the Client Device on the test channel. This MPEG file is played via 2 laptops as follow:

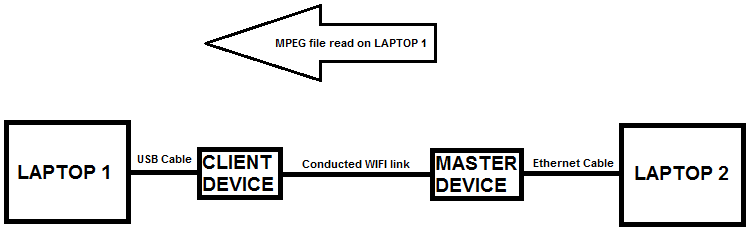

2.3. EQUIPMENT LABELLING

2.4. EQUIPMENT MODIFICATION

☑ None ☐ Modification:

3. DFS DETECTION THRESHOLDS DETERMINATION, REFERENCE NOISE LEVEL & CHANNEL LOADING

3.1. TEST CONDITIONS

Test performed by : Armand MAHOUNGOU
Date of test : November 13, 2018 to December 20, 2018
Ambient temperature : 27 °C & 25 °C
Relative humidity : 44 % & 40 %

3.2. TEST SETUP

- The Equipment Under Test is:
☑ On a table
☐ In an anechoic chamber

- Measurement is performed with a spectrum analyzer:
☑ On the EUT conducted access
☐ On the EUT with a test fixture

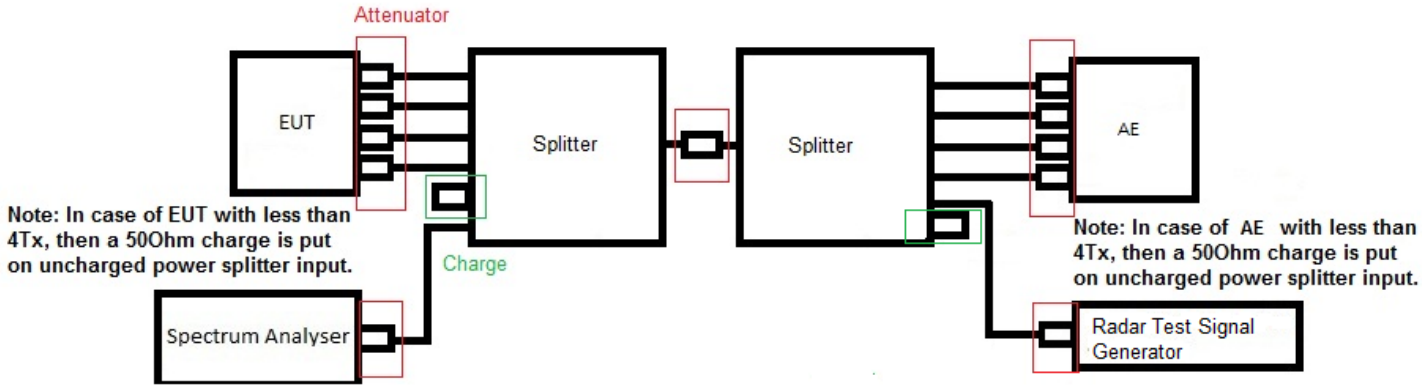

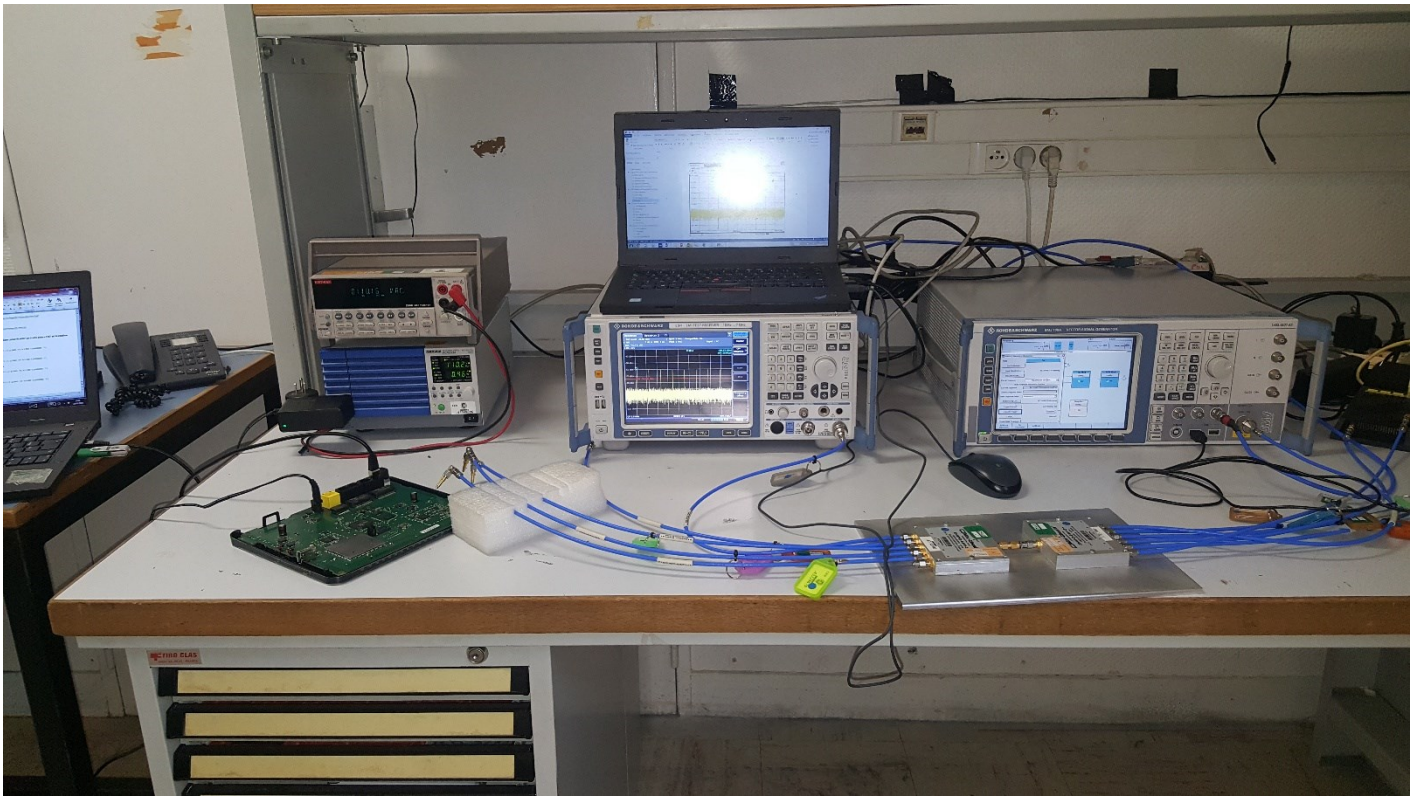

Photograph for DFS Detection Thresholds Determination, Reference Noise Level, Channel Loading

3.3. TEST EQUIPMENT LIST

DESCRIPTION	MANUFACTURER	MODEL	N° LCIE	Cal_Date	Cal_Due
Multi-meter	KEITHLEY	2000	A1241084	2016/05	2018/05
EMI receiver	ROHDE & SCHWARZ	ESR7	A2642026	2017/02	2019/02
RF cable	Télédyne	920-0202-024	A5329663	2018/05	2019/05
RF cable	Télédyne	920-0202-024	A5329664	2018/05	2019/05
RF cable	Télédyne	920-0202-024	A5329665	2018/05	2019/05
RF cable	Télédyne	920-0202-024	A5329668	2018/05	2019/05
RF cable	Télédyne	920-0202-024	A5329669	2018/05	2019/05
RF cable	Télédyne	920-0202-024	A5329670	2018/05	2019/05
RF cable	Télédyne	920-0202-024	A5329672	2018/05	2019/05
RF cable	Télédyne	920-0202-024	A5329673	2018/05	2019/05
Vector signal generator	ROHDE & SCHWARZ	SMJ100A	A5444007	Verified with calibrated EMI receiver/ Spectrum analyzer before testing	
Programmable AC/DC power supply	KIKUSUI	PCR500M	A7040079	Verified with calibrated multimeter before testing	
Attenuator 10dB	MINI CIRCUITS	BW-S10W2+	A7122229	2018/05	2019/05
Attenuator 10dB	MINI CIRCUITS	BW-S10W2+	A7122230	2018/05	2019/05
RF cable & Attenuator 20dB	Télédyne & MINI CIRCUITS	920-0202-024 & FW-20+	A5329661	2018/05	2019/05
RF cable & Attenuator 20dB	Télédyne & MINI CIRCUITS	920-0202-024 & FW-20+	A5329676	2018/05	2019/05
RF cable & Attenuator 20dB	Télédyne & MINI CIRCUITS	920-0202-024 & FW-20+	A5329674	2018/05	2019/05
RF cable & Attenuator 20dB	Télédyne & MINI CIRCUITS	920-0202-024 & FW-20+	A5329675	2018/05	2019/05
Attenuator 3dB	MINI CIRCUITS	BW-S3W2+	A7122238	2018/05	2019/05
Attenuator 3dB	MINI CIRCUITS	BW-S3W2+	A7122239	2018/05	2019/05
Attenuator 3dB	MINI CIRCUITS	BW-S3W2+	A7122240	2018/05	2019/05
Attenuator 3dB	MINI CIRCUITS	BW-S3W2+	A7122241	2018/05	2019/05
Attenuator 3dB	MINI CIRCUITS	BW-S3W2+	A7122242	2018/05	2019/05
Attenuator 3dB	MINI CIRCUITS	BW-S3W2+	A7122243	2018/05	2019/05
Power splitter	Mini-Circuits	ZN6PD-63W-S+	A7132040	2018/05	2019/05
Power splitter	Mini-Circuits	ZN6PD-63W-S+	A7132041	2018/05	2019/05
Load 50 ohms	Fairview Microwave	ST0635F	A7152075	2018/05	2019/05
Load 50 ohms	Fairview Microwave	ST0635F	A7152076	2018/05	2019/05
Load 50 ohms	Fairview Microwave	ST0635F	A7152077	2018/05	2019/05
Load 50 ohms	Fairview Microwave	ST0635F	A7152078	2018/05	2019/05

Note: In our quality system, the test equipment calibration due is more & less 2 months

3.4. RESULTS

DFS Detection Thresholds Calibration	
C7	
Type 0	Type 1
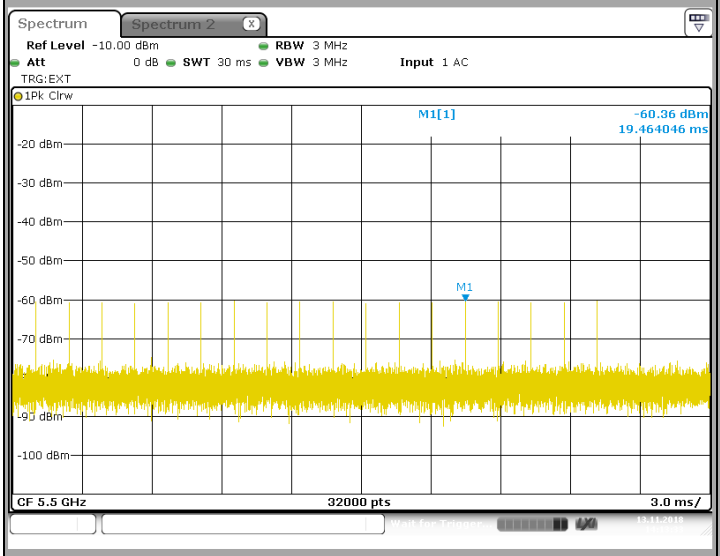	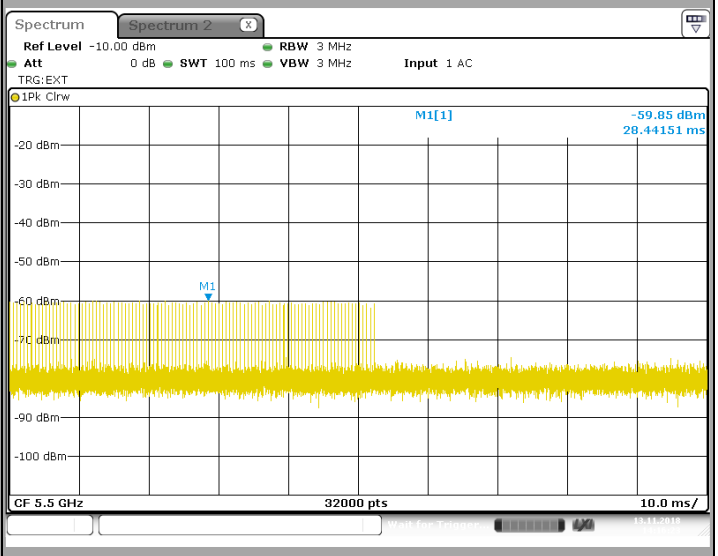
Type 2	Type 3
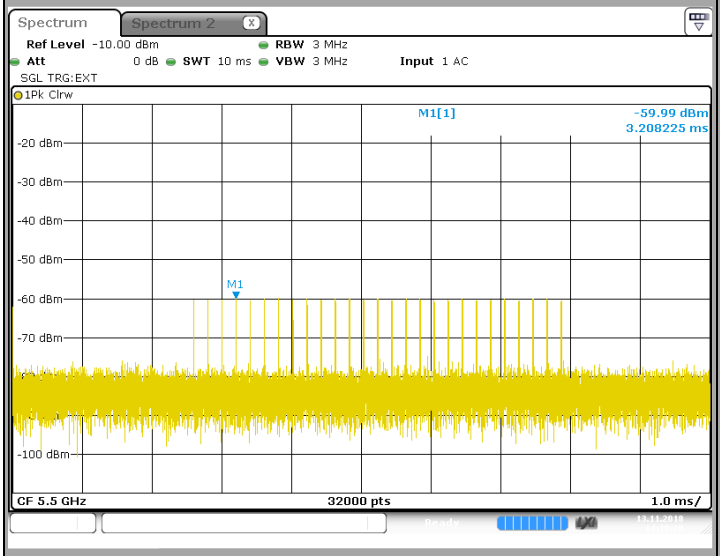	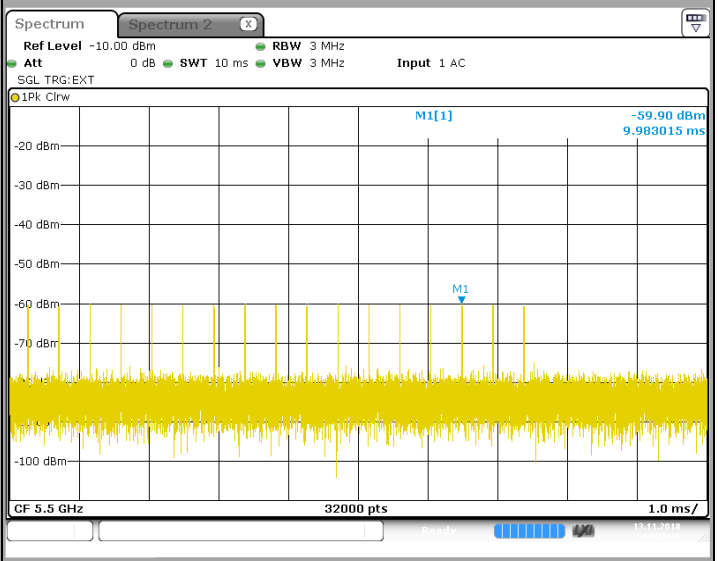

DFS Detection Thresholds Calibration	
Channel	
Type 4	Type 5
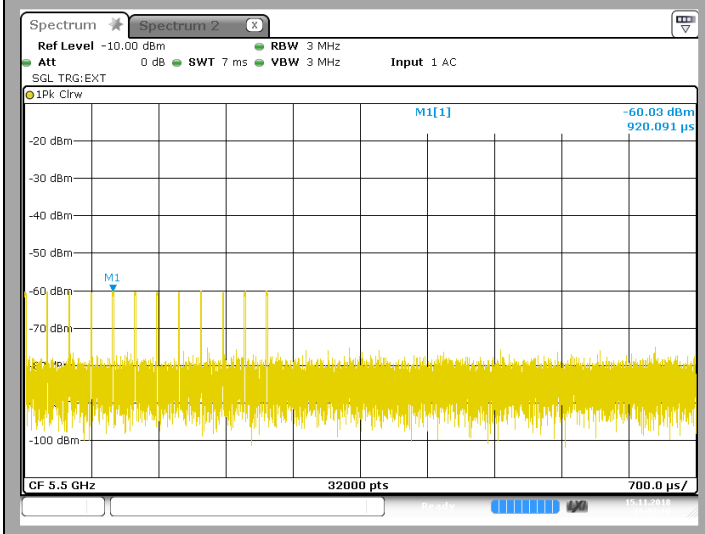	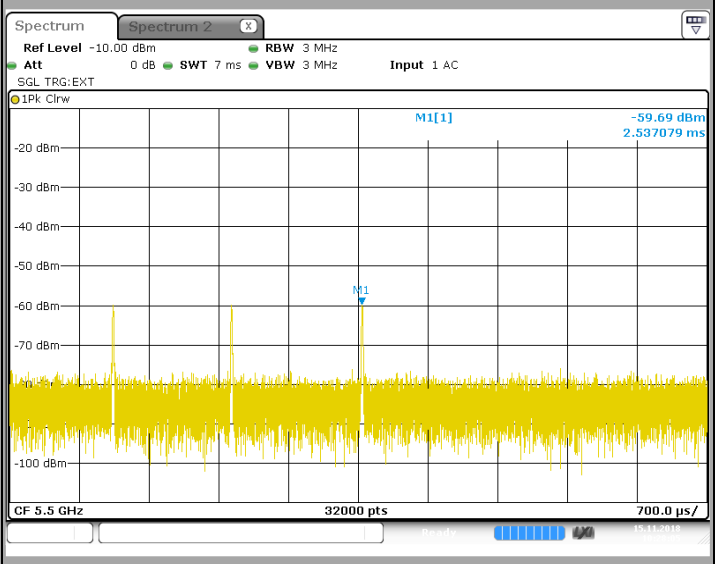
Type 6	
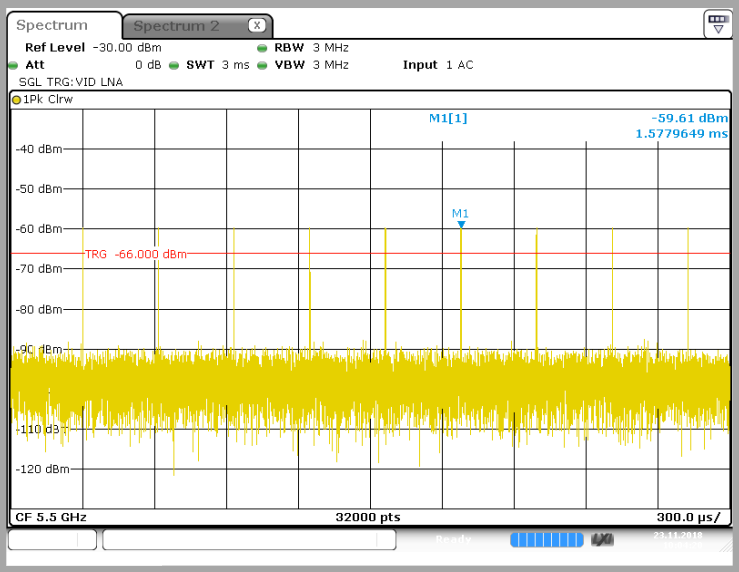	

Channel	**Channel**
Applicable Level (dBm)	-64
Lowest Antenna Gain (dBi)	3,7
DFS Detection Thresholds (dBm)	-60,3
Additional Level (dB)	1
Radar Level (dBm)	-59,3

Channel	**Channel**
EIRP (See test report from FCC ID: RRK2012060056-1)	338,065mW
DFS Detection thresholds applied	-64dBm
Additional Level (dB)	1
DFS Detection thresholds applied	-63dBm

Reference Noise Level
C7

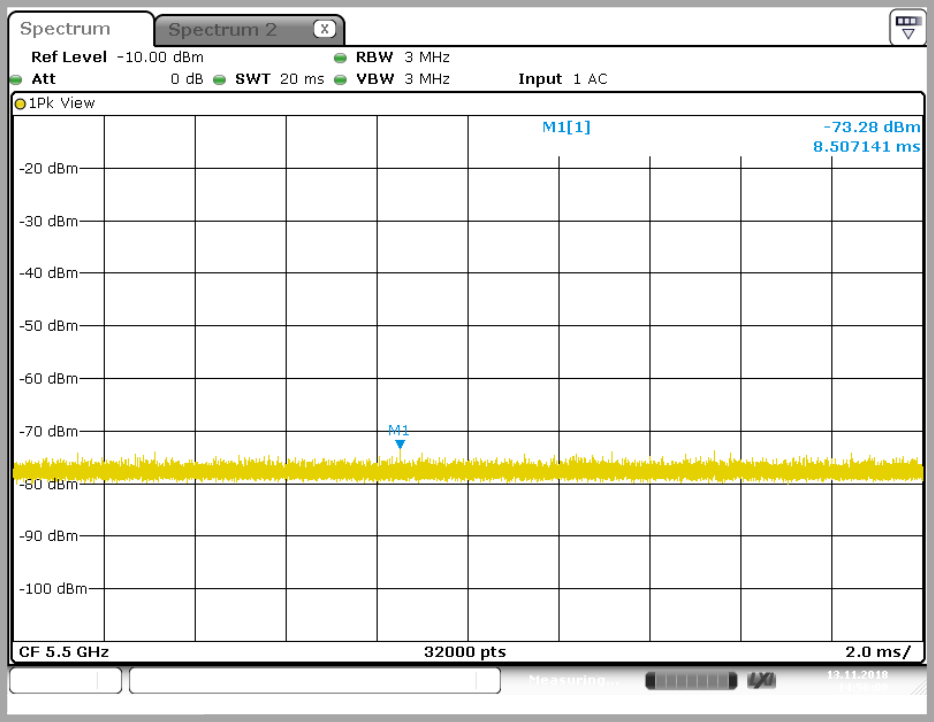

Master Traffic	
802.11a	**802.11n HT20**
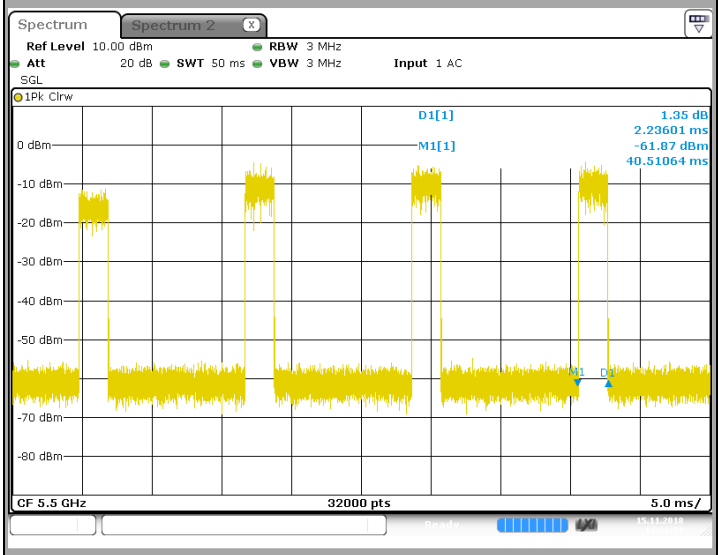	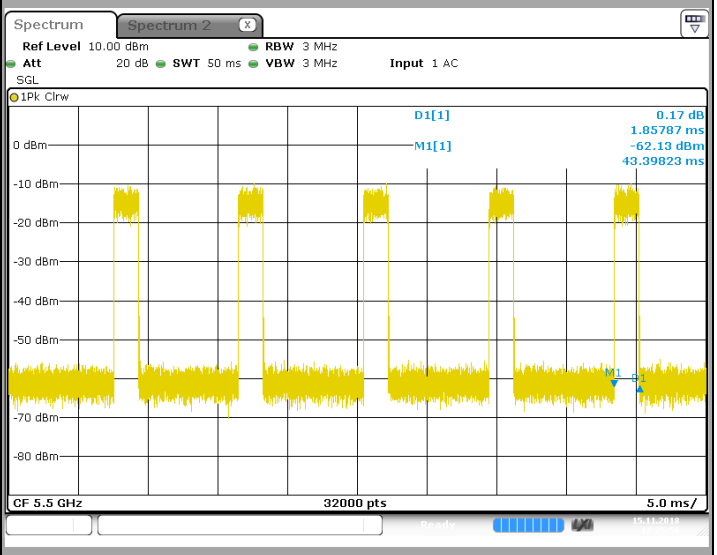
802.11n HT40	**802.11ac VHT80**
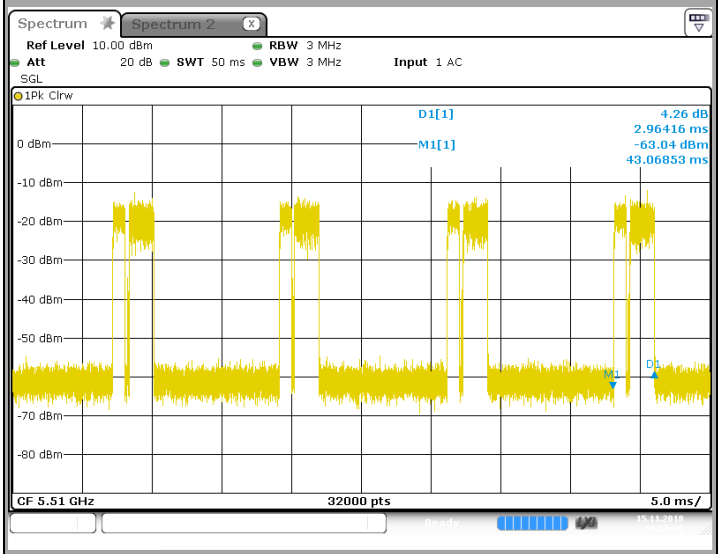	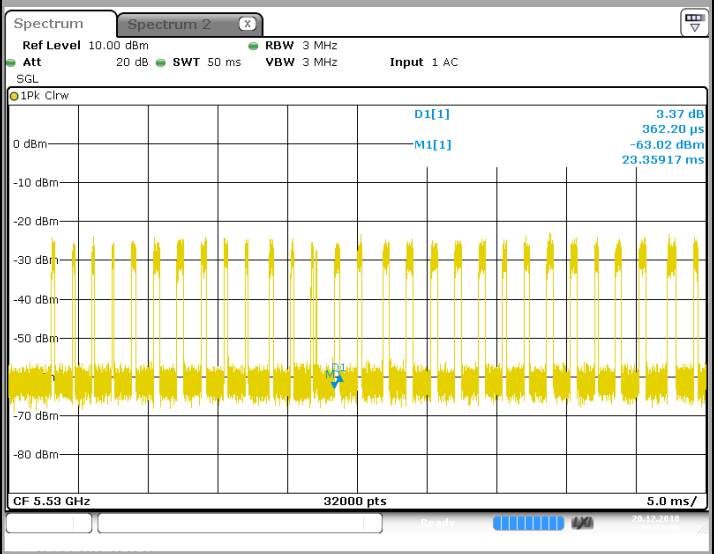
Duty Cycle (%)	Over 17%

4. DYNAMIC FREQUENCY SELECTION (DFS): CHANNEL AVAILABILITY CHECK & DFS DETECTION THRESHOLD

4.1. TEST CONDITIONS

Test performed by : Armand MAHOUNGOU
Date of test : November 13, 2018 to December 20, 2018
Ambient temperature : 27 °C & 25 °C
Relative humidity : 44 % & 40 %

4.2. TEST SETUP

- The Equipment Under Test is:
☑ On a table
☐ In an anechoic chamber

- Measurement is performed with a spectrum analyzer:
☑ On the EUT conducted access
☐ On the EUT with a test fixture

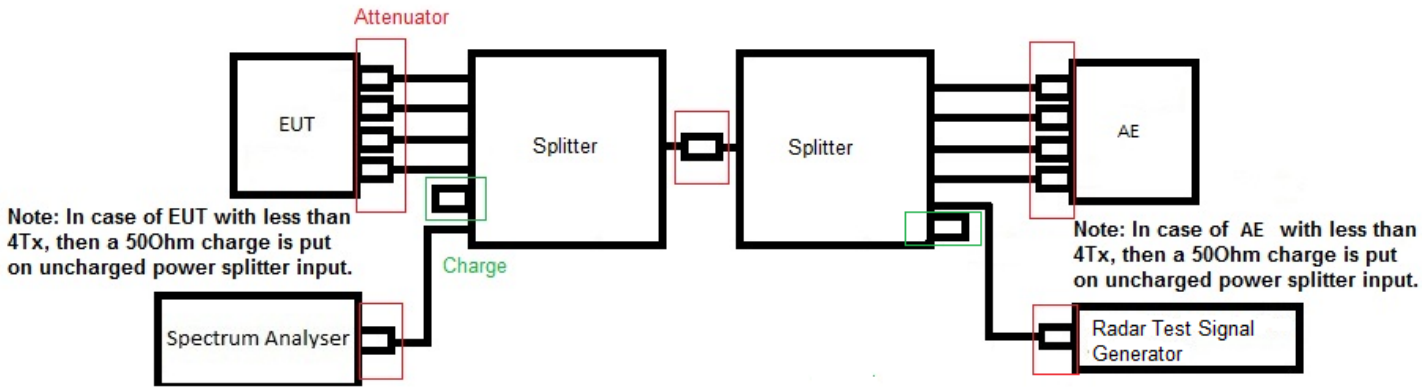

Photograph for Channel Availability Check Time & DFS Detection Threshold

4.3. LIMIT

Channel Availability Check Time shall exceed 60 seconds
Radard burst must be detected at the start & the end of Channel Availability Check Time

4.4. TEST EQUIPMENT LIST

DESCRIPTION	MANUFACTURER	MODEL	N° LCIE	Cal_Date	Cal_Due
Multi-meter	KEITHLEY	2000	A1242090	2018/05	2020/05
EMI receiver	ROHDE & SCHWARZ	ESR 7	A2642026	2017/02	2019/02
RF cable	Télédyne	920-0202-024	A5329663	2018/05	2020/05
RF cable	Télédyne	920-0202-024	A5329664	2018/05	2020/05
RF cable	Télédyne	920-0202-024	A5329665	2018/05	2020/05
RF cable	Télédyne	920-0202-024	A5329668	2018/05	2020/05
RF cable	Télédyne	920-0202-024	A5329669	2018/05	2020/05
RF cable	Télédyne	920-0202-024	A5329670	2018/05	2020/05
RF cable	Télédyne	920-0202-024	A5329672	2018/05	2020/05
RF cable	Télédyne	920-0202-024	A5329673	2018/05	2020/05
Vector signal generator	ROHDE & SCHWARZ	SMJ100A	A5444007	Verified with calibrated EMI receiver/ Spectrum analyzer before testing	
Programmable AC/DC power supply	KIKUSUI	PCR500M	A7040079	Verified with calibrated multimeter before testing	
Attenuator 10dB	MINI CIRCUITS	BW-S10W2+	A7122229	2018/05	2020/05
Attenuator 10dB	MINI CIRCUITS	BW-S10W2+	A7122230	2018/05	2020/05
RF cable & Attenuator 20dB	Télédyne & MINI CIRCUITS	920-0202-024 & FW-20+	A5329661	2018/05	2020/05
RF cable & Attenuator 20dB	Télédyne & MINI CIRCUITS	920-0202-024 & FW-20+	A5329676	2018/05	2020/05
RF cable & Attenuator 20dB	Télédyne & MINI CIRCUITS	920-0202-024 & FW-20+	A5329674	2018/05	2020/05
RF cable & Attenuator 20dB	Télédyne & MINI CIRCUITS	920-0202-024 & FW-20+	A5329675	2018/05	2020/05
Attenuator 3dB	MINI CIRCUITS	BW-S3W2+	A7122238	2018/05	2020/05
Attenuator 3dB	MINI CIRCUITS	BW-S3W2+	A7122239	2018/05	2020/05
Attenuator 3dB	MINI CIRCUITS	BW-S3W2+	A7122240	2018/05	2020/05
Attenuator 3dB	MINI CIRCUITS	BW-S3W2+	A7122241	2018/05	2020/05
Attenuator 3dB	MINI CIRCUITS	BW-S3W2+	A7122242	2018/05	2020/05
Attenuator 3dB	MINI CIRCUITS	BW-S3W2+	A7122243	2018/05	2020/05
Power splitter	Mini-Circuits	ZN6PD-63W-S+	A7132040	2018/05	2020/05
Power splitter	Mini-Circuits	ZN6PD-63W-S+	A7132041	2018/05	2020/05
Load 50 ohms	Fairview Microwave	ST0635F	A7152075	2018/05	2020/05
Load 50 ohms	Fairview Microwave	ST0635F	A7152076	2018/05	2020/05
Load 50 ohms	Fairview Microwave	ST0635F	A7152077	2018/05	2020/05
Load 50 ohms	Fairview Microwave	ST0635F	A7152078	2018/05	2020/05

Note: In our quality system, the test equipment calibration due is more & less 2 months

4.5. DIVERGENCE, ADDITION OR SUPPRESSION ON THE TEST SPECIFICATION

☑ None ☐ Divergence:

4.6. RESULTS

Channel Availability Check	
802.11a	
C7	
Channel Availability Check Time	Radar Type 0 at the beginning of the Channel Availability Check Time
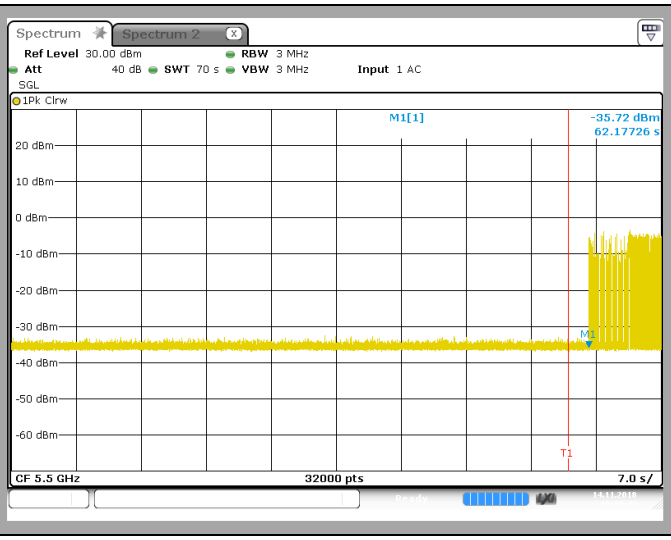	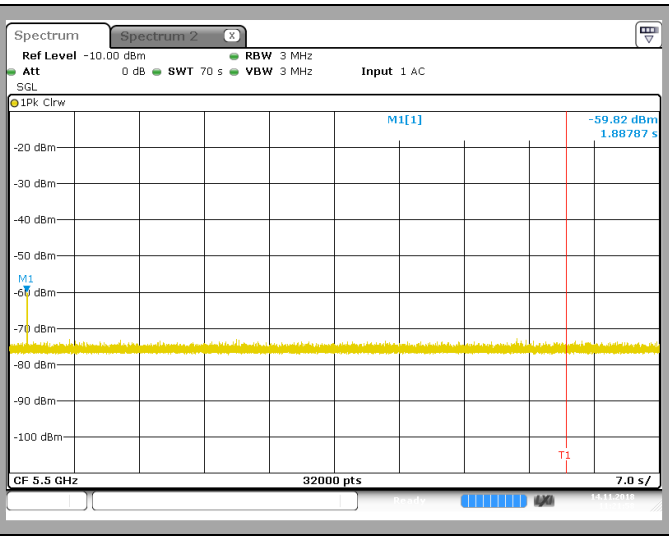
Radar Type 0 at the end of the Channel Availability Check Time	
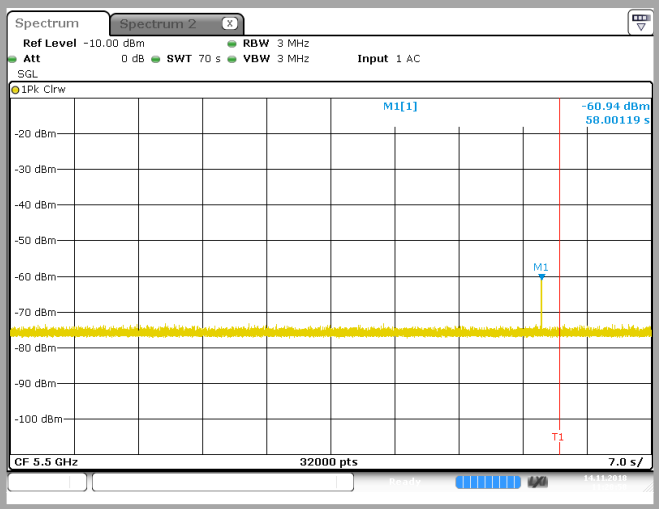	

Channel Availability Check Time (s)	62.177	
Radar burst Type 0 at the beginning of Channel Availability Check time detected & no transmission from the EUT on the tested channel	☑Yes	☐No
Radar burst Type 0 at the end of Channel Availability Check time detected & no transmission from the EUT on the tested channel	☑Yes	☐No

4.7. CONCLUSION

Channel Availability Check Time & DFS Detection Threshold measurement performed on the sample of the product **SAGEMCOM FAST 5260**, SN: **NQ1736013023187**, in configuration and description presented in this test report, show levels **compliant** to the **47 CFR PART 15.407 & RSS 247 ISSUE 2** limits.

5. DYNAMIC FREQUENCY SELECTION (DFS): U-NII DETECTION BANDWIDTH

5.1. TEST CONDITIONS

Test performed by : Armand MAHOUNGOU
Date of test : November 13, 2018 to December 20, 2018
Ambient temperature : 27 °C & 25 °C
Relative humidity : 44 % & 40 %

5.2. TEST SETUP

- The Equipment Under Test is:
☑ On a table
☐ In an anechoic chamber

- Measurement is performed with a spectrum analyzer:
☑ On the EUT conducted access
☐ On the EUT with a test fixture

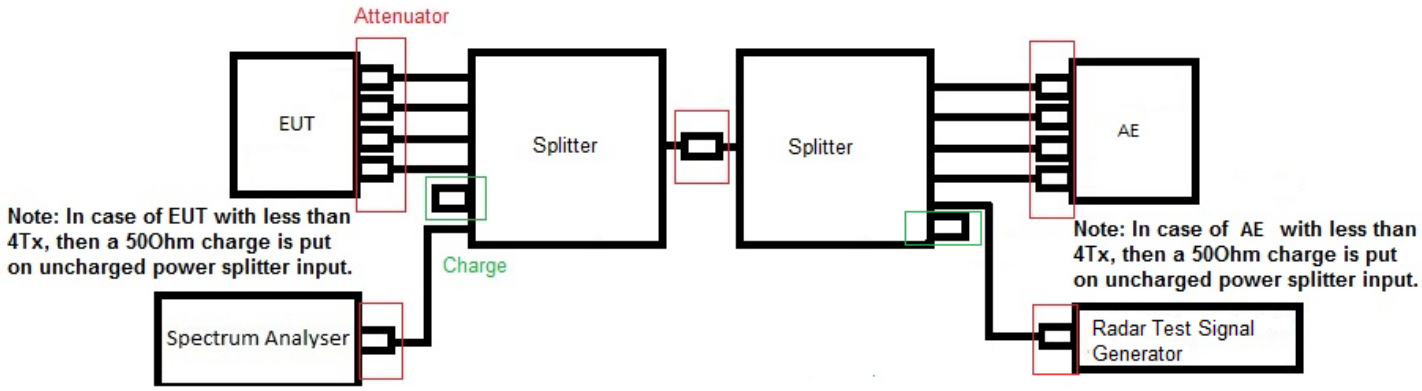

Photograph for U-NII Detection Bandwidth

5.3. LIMIT

Minimum 100% of the U-NII 99% transmission power bandwidth

5.4. TEST EQUIPMENT LIST

DESCRIPTION	MANUFACTURER	MODEL	N° LCIE	Cal_Date	Cal_Due
Multi-meter	KEITHLEY	2000	A1242090	2018/05	2020/05
EMI receiver	ROHDE & SCHWARZ	ESR 7	A2642026	2017/02	2019/02
RF cable	Télédyne	920-0202-024	A5329663	2018/05	2020/05
RF cable	Télédyne	920-0202-024	A5329664	2018/05	2020/05
RF cable	Télédyne	920-0202-024	A5329665	2018/05	2020/05
RF cable	Télédyne	920-0202-024	A5329668	2018/05	2020/05
RF cable	Télédyne	920-0202-024	A5329669	2018/05	2020/05
RF cable	Télédyne	920-0202-024	A5329670	2018/05	2020/05
RF cable	Télédyne	920-0202-024	A5329672	2018/05	2020/05
RF cable	Télédyne	920-0202-024	A5329673	2018/05	2020/05
Vector signal generator	ROHDE & SCHWARZ	SMJ100A	A5444007	Verified with calibrated EMI receiver/ Spectrum analyzer before testing	
Programmable AC/DC power supply	KIKUSUI	PCR500M	A7040079	Verified with calibrated multimeter before testing	
Attenuator 10dB	MINI CIRCUITS	BW-S10W2+	A7122229	2018/05	2020/05
Attenuator 10dB	MINI CIRCUITS	BW-S10W2+	A7122230	2018/05	2020/05
RF cable & Attenuator 20dB	Télédyne & MINI CIRCUITS	920-0202-024 & FW-20+	A5329661	2018/05	2020/05
RF cable & Attenuator 20dB	Télédyne & MINI CIRCUITS	920-0202-024 & FW-20+	A5329676	2018/05	2020/05
RF cable & Attenuator 20dB	Télédyne & MINI CIRCUITS	920-0202-024 & FW-20+	A5329674	2018/05	2020/05
RF cable & Attenuator 20dB	Télédyne & MINI CIRCUITS	920-0202-024 & FW-20+	A5329675	2018/05	2020/05
Attenuator 3dB	MINI CIRCUITS	BW-S3W2+	A7122238	2018/05	2020/05
Attenuator 3dB	MINI CIRCUITS	BW-S3W2+	A7122239	2018/05	2020/05
Attenuator 3dB	MINI CIRCUITS	BW-S3W2+	A7122240	2018/05	2020/05
Attenuator 3dB	MINI CIRCUITS	BW-S3W2+	A7122241	2018/05	2020/05
Attenuator 3dB	MINI CIRCUITS	BW-S3W2+	A7122242	2018/05	2020/05
Attenuator 3dB	MINI CIRCUITS	BW-S3W2+	A7122243	2018/05	2020/05
Power splitter	Mini-Circuits	ZN6PD-63W-S+	A7132040	2018/05	2020/05
Power splitter	Mini-Circuits	ZN6PD-63W-S+	A7132041	2018/05	2020/05
Load 50 ohms	Fairview Microwave	ST0635F	A7152075	2018/05	2020/05
Load 50 ohms	Fairview Microwave	ST0635F	A7152076	2018/05	2020/05
Load 50 ohms	Fairview Microwave	ST0635F	A7152077	2018/05	2020/05
Load 50 ohms	Fairview Microwave	ST0635F	A7152078	2018/05	2020/05

Note: In our quality system, the test equipment calibration due is more & less 2 months

5.5. DIVERGENCE, ADDITION OR SUPPRESSION ON THE TEST SPECIFICATION

☑ None ☐ Divergence:

5.6. RESULTS

802.11a	
Channel	**Channel**
FL (MHz)	5490
FH (MHz)	5510
U- NII Detection bandwidth (MHz)	20
99% Occupied bandwidth (MHz)	16,92
U- NII Detection Bandwidth (%)	118,2

802.11n HT20	
Channel	**Channel**
FL (MHz)	5490
FH (MHz)	5510
U- NII Detection bandwidth (MHz)	20
99% Occupied bandwidth (MHz)	18,04
U- NII Detection Bandwidth (%)	110,9

Mode	
Channel	**Channel**
FL (MHz)	5490
FH (MHz)	5530
U- NII Detection bandwidth (MHz)	40
99% Occupied bandwidth (MHz)	36,98
U- NII Detection Bandwidth (%)	108,2

802.11ac VHT80	
Channel	**Channel**
FL (MHz)	5490
FH (MHz)	5570
U- NII Detection bandwidth (MHz)	80
99% Occupied bandwidth (MHz)	76,74
U- NII Detection Bandwidth (%)	104,2

5.7. CONCLUSION

U-NII Detection Bandwidth measurement performed on the sample of the product **SAGEMCOM FAST 5260**, SN: **NQ1736013023187**, in configuration and description presented in this test report, show levels **compliant** to the 47 CFR PART 15.407 & RSS 247 ISSUE 2 limits.

6. DYNAMIC FREQUENCY SELECTION (DFS): STATISTICAL PERFORMANCE CHECK

6.1. TEST CONDITIONS

Test performed by : Armand MAHOUNGOU
Date of test : November 13, 2018 to December 20, 2018
Ambient temperature : 27 °C & 25 °C
Relative humidity : 44 % & 40 %

6.2. TEST SETUP

- The Equipment Under Test is:
☑ On a table
☐ In an anechoic chamber

- Measurement is performed with a spectrum analyzer:
☑ On the EUT conducted access
☐ On the EUT with a test fixture

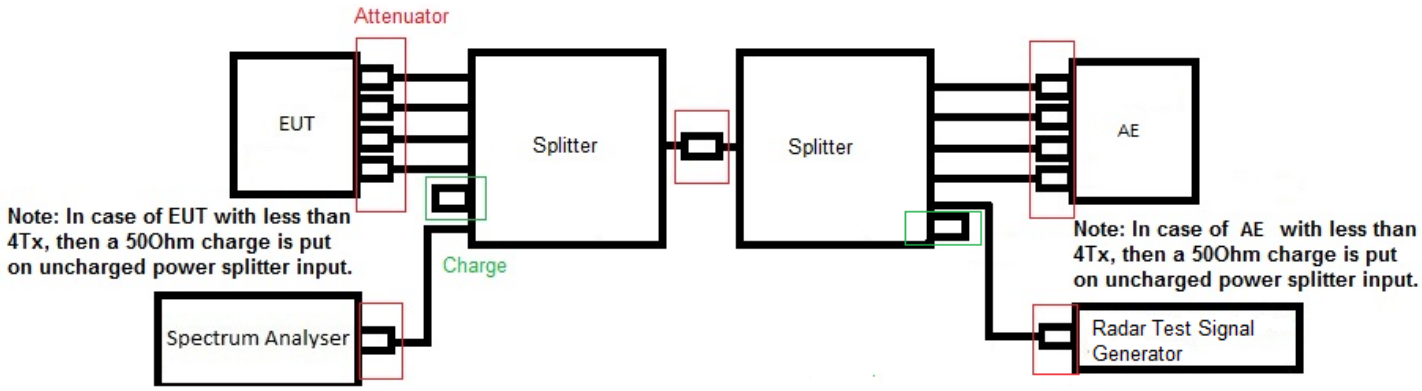

Photograph for Statistical Performance Check

6.3. LIMIT

Short Pulse Radar Test Waveform					
Radar Type	**Pulse Width (µsec)**	**PRI (µsec)**	**Number of Pulses**	**Minimum Percentage of Sucessful Detection**	**Minimum Number of Trials**
1	1	See pulse sequence	(1/360)*(19*10^6/3066)	60%	30
2	1-5	150-230	23-29	60%	30
3	6-10	200-500	16-18	60%	30
4	11-20	200-500	12-16	60%	30
Aggregate Radar Type 1-4 (%)				80%	120

Long Pulse Radar Test Waveform							
Radar Type	**Pulse Width (µsec)**	**Chirp Width (MHz)**	**PRI (µsec)**	**Number of Pulses**	**Number of Bursts**	**Minimum Percentage of Sucessful Detection**	**Minimum Number of Trials**
5	50-100	5-20	1000-2000	1-3	8-20	80%	30

Frequency Hopping Radar Test Waveform							
Radar Type	**Pulse Width (µsec)**	**PRI (µsec)**	**Pulses per Hop**	**Hopping Rate (kHz)**	**Hopping Sequence Length (msec)**	**Minimum Percentage of Sucessful Detection**	**Minimum Number of Trials**
6	1	333	9	0.333	300	70%	30

6.4. TEST EQUIPMENT LIST

DESCRIPTION	MANUFACTURER	MODEL	N° LCIE	Cal_Date	Cal_Due
Multi-meter	KEITHLEY	2000	A1242090	2018/05	2020/05
EMI receiver	ROHDE & SCHWARZ	ESR 7	A2642026	2017/02	2019/02
RF cable	Télédyne	920-0202-024	A5329663	2018/05	2020/05
RF cable	Télédyne	920-0202-024	A5329664	2018/05	2020/05
RF cable	Télédyne	920-0202-024	A5329665	2018/05	2020/05
RF cable	Télédyne	920-0202-024	A5329668	2018/05	2020/05
RF cable	Télédyne	920-0202-024	A5329669	2018/05	2020/05
RF cable	Télédyne	920-0202-024	A5329670	2018/05	2020/05
RF cable	Télédyne	920-0202-024	A5329672	2018/05	2020/05
RF cable	Télédyne	920-0202-024	A5329673	2018/05	2020/05
Vector signal generator	ROHDE & SCHWARZ	SMJ100A	A5444007	Verified with calibrated EMI receiver/ Spectrum analyzer before testing	
Programmable AC/DC power supply	KIKUSUI	PCR500M	A7040079	Verified with calibrated multimeter before testing	
Attenuator 10dB	MINI CIRCUITS	BW-S10W2+	A7122229	2018/05	2020/05
Attenuator 10dB	MINI CIRCUITS	BW-S10W2+	A7122230	2018/05	2020/05
RF cable & Attenuator 20dB	Télédyne & MINI CIRCUITS	920-0202-024 & FW-20+	A5329661	2018/05	2020/05
RF cable & Attenuator 20dB	Télédyne & MINI CIRCUITS	920-0202-024 & FW-20+	A5329676	2018/05	2020/05
RF cable & Attenuator 20dB	Télédyne & MINI CIRCUITS	920-0202-024 & FW-20+	A5329674	2018/05	2020/05
RF cable & Attenuator 20dB	Télédyne & MINI CIRCUITS	920-0202-024 & FW-20+	A5329675	2018/05	2020/05
Attenuator 3dB	MINI CIRCUITS	BW-S3W2+	A7122238	2018/05	2020/05
Attenuator 3dB	MINI CIRCUITS	BW-S3W2+	A7122239	2018/05	2020/05
Attenuator 3dB	MINI CIRCUITS	BW-S3W2+	A7122240	2018/05	2020/05
Attenuator 3dB	MINI CIRCUITS	BW-S3W2+	A7122241	2018/05	2020/05
Attenuator 3dB	MINI CIRCUITS	BW-S3W2+	A7122242	2018/05	2020/05
Attenuator 3dB	MINI CIRCUITS	BW-S3W2+	A7122243	2018/05	2020/05
Power splitter	Mini-Circuits	ZN6PD-63W-S+	A7132040	2018/05	2020/05
Power splitter	Mini-Circuits	ZN6PD-63W-S+	A7132041	2018/05	2020/05
Load 50 ohms	Fairview Microwave	ST0635F	A7152075	2018/05	2020/05
Load 50 ohms	Fairview Microwave	ST0635F	A7152076	2018/05	2020/05
Load 50 ohms	Fairview Microwave	ST0635F	A7152077	2018/05	2020/05
Load 50 ohms	Fairview Microwave	ST0635F	A7152078	2018/05	2020/05

Note: In our quality system, the test equipment calibration due is more & less 2 months

6.5. DIVERGENCE, ADDITION OR SUPPRESSION ON THE TEST SPECIFICATION

☑ None ☐ Divergence:

6.6. RESULTS

802.11a	
Short Pulse Radar	
Channel	**Channel**
Detection Radar Type 1 (%)	90
Detection Radar Type 2 (%)	96,7
Detection Radar Type 3 (%)	100
Detection Radar Type 4 (%)	90
Aggregate Radar Type 1-4 (%)	94,175
Long Pulse Radar	
Detection Radar Type 5 (%)	100
Frequency Hopping Radar	
Detection Radar Type 6 (%)	76.7

802.11n HT20	
Short Pulse Radar	
Channel	**Channel**
Detection Radar Type 1 (%)	100
Detection Radar Type 2 (%)	100
Detection Radar Type 3 (%)	96,7
Detection Radar Type 4 (%)	86,7
Aggregate Radar Type 1-4 (%)	95,85
Long Pulse Radar	
Detection Radar Type 5 (%)	100
Frequency Hopping Radar	
Detection Radar Type 6 (%)	93.3

802.11n HT40	
Short Pulse Radar	
Channel	**Channel**
Detection Radar Type 1 (%)	100,0
Detection Radar Type 2 (%)	93,3
Detection Radar Type 3 (%)	93,3
Detection Radar Type 4 (%)	93,3
Aggregate Radar Type 1-4 (%)	95,0
Long Pulse Radar	
Detection Radar Type 5 (%)	96.7
Frequency Hopping Radar	
Detection Radar Type 6 (%)	100

802.11ac VHT80	
Short Pulse Radar	
Channel	**Channel**
Detection Radar Type 1 (%)	100,0
Detection Radar Type 2 (%)	86,7
Detection Radar Type 3 (%)	90,0
Detection Radar Type 4 (%)	63,3
Aggregate Radar Type 1-4 (%)	85,0
Long Pulse Radar	
Detection Radar Type 5 (%)	93.3
Frequency Hopping Radar	
Detection Radar Type 6 (%)	100

6.7. CONCLUSION

Statistical Performance Check measurement performed on the sample of the product **SAGEMCOM FAST 5260**, SN: **NQ1736013023187**, in configuration and description presented in this test report, show levels **compliant** to the 47 CFR PART 15.407 & RSS 247 ISSUE 2 limits.

7. DYNAMIC FREQUENCY SELECTION (DFS): CHANNEL CLOSING TRANSMISSION TIME & CHANNEL MOVE TIME

7.1. TEST CONDITIONS

Test performed by : Armand MAHOUNGOU
Date of test : November 13, 2018 to December 20, 2018
Ambient temperature : 27 °C & 25 °C
Relative humidity : 44 % & 40 %

7.2. TEST SETUP

- The Equipment Under Test is:
☑ On a table
☐ In an anechoic chamber

- Measurement is performed with a spectrum analyzer:
☑ On the EUT conducted access
☐ On the EUT with a test fixture

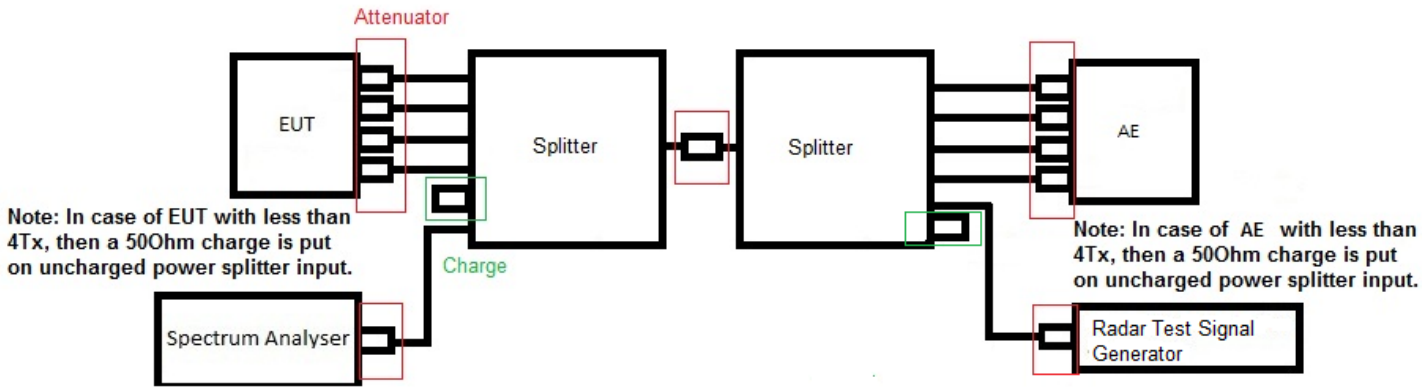

Photograph for DFS Channel Closing Transmission Time & Channel Move Time

7.3. LIMIT

Channel Closing Transmission Time shall not exceed 0.26second
Channel Move Time shall not exceed 10seconds

7.4. TEST EQUIPMENT LIST

DESCRIPTION	MANUFACTURER	MODEL	N° LCIE	Cal_Date	Cal_Due
Multi-meter	KEITHLEY	2000	A1242090	2018/05	2020/05
EMI receiver	ROHDE & SCHWARZ	ESR 7	A2642026	2017/02	2019/02
RF cable	Télédyne	920-0202-024	A5329663	2018/05	2020/05
RF cable	Télédyne	920-0202-024	A5329664	2018/05	2020/05
RF cable	Télédyne	920-0202-024	A5329665	2018/05	2020/05
RF cable	Télédyne	920-0202-024	A5329668	2018/05	2020/05
RF cable	Télédyne	920-0202-024	A5329669	2018/05	2020/05
RF cable	Télédyne	920-0202-024	A5329670	2018/05	2020/05
RF cable	Télédyne	920-0202-024	A5329672	2018/05	2020/05
RF cable	Télédyne	920-0202-024	A5329673	2018/05	2020/05
Vector signal generator	ROHDE & SCHWARZ	SMJ100A	A5444007	Verified with calibrated EMI receiver/ Spectrum analyzer before testing	
Programmable AC/DC power supply	KIKUSUI	PCR500M	A7040079	Verified with calibrated multimeter before testing	
Attenuator 10dB	MINI CIRCUITS	BW-S10W2+	A7122229	2018/05	2020/05
Attenuator 10dB	MINI CIRCUITS	BW-S10W2+	A7122230	2018/05	2020/05
RF cable & Attenuator 20dB	Télédyne & MINI CIRCUITS	920-0202-024 & FW-20+	A5329661	2018/05	2020/05
RF cable & Attenuator 20dB	Télédyne & MINI CIRCUITS	920-0202-024 & FW-20+	A5329676	2018/05	2020/05
RF cable & Attenuator 20dB	Télédyne & MINI CIRCUITS	920-0202-024 & FW-20+	A5329674	2018/05	2020/05
RF cable & Attenuator 20dB	Télédyne & MINI CIRCUITS	920-0202-024 & FW-20+	A5329675	2018/05	2020/05
Attenuator 3dB	MINI CIRCUITS	BW-S3W2+	A7122238	2018/05	2020/05
Attenuator 3dB	MINI CIRCUITS	BW-S3W2+	A7122239	2018/05	2020/05
Attenuator 3dB	MINI CIRCUITS	BW-S3W2+	A7122240	2018/05	2020/05
Attenuator 3dB	MINI CIRCUITS	BW-S3W2+	A7122241	2018/05	2020/05
Attenuator 3dB	MINI CIRCUITS	BW-S3W2+	A7122242	2018/05	2020/05
Attenuator 3dB	MINI CIRCUITS	BW-S3W2+	A7122243	2018/05	2020/05
Power splitter	Mini-Circuits	ZN6PD-63W-S+	A7132040	2018/05	2020/05
Power splitter	Mini-Circuits	ZN6PD-63W-S+	A7132041	2018/05	2020/05
Load 50 ohms	Fairview Microwave	ST0635F	A7152075	2018/05	2020/05
Load 50 ohms	Fairview Microwave	ST0635F	A7152076	2018/05	2020/05
Load 50 ohms	Fairview Microwave	ST0635F	A7152077	2018/05	2020/05
Load 50 ohms	Fairview Microwave	ST0635F	A7152078	2018/05	2020/05

Note: In our quality system, the test equipment calibration due is more & less 2 months

7.5. DIVERGENCE, ADDITION OR SUPPRESSION ON THE TEST SPECIFICATION

☑ None ☐ Divergence:

7.6. RESULTS

Channel Closing Transmission Time & Channel Move Time	
802.11ac VHT80	
C26	

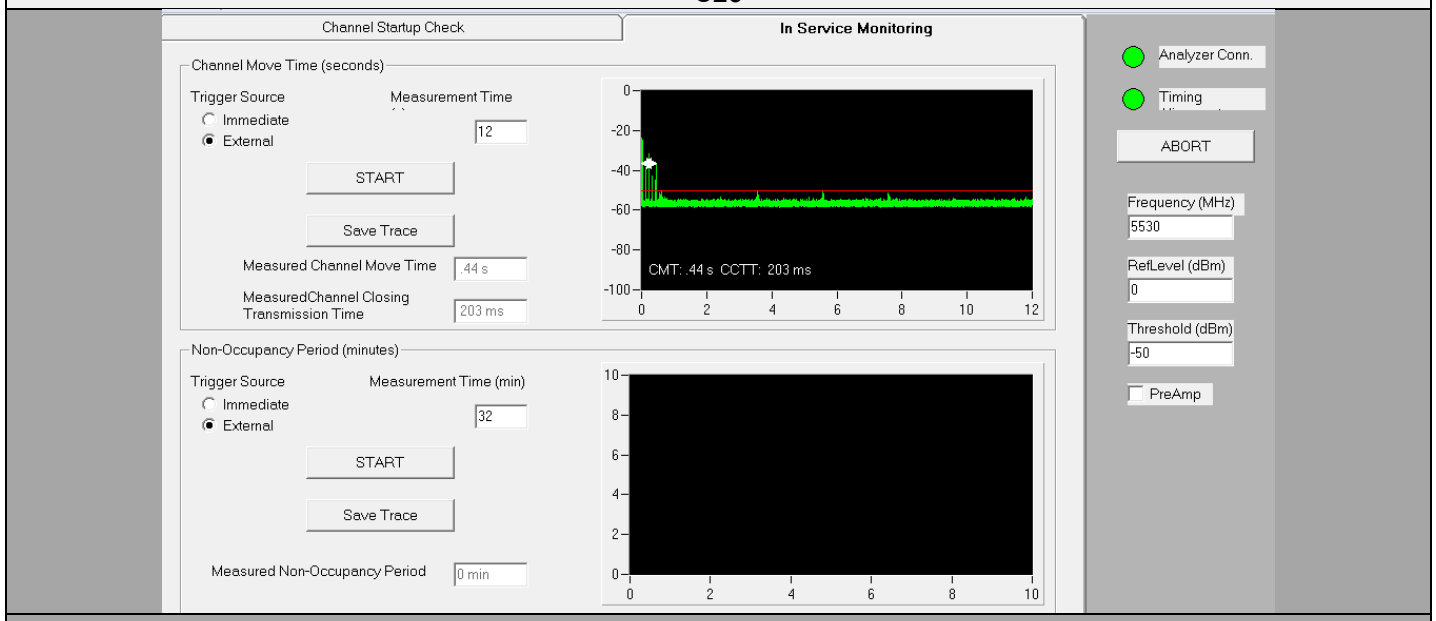

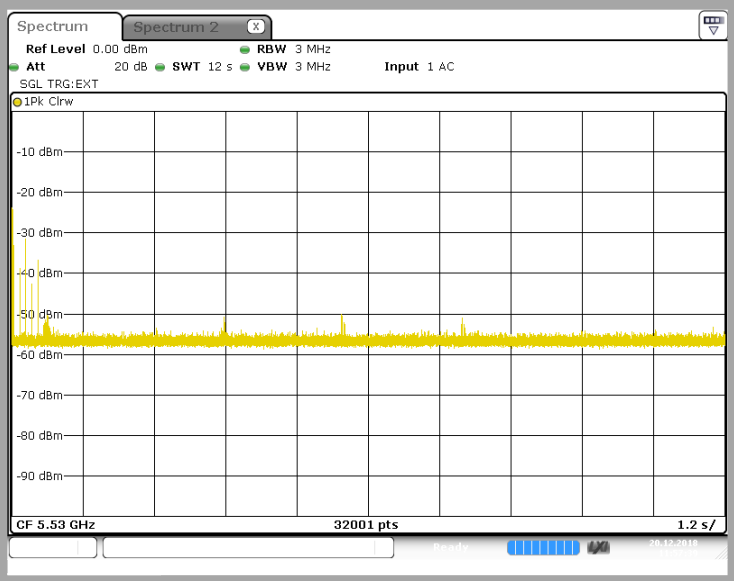

Channel Closing Transmission Time (s)	0.203
Channel Move Time (s)	0.44

7.7. CONCLUSION

Channel Closing Transmission Time & Channel Move Time measurement performed on the sample of the product **SAGEMCOM FAST 5260**, SN: **NQ1736013023187**, in configuration and description presented in this test report, show levels **compliant** to the 47 CFR PART 15.407 & RSS 247 ISSUE 2 limits.

8. DYNAMIC FREQUENCY SELECTION (DFS): NON-OCCUPANCY PERIOD

8.1. TEST CONDITIONS

Test performed by : Armand MAHOUNGOU
Date of test : November 13, 2018 to December 20, 2018
Ambient temperature : 27 °C & 25 °C
Relative humidity : 44 % & 40 %

8.2. TEST SETUP

- The Equipment Under Test is:
☑ On a table
☐ In an anechoic chamber

- Measurement is performed with a spectrum analyzer:
☑ On the EUT conducted access
☐ On the EUT with a test fixture

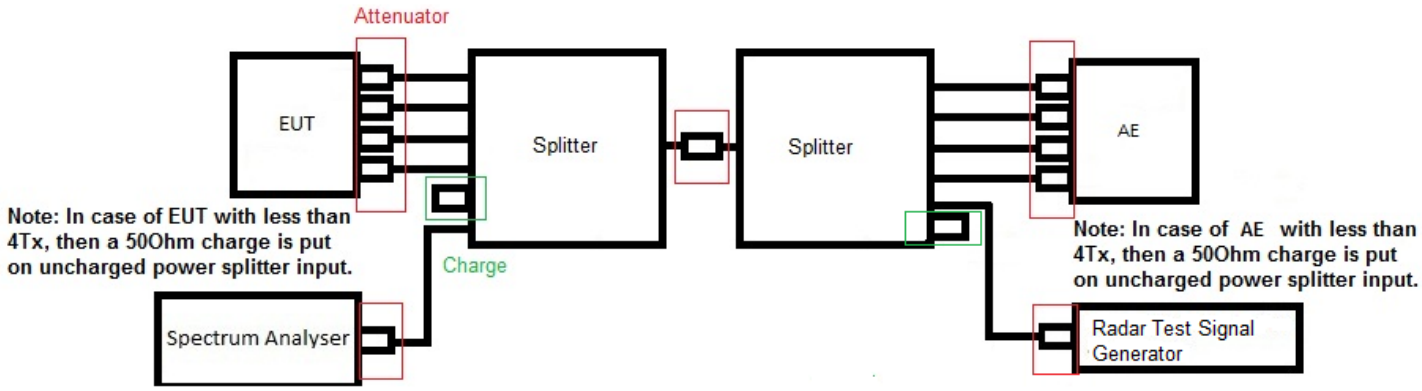

Photograph for DFS Non-Occupancy Period

8.3. LIMIT

Non-Occupancy Period shall exceed 1800 seconds

8.4. TEST EQUIPMENT LIST

DESCRIPTION	MANUFACTURER	MODEL	N° LCIE	Cal_Date	Cal_Due
Multi-meter	KEITHLEY	2000	A1242090	2018/05	2020/05
EMI receiver	ROHDE & SCHWARZ	ESR 7	A2642026	2017/02	2019/02
RF cable	Télédyne	920-0202-024	A5329663	2018/05	2020/05
RF cable	Télédyne	920-0202-024	A5329664	2018/05	2020/05
RF cable	Télédyne	920-0202-024	A5329665	2018/05	2020/05
RF cable	Télédyne	920-0202-024	A5329668	2018/05	2020/05
RF cable	Télédyne	920-0202-024	A5329669	2018/05	2020/05
RF cable	Télédyne	920-0202-024	A5329670	2018/05	2020/05
RF cable	Télédyne	920-0202-024	A5329672	2018/05	2020/05
RF cable	Télédyne	920-0202-024	A5329673	2018/05	2020/05
Vector signal generator	ROHDE & SCHWARZ	SMJ100A	A5444007	Verified with calibrated EMI receiver/ Spectrum analyzer before testing	
Programmable AC/DC power supply	KIKUSUI	PCR500M	A7040079	Verified with calibrated multimeter before testing	
Attenuator 10dB	MINI CIRCUITS	BW-S10W2+	A7122229	2018/05	2020/05
Attenuator 10dB	MINI CIRCUITS	BW-S10W2+	A7122230	2018/05	2020/05
RF cable & Attenuator 20dB	Télédyne & MINI CIRCUITS	920-0202-024 & FW-20+	A5329661	2018/05	2020/05
RF cable & Attenuator 20dB	Télédyne & MINI CIRCUITS	920-0202-024 & FW-20+	A5329676	2018/05	2020/05
RF cable & Attenuator 20dB	Télédyne & MINI CIRCUITS	920-0202-024 & FW-20+	A5329674	2018/05	2020/05
RF cable & Attenuator 20dB	Télédyne & MINI CIRCUITS	920-0202-024 & FW-20+	A5329675	2018/05	2020/05
Attenuator 3dB	MINI CIRCUITS	BW-S3W2+	A7122238	2018/05	2020/05
Attenuator 3dB	MINI CIRCUITS	BW-S3W2+	A7122239	2018/05	2020/05
Attenuator 3dB	MINI CIRCUITS	BW-S3W2+	A7122240	2018/05	2020/05
Attenuator 3dB	MINI CIRCUITS	BW-S3W2+	A7122241	2018/05	2020/05
Attenuator 3dB	MINI CIRCUITS	BW-S3W2+	A7122242	2018/05	2020/05
Attenuator 3dB	MINI CIRCUITS	BW-S3W2+	A7122243	2018/05	2020/05
Power splitter	Mini-Circuits	ZN6PD-63W-S+	A7132040	2018/05	2020/05
Power splitter	Mini-Circuits	ZN6PD-63W-S+	A7132041	2018/05	2020/05
Load 50 ohms	Fairview Microwave	ST0635F	A7152075	2018/05	2020/05
Load 50 ohms	Fairview Microwave	ST0635F	A7152076	2018/05	2020/05
Load 50 ohms	Fairview Microwave	ST0635F	A7152077	2018/05	2020/05
Load 50 ohms	Fairview Microwave	ST0635F	A7152078	2018/05	2020/05

Note: In our quality system, the test equipment calibration due is more & less 2 months

8.5. DIVERGENCE, ADDITION OR SUPPRESSION ON THE TEST SPECIFICATION

☑ None ☐ Divergence:

8.6. RESULTS

Non Occupancy Period	
Mode	
Channel	

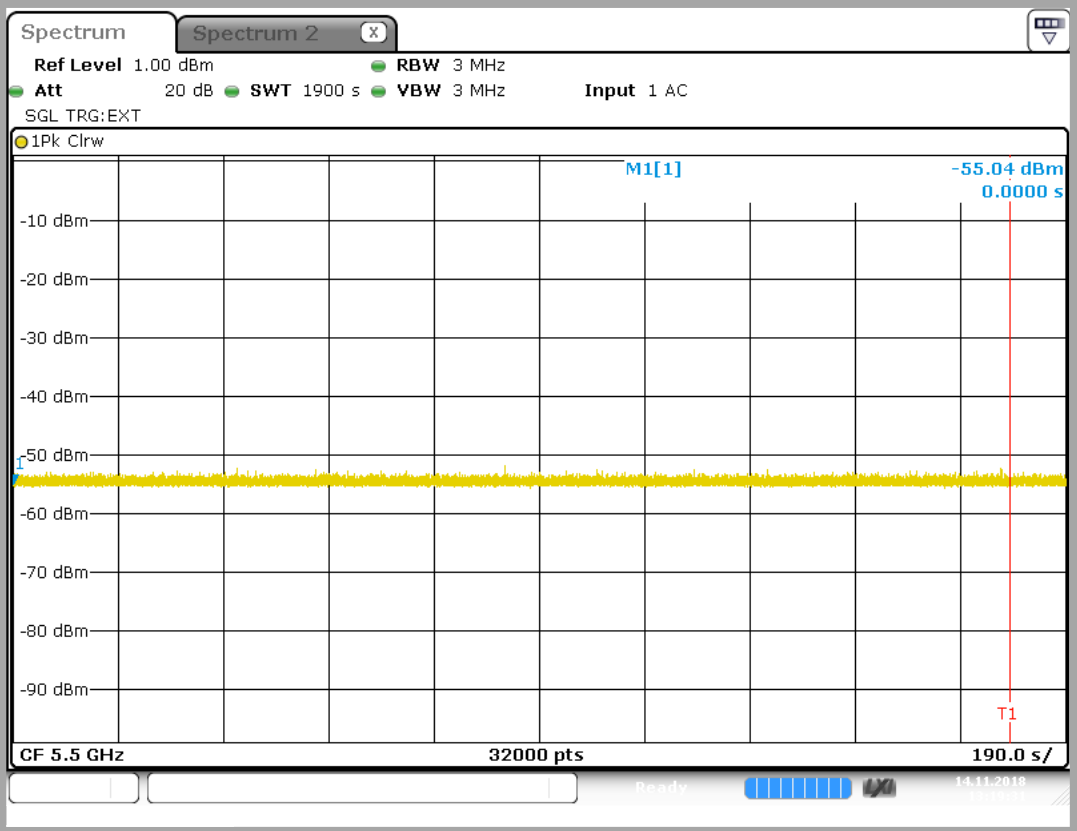

Non occupancy period (s)	➢ 1800

8.7. CONCLUSION

Non-Occupancy period measurement performed on the sample of the product **SAGEMCOM FAST 5260**, SN: **NQ1736013023187**, in configuration and description presented in this test report, show levels **compliant** to the 47 CFR PART 15.407 & RSS 247 ISSUE 2 limits.

9. ANNEX 1: U-NII DETECTION BANDWIDTH DATA SHEET

802.11a	Channel		5500	MHz							
	U-NII Detection Bandwidth										
	Trial: Detection=1 & No Detection=0										
Radar Frequency (MHz)	Trial 1	Trial 2	Trial 3	Trial 4	Trial 5	Trial 6	Trial 7	Trial 8	Trial 9	Trial 10	Detection (%)
5490	1	1	1	1	1	1	1	1	1	1	100
5495	1	1	1	1	1	1	1	1	1	1	100
5500	1	1	1	1	1	1	1	1	1	1	100
5505	1	1	1	1	1	1	1	1	1	1	100
5510	1	1	1	1	1	1	1	1	1	1	100

802.11n HT20	Channel		5500	MHz							
	U-NII Detection Bandwidth										
	Trial: Detection=1 & No Detection=0										
Radar Frequency (MHz)	Trial 1	Trial 2	Trial 3	Trial 4	Trial 5	Trial 6	Trial 7	Trial 8	Trial 9	Trial 10	Detection (%)
5490	1	1	1	1	1	1	1	1	1	1	100
5495	1	1	1	1	1	1	1	1	1	1	100
5500	1	1	1	1	1	1	1	1	1	1	100
5505	1	1	1	1	1	1	1	1	1	1	100
5510	1	1	1	1	1	1	1	1	1	1	100

802.11n HT40	Channel		5510	MHz							
	U-NII Detection Bandwidth										
	Trial: Detection=1 & No Detection=0										
Radar Frequency (MHz)	Trial 1	Trial 2	Trial 3	Trial 4	Trial 5	Trial 6	Trial 7	Trial 8	Trial 9	Trial 10	Detection (%)
5490	1	1	1	1	1	1	1	1	1	1	100
5495	1	1	1	1	1	1	1	1	1	1	100
5500	1	1	1	1	1	1	1	1	1	1	100
5505	1	1	1	1	1	1	1	1	1	1	100
5510	1	1	1	1	1	1	1	1	1	1	100
5515	1	1	1	1	1	1	1	1	1	1	100
5520	1	1	1	1	1	1	1	1	1	1	100
5525	1	1	1	1	1	1	1	1	1	1	100
5530	1	1	1	1	1	1	1	1	1	1	100

802.11ac VHT80	Channel		5530	MHz							
	U-NII Detection Bandwidth										
	Trial: Detection=1 & No Detection=0										
Radar Frequency (MHz)	Trial 1	Trial 2	Trial 3	Trial 4	Trial 5	Trial 6	Trial 7	Trial 8	Trial 9	Trial 10	Detection (%)
5490	1	1	1	1	1	1	1	1	1	1	100
5495	1	1	1	1	1	1	1	1	1	1	100
5500	1	1	1	1	1	1	1	1	1	1	100
5505	1	1	1	1	1	1	1	1	1	1	100
5510	1	1	1	1	1	1	1	1	1	1	100
5515	1	1	1	1	1	1	1	1	1	1	100
5520	1	1	1	1	1	1	1	1	1	1	100
5525	1	1	1	1	1	1	1	1	1	1	100
5530	1	1	1	1	1	1	1	1	1	1	100
5535	1	1	1	1	1	1	1	1	1	1	100
5540	1	1	1	1	1	1	1	1	1	1	100
5545	1	1	1	1	1	1	1	1	1	1	100
5550	1	1	1	1	1	1	1	1	1	1	100
5555	1	1	1	1	1	1	1	1	1	1	100
5560	1	1	1	1	1	1	1	1	1	1	100
5565	1	1	1	1	1	1	1	1	1	1	100
5570	1	1	1	1	1	1	1	1	1	1	100

10. ANNEX 2: STATISTICAL PERFORMANCE CHECK DATA SHEET

RADAR TYPE 1				802.11a	802.11n HT20	802.11n HT40	802.11ac VHT80
Trial #	Number of Pulses per Burst	Pulse Width (µsec)	PRI (µs)	Detection (1=yes/0=no)	Detection (1=yes/0=no)	Detection (1=yes/0=no)	Detection (1=yes/0=no)
1	102	1	518	1	1	1	1
2	99	1	538	1	1	1	1
3	95	1	558	1	1	1	1
4	92	1	577	1	1	1	1
5	89	1	598	1	1	1	1
6	86	1	618	1	1	1	1
7	83	1	638	1	1	1	1
8	81	1	658	1	1	1	1
9	78	1	678	1	1	1	1
10	74	1	718	1	1	1	1
11	72	1	738	1	1	1	1
12	70	1	758	1	1	1	1
13	68	1	778	1	1	0	1
14	67	1	797	1	1	1	1
15	65	1	818	1	1	1	1
16	88	1	600	1	1	1	1
17	76	1	700	1	1	1	1
18	66	1	800	1	1	1	1
19	53	1	1000	1	1	1	1
20	44	1	1200	1	1	1	1
21	38	1	1400	1	1	1	1
22	33	1	1600	0	1	1	1
23	30	1	1800	1	1	1	1
24	27	1	2000	1	1	1	1
25	24	1	2200	1	1	1	1
26	22	1	2400	0	1	1	1
27	21	1	2600	1	1	1	1
28	19	1	2800	1	1	1	1
29	19	1	2900	0	1	1	1
30	18	1	3000	1	1	1	1
Statistical Performance Check (%)				90,0	100,0	96,7	100,0

RADAR TYPE 2				802.11a	802.11n HT20	802.11n HT40	802.11ac VHT80
Trial #	Number of Pulses per Burst	Pulse Width (µsec)	PRI (µs)	Detection (1=yes/0=no)	Detection (1=yes/0=no)	Detection (1=yes/0=no)	Detection (1=yes/0=no)
1	27	3	206	1	1	1	1
2	25	1,9	154	0	1	1	1
3	25	1,6	171	1	1	1	1
4	27	4,6	222	1	1	1	1
5	26	3,4	150	1	1	1	1
6	23	4,1	165	1	1	1	0
7	23	3,7	194	1	1	1	1
8	26	4,1	219	1	1	1	1
9	29	3,9	212	1	1	1	1
10	24	1,6	207	1	1	1	1
11	25	2,1	194	1	1	1	1
12	28	2,3	185	1	1	1	1
13	25	1,8	221	1	1	1	0
14	28	1,5	228	1	1	1	1
15	28	1,9	183	1	1	1	1
16	28	2,2	163	1	1	1	1
17	24	4,7	178	1	1	0	1
18	27	3,3	165	1	1	1	0
19	26	3,3	153	1	1	1	1
20	26	5	169	1	1	1	1
21	24	1,1	209	1	1	1	0
22	28	3,1	154	1	1	0	1
23	27	2,7	222	1	1	1	1
24	23	2,2	211	1	1	1	1
25	28	2,6	172	1	1	1	1
26	24	1,9	152	1	1	1	1
27	28	4,2	157	1	1	1	1
28	27	1,5	227	1	1	1	1
29	27	3,3	164	1	1	1	1
30	26	1,6	170	1	1	1	1
Statistical Performance Check (%)				96,7	100,0	93,3	86,7

RADAR TYPE 3				802.11a	802.11n HT20	802.11n HT40	802.11ac VHT80
Trial #	Number of Pulses per Burst	Pulse Width (µsec)	PRI (µs)	Detection (1=yes/0=no)	Detection (1=yes/0=no)	Detection (1=yes/0=no)	Detection (1=yes/0=no)
1	18	6,2	483	1	1	1	1
2	16	6,6	487	1	1	1	1
3	17	9,2	441	1	1	1	1
4	18	9	283	1	1	1	1
5	16	9,7	391	1	1	1	1
6	16	6,3	419	1	1	1	1
7	16	7,3	315	1	1	1	1
8	16	8,8	494	1	1	1	1
9	18	8,3	277	1	1	1	1
10	18	6,1	452	1	1	1	1
11	16	6,8	274	1	1	1	0
12	17	9,8	488	1	1	0	1
13	17	9,8	387	1	1	1	1
14	16	9,5	385	1	0	1	1
15	17	9,2	372	1	1	1	1
16	18	7,2	337	1	1	1	1
17	17	7,1	465	1	1	1	0
18	17	8,9	258	1	1	1	1
19	16	8	292	1	1	1	1
20	17	6,1	332	1	1	1	1
21	17	10	477	1	1	1	0
22	17	6,7	468	1	1	1	1
23	17	8,9	299	1	1	1	1
24	18	7,7	383	1	1	1	1
25	17	6,7	429	1	1	1	1
26	17	8,2	490	1	1	1	1
27	17	7,6	421	1	1	1	1
28	18	6,4	387	1	1	1	1
29	17	6,5	258	1	1	1	1
30	16	6,3	357	1	1	0	1
Statistical Performance Check (%)				100,0	96,7	93,3	90,0

RADAR TYPE 4				802.11a	802.11n HT20	802.11n HT40	802.11ac VHT80
Trial #	Number of Pulses per Burst	Pulse Width (µsec)	PRI (µs)	Detection (1=yes/0=no)	Detection (1=yes/0=no)	Detection (1=yes/0=no)	Detection (1=yes/0=no)
1	16	17,4	252	1	1	1	1
2	12	14,1	229	1	1	1	1
3	15	16,5	229	0	0	1	1
4	15	17,4	270	1	1	1	0
5	15	16,9	360	0	1	1	1
6	12	17,1	362	1	1	1	0
7	14	12,1	296	1	1	1	1
8	12	12	482	1	1	1	1
9	14	17,9	220	1	1	1	1
10	15	13,1	391	1	1	1	1
11	12	13,7	396	1	1	1	0
12	13	13	355	1	1	1	1
13	15	16,9	405	1	1	1	1
14	12	16,1	241	1	1	0	0
15	13	19,8	388	0	1	1	0
16	14	17	386	1	0	1	1
17	12	12,7	497	1	1	1	0
18	15	14,2	432	1	0	1	0
19	14	11,4	320	1	1	1	0
20	12	16,9	478	1	1	1	1
21	15	13,6	314	1	0	1	1
22	12	20	467	1	1	0	1
23	16	13,8	398	1	1	1	1
24	16	19,8	459	1	1	1	0
25	15	17,4	399	1	1	1	1
26	15	16,9	226	1	1	1	1
27	13	16,9	345	1	1	1	0
28	12	13,7	404	1	1	1	0
29	15	15	295	1	1	1	1
30	15	14,5	313	1	1	1	1
Statistical Performance Check (%)				90,0	86,7	93,3	63,3

RADAR TYPE 5		802.11a	802.11n HT20	802.11n HT40	802.11ac VHT80
Trial #	See Annex	Detection (1=yes/0=no)	Detection (1=yes/0=no)	Detection (1=yes/0=no)	Detection (1=yes/0=no)
1	Trial 1	1	1	1	1
2	Trial 2	1	1	1	1
3	Trial 3	1	1	1	1
4	Trial 4	1	1	1	1
5	Trial 5	1	1	1	1
6	Trial 6	1	1	1	1
7	Trial 7	1	1	1	1
8	Trial 8	1	1	1	1
9	Trial 9	1	1	1	1
10	Trial 10	1	1	1	1
11	Trial 11	1	1	1	1
12	Trial 12	1	1	1	1
13	Trial 13	1	1	1	1
14	Trial 14	1	1	1	1
15	Trial 15	1	1	1	1
16	Trial 16	1	1	1	1
17	Trial 17	1	1	0	1
18	Trial 18	1	1	1	1
19	Trial 19	1	1	1	1
20	Trial 20	1	1	1	1
21	Trial 21	1	1	1	1
22	Trial 22	1	1	1	1
23	Trial 23	1	1	1	1
24	Trial 24	1	1	1	1
25	Trial 25	1	1	1	1
26	Trial 26	1	1	1	1
27	Trial 27	1	1	1	1
28	Trial 28	1	1	1	1
29	Trial 29	1	1	1	1
30	Trial 30	1	1	1	1
Statistical Performance Check (%)		100,0	100,0	96,7	100,0

RADAR TYPE 6		802.11a	802.11n HT20	802.11n HT40	802.11ac VHT80
Trial #	http://ntiacsd.ntia.doc.gov/dfs/HopFreqInRlanBW.txt	Detection (1=yes/0=no)	Detection (1=yes/0=no)	Detection (1=yes/0=no)	Detection (1=yes/0=no)
1	Burst 0	1	1	1	1
2	Burst 1	0	0	1	1
3	Burst 2	1	1	1	1
4	Burst 3	1	1	1	1
5	Burst 4	1	1	1	1
6	Burst 5	0	1	1	1
7	Burst 6	1	1	1	1
8	Burst 7	0	1	1	1
9	Burst 8	1	1	1	1
10	Burst 9	1	1	1	1
11	Burst 10	1	1	1	1
12	Burst 11	1	1	1	1
13	Burst 12	1	0	1	1
14	Burst 13	0	1	1	1
15	Burst 14	0	1	1	1
16	Burst 15	1	1	1	1
17	Burst 16	1	1	1	1
18	Burst 17	1	1	1	1
19	Burst 18	1	1	1	1
20	Burst 19	1	1	1	1
21	Burst 20	1	1	1	1
22	Burst 21	1	1	1	1
23	Burst 22	1	1	1	1
24	Burst 23	1	1	1	1
25	Burst 24	0	1	1	1
26	Burst 25	1	1	1	1
27	Burst 26	1	1	1	1
28	Burst 27	1	1	1	1
29	Burst 28	0	1	1	1
30	Burst 29	1	1	1	1
Statistical Performance Check (%)		76,7	93,3	100,0	100,0

11. ANNEX 3: RADAR TEST SIGNAL TYPE 5 & 0

TYPE 5 PARAMETER SHEET

Rohde & Schwarz
K6 Pulse Sequencer

Trial Number : 1

Bursts in Trial: 8

Burst	Number of Pulses	Pulse Width (µsec)	Chirp Width (MHz)	Pulse 1-to-2 Spacing (µsec)	Pulse 2-to-3 Spacing (µsec)	Start Location Within Interval (msec)
1	1	83	8			1028
2	2	89,2	20	928		137
3	2	51,3	13	1091		1139
4	3	74,1	20	1114	1237	1423
5	2	81,3	15	1828		714
6	2	64,5	7	1706		1035
7	3	87	18	1045	954	1492
8	2	79,6	19	1047		577
9						
10						
11						
12						
13						
14						
15						
16						
17						
18						
19						
20						

TYPE 5 PARAMETER SHEET

Rohde & Schwarz
K6 Pulse Sequencer

Trial Number : 2

Bursts in Trial: 9

Burst	Number of Pulses	Pulse Width (µsec)	Chirp Width (MHz)	Pulse 1-to-2 Spacing (µsec)	Pulse 2-to-3 Spacing (µsec)	Start Location Within Interval (msec)
1	1	84,8	7			1057
2	2	69,4	8	1611		744
3	2	52,8	7	1026		294
4	2	58,4	11	1001		596
5	3	87,9	17	1130	923	432
6	1	79,1	7			812
7	1	68	20			702
8	3	66,3	15	1213	1920	301
9	2	86	8	1066		430
10						
11						
12						
13						
14						
15						
16						
17						
18						
19						
20						

TYPE 5 PARAMETER SHEET

Rohde & Schwarz
K6 Pulse Sequencer

Trial Number : 3

Bursts in Trial: 10

Burst	Number of Pulses	Pulse Width (µsec)	Chirp Width (MHz)	Pulse 1-to-2 Spacing (µsec)	Pulse 2-to-3 Spacing (µsec)	Start Location Within Interval (msec)
1	3	98,2	9	1535	1372	264
2	3	73,6	18	985	1379	670
3	2	96	9	931		1069
4	2	95,1	7	1755		457
5	2	75,7	9	1863		543
6	2	71,7	15	1452		84
7	2	74,5	17	1126		525
8	3	80,6	14	1615	1146	967
9	2	56,5	19	1319		291
10	3	55,2	15	993	1070	1016
11						
12						
13						
14						
15						
16						
17						
18						
19						
20						

TYPE 5 PARAMETER SHEET

Rohde & Schwarz
K6 Pulse Sequencer

Trial Number : 4

Bursts in Trial: 11

Burst	Number of Pulses	Pulse Width (µsec)	Chirp Width (MHz)	Pulse 1-to-2 Spacing (µsec)	Pulse 2-to-3 Spacing (µsec)	Start Location Within Interval (msec)
1	1	91,3	7			70
2	2	96,1	20	1397		244
3	2	92,9	8	1222		569
4	1	93,7	9			1024
5	3	73,3	15	1243	1066	815
6	3	88,1	13	1133	1652	549
7	2	93,7	14	920		1027
8	1	99,1	6			834
9	3	88,6	17	1511	1909	600
10	2	92,5	10	1050		314
11	2	53,7	17	1624		7
12						
13						
14						
15						
16						
17						
18						
19						
20						

TYPE 5 PARAMETER SHEET

Rohde & Schwarz
K6 Pulse Sequencer

Trial Number : 5

Bursts in Trial: 12

Burst	Number of Pulses	Pulse Width (µsec)	Chirp Width (MHz)	Pulse 1-to-2 Spacing (µsec)	Pulse 2-to-3 Spacing (µsec)	Start Location Within Interval (msec)
1	1	51,8	20			641
2	2	80,1	8	1641		875
3	2	88,2	8	1852		33
4	2	71,8	10	1048		476
5	2	91,8	6	1778		910
6	2	56,8	19	1212		570
7	1	69,6	13			637
8	2	94,6	13	1595		347
9	3	52,7	18	1682	1384	483
10	2	65,5	5	1082		39
11	3	68,6	17	1467	1397	337
12	1	94,1	14			378
13						
14						
15						
16						
17						
18						
19						
20						

TYPE 5 PARAMETER SHEET

Rohde & Schwarz
K6 Pulse Sequencer

Trial Number : 6

Bursts in Trial: 13

Burst	Number of Pulses	Pulse Width (µsec)	Chirp Width (MHz)	Pulse 1-to-2 Spacing (µsec)	Pulse 2-to-3 Spacing (µsec)	Start Location Within Interval (msec)
1	2	80,3	8	1655		381
2	2	54,5	5	1022		363
3	3	68,3	12	967	1634	209
4	3	64	18	1382	1616	337
5	3	73,2	20	1339	1044	432
6	2	77,8	20	1441		910
7	1	57,2	13			137
8	3	77,3	15	1284	1888	320
9	2	72,4	10	1040		349
10	2	83,9	5	1843		849
11	2	95	13	1021		352
12	1	63,3	10			583
13	2	60,3	11	1658		285
14						
15						
16						
17						
18						
19						
20						

TYPE 5 PARAMETER SHEET

Rohde & Schwarz
K6 Pulse Sequencer

Trial Number : 7

Bursts in Trial: 14

Burst	Number of Pulses	Pulse Width (µsec)	Chirp Width (MHz)	Pulse 1-to-2 Spacing (µsec)	Pulse 2-to-3 Spacing (µsec)	Start Location Within Interval (msec)
1	1	60,8	19			487
2	2	91	14	1147		817
3	1	57,8	9			597
4	1	77,6	8			20
5	2	66,3	13	1151		92
6	1	97,5	7			569
7	1	90,1	10			716
8	1	53	6			403
9	3	50,5	17	1524	1311	397
10	1	55,8	10			121
11	2	73,7	12	1777		285
12	3	55,3	12	968	1848	240
13	2	79,8	7	1709		178
14	3	84,3	6	1627	1577	180
15						
16						
17						
18						
19						
20						

TYPE 5 PARAMETER SHEET

Rohde & Schwarz
K6 Pulse Sequencer

Trial Number : 8

Bursts in Trial: 15

Burst	Number of Pulses	Pulse Width (µsec)	Chirp Width (MHz)	Pulse 1-to-2 Spacing (µsec)	Pulse 2-to-3 Spacing (µsec)	Start Location Within Interval (msec)
1	2	65,3	10	1635		169
2	2	90,7	9	1682		356
3	1	87,7	18			265
4	1	82,7	6			216
5	1	85,2	20			370
6	2	67,9	6	1090		639
7	3	61,6	11	1413	990	778
8	2	73,1	7	1591		519
9	3	51,6	15	1882	1340	551
10	1	83,4	12			743
11	2	93,1	5	1741		660
12	2	88,6	7	1004		746
13	3	91,9	19	1291	1892	313
14	2	90,7	20	1628		362
15	1	52,4	17			37
16						
17						
18						
19						
20						

TYPE 5 PARAMETER SHEET

Rohde & Schwarz
K6 Pulse Sequencer

Trial Number : 9

Bursts in Trial: 16

Burst	Number of Pulses	Pulse Width (µsec)	Chirp Width (MHz)	Pulse 1-to-2 Spacing (µsec)	Pulse 2-to-3 Spacing (µsec)	Start Location Within Interval (msec)
1	2	84,1	7	1896		659
2	2	69,1	7	1696		266
3	1	71,7	7			703
4	1	83	20			631
5	2	96,8	11	1232		567
6	2	61,1	11	1241		647
7	1	70,1	5			418
8	2	62,5	19	1144		149
9	2	78,3	13	1703		296
10	2	97,4	15	1728		700
11	3	88,9	17	1759	1060	246
12	3	91	13	1606	1572	468
13	3	76,5	11	1082	1896	231
14	1	64,5	12			182
15	2	60,2	18	1314		311
16	3	90,4	14	1415	1474	705
17						
18						
19						
20						

TYPE 5 PARAMETER SHEET

Rohde & Schwarz
K6 Pulse Sequencer

Trial Number : 10

Bursts in Trial: 17

Burst	Number of Pulses	Pulse Width (µsec)	Chirp Width (MHz)	Pulse 1-to-2 Spacing (µsec)	Pulse 2-to-3 Spacing (µsec)	Start Location Within Interval (msec)
1	2	66,2	20	1769		164
2	1	83	8			264
3	2	99,6	18	1270		570
4	3	98,4	14	1283	1283	221
5	3	55,6	13	1939	1733	185
6	2	97,5	20	1492		485
7	1	55,5	17			652
8	3	77,4	5	1637	1876	182
9	1	77,6	15			610
10	2	71,9	15	1457		246
11	3	80	15	1005	1786	413
12	1	65,2	11			118
13	2	92	8	1265		519
14	3	68,6	18	1138	1708	457
15	1	94,3	8			451
16	2	70,7	18	1093		207
17	2	63,4	8	1080		132
18						
19						
20						

TYPE 5 PARAMETER SHEET

Rohde & Schwarz
K6 Pulse Sequencer

Trial Number : 11

Bursts in Trial: 18

Burst	Number of Pulses	Pulse Width (µsec)	Chirp Width (MHz)	Pulse 1-to-2 Spacing (µsec)	Pulse 2-to-3 Spacing (µsec)	Start Location Within Interval (msec)
1	2	79,7	5	1563		647
2	2	59,3	19	1693		423
3	2	52,1	13	1625		110
4	1	93,8	19			194
5	2	93	6	1550		97
6	2	87,6	14	1233		448
7	3	62	7	1063	1503	144
8	3	95,4	19	1430	1577	282
9	1	82,8	7			514
10	3	51,2	15	1404	1885	187
11	2	81	8	1554		392
12	3	81,6	5	1254	1055	387
13	2	62,1	14	1006		291
14	2	82	13	1003		435
15	2	60,9	18	1027		508
16	1	58,2	10			230
17	2	80,6	6	1027		468
18	2	65,7	15	1878		279
19						
20						

TYPE 5 PARAMETER SHEET

Rohde & Schwarz
K6 Pulse Sequencer

Trial Number : 12

Bursts in Trial: 19

Burst	Number of Pulses	Pulse Width (µsec)	Chirp Width (MHz)	Pulse 1-to-2 Spacing (µsec)	Pulse 2-to-3 Spacing (µsec)	Start Location Within Interval (msec)
1	2	78,6	10	1208		558
2	3	93,2	11	1743	1155	475
3	2	86	13	1719		70
4	1	76,4	13			529
5	1	84,4	10			144
6	1	68,4	5			422
7	2	65,1	11	1250		524
8	2	58,6	13	1372		384
9	3	68,6	15	1499	1321	476
10	3	91,8	13	1201	1475	19
11	3	88,4	7	1274	1510	451
12	2	91,2	20	1331		469
13	3	87,7	11	1356	1716	214
14	3	61,1	13	1718	957	29
15	3	77,1	11	1257	1093	477
16	2	81,7	7	1792		256
17	3	53,6	13	1304	1449	246
18	1	68,2	19			237
19	1	93,8	20			57
20						

TYPE 5 PARAMETER SHEET

Rohde & Schwarz
K6 Pulse Sequencer

Trial Number : 13

Bursts in Trial: 20

Burst	Number of Pulses	Pulse Width (µsec)	Chirp Width (MHz)	Pulse 1-to-2 Spacing (µsec)	Pulse 2-to-3 Spacing (µsec)	Start Location Within Interval (msec)
1	2	67,2	11	1581		422
2	2	64,9	13	1929		404
3	2	88,1	10	1131		298
4	2	75,5	18	1884		18
5	3	69,9	9	1348	1175	523
6	2	80,4	9	1074		12
7	2	55	9	1831		4
8	2	70,1	11	988		320
9	3	98,8	17	1502	1211	35
10	3	58,8	12	1019	1687	83
11	2	67,9	8	1268		285
12	1	85,6	7			410
13	2	93,5	19	1574		134
14	3	58,4	10	968	1893	168
15	1	73,8	17			266
16	3	95	19	922	1739	183
17	3	63,6	5	1267	1251	146
18	2	74,8	10	1175		336
19	2	62,9	5	1110		131
20	1	72,8	15			496

TYPE 5 PARAMETER SHEET

Rohde & Schwarz
K6 Pulse Sequencer

Trial Number : 14

Bursts in Trial: 8

Burst	Number of Pulses	Pulse Width (µsec)	Chirp Width (MHz)	Pulse 1-to-2 Spacing (µsec)	Pulse 2-to-3 Spacing (µsec)	Start Location Within Interval (msec)
1	3	64,2	19	1609	1360	1089
2	2	88,4	17	1751		1357
3	1	51,1	14			1003
4	3	63,6	15	963	962	1376
5	1	84,3	11			937
6	3	90,7	5	1098	986	1068
7	2	93	20	1130		1124
8	2	67,4	12	1308		574
9						
10						
11						
12						
13						
14						
15						
16						
17						
18						
19						
20						

TYPE 5 PARAMETER SHEET

Rohde & Schwarz
K6 Pulse Sequencer

Trial Number : 15

Bursts in Trial: 9

Burst	Number of Pulses	Pulse Width (µsec)	Chirp Width (MHz)	Pulse 1-to-2 Spacing (µsec)	Pulse 2-to-3 Spacing (µsec)	Start Location Within Interval (msec)
1	1	62,3	5			128
2	3	76,5	8	1019	1323	486
3	2	82,5	5	1183		911
4	2	54	10	1805		972
5	3	94,7	18	1565	1079	46
6	3	53,9	19	1625	1139	570
7	3	55,6	13	1623	1927	1143
8	2	68,3	13	1890		1163
9	3	99,8	8	1857	1735	249
10						
11						
12						
13						
14						
15						
16						
17						
18						
19						
20						

TYPE 5 PARAMETER SHEET

Rohde & Schwarz
K6 Pulse Sequencer

Trial Number : 16

Bursts in Trial: 10

Burst	Number of Pulses	Pulse Width (µsec)	Chirp Width (MHz)	Pulse 1-to-2 Spacing (µsec)	Pulse 2-to-3 Spacing (µsec)	Start Location Within Interval (msec)
1	2	54,1	5	1152		389
2	2	78,9	13	1150		881
3	1	77,6	13			980
4	1	85,8	14			40
5	3	74,8	15	1596	976	418
6	1	99,2	5			129
7	3	71,5	6	1454	1858	947
8	1	67,5	5			413
9	2	68,7	9	1840		1060
10	3	81,2	13	1604	1132	803
11						
12						
13						
14						
15						
16						
17						
18						
19						
20						

TYPE 5 PARAMETER SHEET

Rohde & Schwarz
K6 Pulse Sequencer

Trial Number : 17

Bursts in Trial: 11

Burst	Number of Pulses	Pulse Width (µsec)	Chirp Width (MHz)	Pulse 1-to-2 Spacing (µsec)	Pulse 2-to-3 Spacing (µsec)	Start Location Within Interval (msec)
1	1	78,5	8			441
2	1	60,8	9			62
3	1	96,8	11			942
4	2	65,9	17	1306		1079
5	3	95,3	6	1571	1562	269
6	2	67	17	962		44
7	2	92,9	19	1635		503
8	3	74,3	14	1463	1896	264
9	3	77,7	10	1875	1453	115
10	2	75,1	6	1036		465
11	1	94,8	19			676
12						
13						
14						
15						
16						
17						
18						
19						
20						

TYPE 5 PARAMETER SHEET

Rohde & Schwarz
K6 Pulse Sequencer

Trial Number : 18

Bursts in Trial: 12

Burst	Number of Pulses	Pulse Width (µsec)	Chirp Width (MHz)	Pulse 1-to-2 Spacing (µsec)	Pulse 2-to-3 Spacing (µsec)	Start Location Within Interval (msec)
1	2	53,1	8	1042		583
2	2	59,6	13	989		824
3	3	72,4	5	1686	1217	658
4	2	66,6	17	1726		663
5	3	57,3	6	1791	1191	602
6	1	51,9	18			955
7	1	56,1	13			900
8	2	96,1	6	1368		599
9	1	93,4	18			634
10	1	97,3	11			534
11	3	50,5	7	1103	1061	599
12	2	67,1	18	1036		489
13						
14						
15						
16						
17						
18						
19						
20						

TYPE 5 PARAMETER SHEET

Rohde & Schwarz
K6 Pulse Sequencer

Trial Number : 19

Bursts in Trial: 8

Burst	Number of Pulses	Pulse Width (µsec)	Chirp Width (MHz)	Pulse 1-to-2 Spacing (µsec)	Pulse 2-to-3 Spacing (µsec)	Start Location Within Interval (msec)
1	2	61,4	18	1761		1229
2	3	69,1	7	1759	1639	1136
3	3	56,5	8	961	1228	508
4	1	87,2	19			993
5	2	96	7	1852		1374
6	3	51,8	15	1295	1517	522
7	3	71,8	17	1651	1422	1394
8	2	54,3	20	1296		952
9						
10						
11						
12						
13						
14						
15						
16						
17						
18						
19						
20						

TYPE 5 PARAMETER SHEET

Rohde & Schwarz
K6 Pulse Sequencer

Trial Number : 20

Bursts in Trial: 9

Burst	Number of Pulses	Pulse Width (µsec)	Chirp Width (MHz)	Pulse 1-to-2 Spacing (µsec)	Pulse 2-to-3 Spacing (µsec)	Start Location Within Interval (msec)
1	1	84,5	6			890
2	2	89,4	8	1712		681
3	2	86,5	13	1634		839
4	2	57,4	18	1601		1217
5	2	95,7	5	1062		798
6	3	94,5	5	1745	1189	216
7	2	70,5	12	1385		548
8	2	69,9	11	1924		134
9	2	96	13	1778		692
10						
11						
12						
13						
14						
15						
16						
17						
18						
19						
20						

TYPE 5 PARAMETER SHEET

Rohde & Schwarz
K6 Pulse Sequencer

Trial Number : 21

Bursts in Trial: 10

Burst	Number of Pulses	Pulse Width (µsec)	Chirp Width (MHz)	Pulse 1-to-2 Spacing (µsec)	Pulse 2-to-3 Spacing (µsec)	Start Location Within Interval (msec)
1	2	61,1	18	1731		841
2	1	69,6	17			421
3	2	80,5	7	1015		29
4	2	51,3	14	1021		657
5	2	52,7	14	1046		790
6	2	63,3	20	1279		230
7	1	63,9	12			310
8	3	52,2	9	1109	1579	593
9	2	63,6	14	1519		807
10	3	56	17	1375	1076	205
11						
12						
13						
14						
15						
16						
17						
18						
19						
20						

TYPE 5 PARAMETER SHEET

Rohde & Schwarz
K6 Pulse Sequencer

Trial Number : 22

Bursts in Trial: 11

Burst	Number of Pulses	Pulse Width (µsec)	Chirp Width (MHz)	Pulse 1-to-2 Spacing (µsec)	Pulse 2-to-3 Spacing (µsec)	Start Location Within Interval (msec)
1	1	85,3	9			517
2	1	60,9	19			1056
3	3	65,2	7	1138	1571	1076
4	3	53,5	8	1862	1214	174
5	2	55,8	13	1101		639
6	2	64,9	7	1630		809
7	2	84,3	19	1556		686
8	2	60,8	13	981		363
9	3	86,7	14	1450	1851	531
10	3	82,4	17	1139	1862	239
11	3	58,1	18	1102	1299	307
12						
13						
14						
15						
16						
17						
18						
19						
20						

TYPE 5 PARAMETER SHEET

Rohde & Schwarz
K6 Pulse Sequencer

Trial Number : 23

Bursts in Trial: 12

Burst	Number of Pulses	Pulse Width (µsec)	Chirp Width (MHz)	Pulse 1-to-2 Spacing (µsec)	Pulse 2-to-3 Spacing (µsec)	Start Location Within Interval (msec)
1	1	65,7	8			549
2	1	81,7	6			6
3	2	61,8	5	1257		610
4	2	99,5	7	1559		681
5	2	75,5	20	1196		923
6	2	77,7	15	1495		99
7	2	56	7	1268		285
8	2	78,5	9	1892		142
9	2	96,7	17	1834		977
10	2	85,6	13	1022		478
11	1	88,1	19			212
12	2	86,8	17	1007		483
13						
14						
15						
16						
17						
18						
19						
20						

TYPE 5 PARAMETER SHEET

Rohde & Schwarz
K6 Pulse Sequencer

Trial Number : 24

Bursts in Trial: 13

Burst	Number of Pulses	Pulse Width (µsec)	Chirp Width (MHz)	Pulse 1-to-2 Spacing (µsec)	Pulse 2-to-3 Spacing (µsec)	Start Location Within Interval (msec)
1	1	79,5	20			383
2	3	88,7	20	1519	1294	340
3	2	64,6	5	1619		597
4	2	65,1	17	1365		367
5	2	56,2	20	1095		229
6	3	50,7	11	1637	1159	633
7	3	87,7	14	944	1559	719
8	3	65,6	9	1644	1834	745
9	2	81,4	13	1455		898
10	1	90,7	15			382
11	2	85,6	9	1419		461
12	2	88,3	17	1801		103
13	2	59	14	1701		698
14						
15						
16						
17						
18						
19						
20						

TYPE 5 PARAMETER SHEET

Rohde & Schwarz
K6 Pulse Sequencer

Trial Number : 25

Bursts in Trial: 14

Burst	Number of Pulses	Pulse Width (µsec)	Chirp Width (MHz)	Pulse 1-to-2 Spacing (µsec)	Pulse 2-to-3 Spacing (µsec)	Start Location Within Interval (msec)
1	2	90,3	20	1361		325
2	2	63,8	10	1434		802
3	1	68,6	5			129
4	1	69,6	13			410
5	3	75,2	13	1208	1604	189
6	2	82,1	18	1766		131
7	2	92,5	18	1688		91
8	2	65,1	17	1648		822
9	3	99,6	18	1235	1393	742
10	2	81,9	18	1280		705
11	2	82,3	12	1255		849
12	1	94,3	5			19
13	2	55,9	15	1784		741
14	3	83,1	15	1226	1329	205
15						
16						
17						
18						
19						
20						

TYPE 5 PARAMETER SHEET

Rohde & Schwarz
K6 Pulse Sequencer

Trial Number : 26

Bursts in Trial: 15

Burst	Number of Pulses	Pulse Width (µsec)	Chirp Width (MHz)	Pulse 1-to-2 Spacing (µsec)	Pulse 2-to-3 Spacing (µsec)	Start Location Within Interval (msec)
1	3	87,6	9	1547	1025	642
2	2	82,5	10	1377		607
3	3	56,5	9	1437	994	231
4	2	99	6	1240		478
5	1	79,6	5			695
6	2	87,7	18	1830		633
7	3	60,5	18	1504	1118	258
8	3	97,1	18	1587	1144	394
9	3	79,3	14	1071	1272	450
10	1	56,6	7			322
11	2	93,2	19	967		6
12	2	85,7	5	1861		603
13	2	90	8	1177		109
14	2	67	20	1690		441
15	2	90,9	9	1469		138
16						
17						
18						
19						
20						

TYPE 5 PARAMETER SHEET

Rohde & Schwarz
K6 Pulse Sequencer

Trial Number : 27

Bursts in Trial: 16

Burst	Number of Pulses	Pulse Width (µsec)	Chirp Width (MHz)	Pulse 1-to-2 Spacing (µsec)	Pulse 2-to-3 Spacing (µsec)	Start Location Within Interval (msec)
1	2	80,7	5	1043		405
2	3	61,7	9	1412	1823	24
3	1	63,1	9			261
4	2	67	5	1819		532
5	1	58,3	13			172
6	1	71,3	12			40
7	2	94,2	10	1776		347
8	2	75,3	12	1395		397
9	2	91,3	11	1908		163
10	3	66,5	14	1133	1814	711
11	2	68	13	1780		518
12	3	72,4	6	1796	1266	180
13	3	98,4	14	955	1835	64
14	2	81	6	1065		635
15	2	57,2	18	1274		676
16	2	99,1	18	1873		740
17						
18						
19						
20						

TYPE 5 PARAMETER SHEET

Rohde & Schwarz
K6 Pulse Sequencer

Trial Number : 28

Bursts in Trial: 17

Burst	Number of Pulses	Pulse Width (µsec)	Chirp Width (MHz)	Pulse 1-to-2 Spacing (µsec)	Pulse 2-to-3 Spacing (µsec)	Start Location Within Interval (msec)
1	3	78,2	15	1832	1762	213
2	2	66,4	8	1589		177
3	2	79,5	5	1417		52
4	3	71	13	1906	1049	75
5	1	85,5	9			515
6	2	56,2	14	1332		209
7	2	82,3	12	1444		296
8	2	55,9	18	1519		49
9	2	73,5	6	1892		371
10	1	94,9	10			184
11	3	59,7	13	974	1059	240
12	1	84	20			593
13	2	87,4	9	1647		77
14	1	97,5	13			567
15	2	74,8	7	1235		518
16	2	90	19	1543		266
17	2	53,9	9	1207		557
18						
19						
20						

TYPE 5 PARAMETER SHEET

Rohde & Schwarz
K6 Pulse Sequencer

Trial Number : 29

Bursts in Trial: 18

Burst	Number of Pulses	Pulse Width (µsec)	Chirp Width (MHz)	Pulse 1-to-2 Spacing (µsec)	Pulse 2-to-3 Spacing (µsec)	Start Location Within Interval (msec)
1	2	68,2	13	1691		590
2	3	84,7	6	1099	1764	138
3	3	52,7	13	1147	1362	205
4	2	52,5	15	1254		96
5	2	87,6	8	1432		346
6	3	99,6	17	1038	1096	435
7	1	55,1	12			471
8	1	91,7	10			315
9	2	86,6	9	1755		225
10	2	76,2	13	1067		200
11	3	70,3	20	1773	1044	612
12	2	79,5	11	1328		6
13	2	73,8	5	1213		61
14	1	93,8	10			657
15	3	98,9	20	1284	1416	297
16	3	85,5	8	1732	1580	54
17	2	65,2	19	1483		368
18	1	74	20			297
19						
20						

TYPE 5 PARAMETER SHEET

Rohde & Schwarz
K6 Pulse Sequencer

Trial Number : 30

Bursts in Trial: 19

Burst	Number of Pulses	Pulse Width (µsec)	Chirp Width (MHz)	Pulse 1-to-2 Spacing (µsec)	Pulse 2-to-3 Spacing (µsec)	Start Location Within Interval (msec)
1	3	92,9	13	1390	1002	447
2	2	89,7	11	979		5
3	3	59,1	13	1015	1601	394
4	2	66,4	17	1571		415
5	1	81,2	18			172
6	3	52,3	17	1727	1599	460
7	2	95,1	19	1074		366
8	3	55,3	7	975	1524	92
9	2	70,2	14	1322		193
10	3	78,9	13	1252	1503	235
11	1	54	7			171
12	2	81,3	20	1439		67
13	2	77,2	13	1747		520
14	3	78,3	20	1714	1589	317
15	2	75,6	15	1838		199
16	2	87,3	7	1050		319
17	1	97,8	17			377
18	3	76,3	17	1183	952	557
19	3	66,4	9	1031	1586	608
20						

TYPE 0

Pulses per Burst	Pulse Width (µsec)	PRI (µs)
18	1	1428

12. ANNEX 4 : FAMILY PRODUCT

SAGEMCOM

Date: January 16, 2014

Object: Creation variant "Fast 5260"

TO WHOM MIGHT BE CONCERNED

Dear Sirs,

Hereby, we declare that the router "Fast 5260" is a variant of the router "F@st 5260CV".
This variant is created by removing e-SATA interface and one USB interface.
The radio equipment's and the software of the variant "Fast 5260" are the same as for the reference product "F@st 5260CV".

See the description of the differences between "Fast 5260" and "F@st 5260CV" on the next pages.

Sincerely,

Name: Laurent GAVOILLE

Title: R&D Director
Broadband and Residential Terminals Business Unit

Sagemcom SAS
Siège social : 250, route de l'Empereur - 92848 RUEIL-MALMAISON CEDEX - FRANCE
TEL. +33(0)1 57 61 10 00 - Fax. +33 (0)1 57 61 10 01
S.A.S. au capital de 138 296 895 € - 440 294 510 RCS Nanterre
www.sagemcom.com

1

Sagemcom

Reference F@st 5260CV	Variant Fast 5260
FCC ID : VW3FAST5260CV	FCC ID : VW3FAST5260

New plastic box without openings for e-SATA and one USB connectors

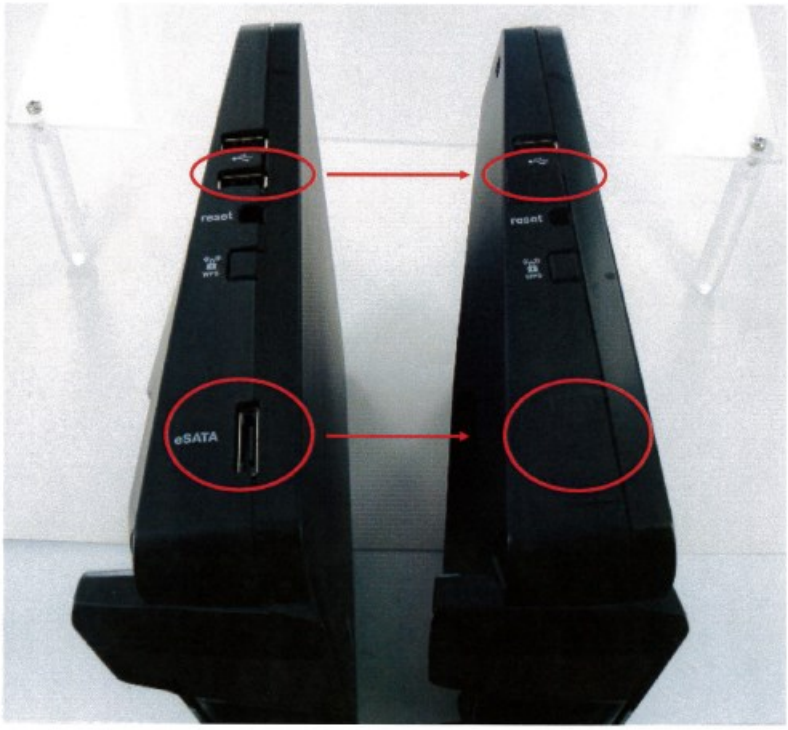

Sagemcom SAS
Siège social : 250, route de l'Empereur - 92848 RUEIL-MALMAISON CEDEX - FRANCE
TEL. +33(0)1 57 61 10 00 - Fax : +33 (0)1 57 61 10 01
S.A.S. au capital de 158 293 895 € - 440 294 510 RCS Nanterre
www.sagemcom.com

2

Sagemcom

Reference F@st 5260CV	Variant Fast 5260
FCC ID : VW3FAST5260CV	FCC ID : VW3FAST5260

Removal of connectors and components for e-SATA and one USB interfaces

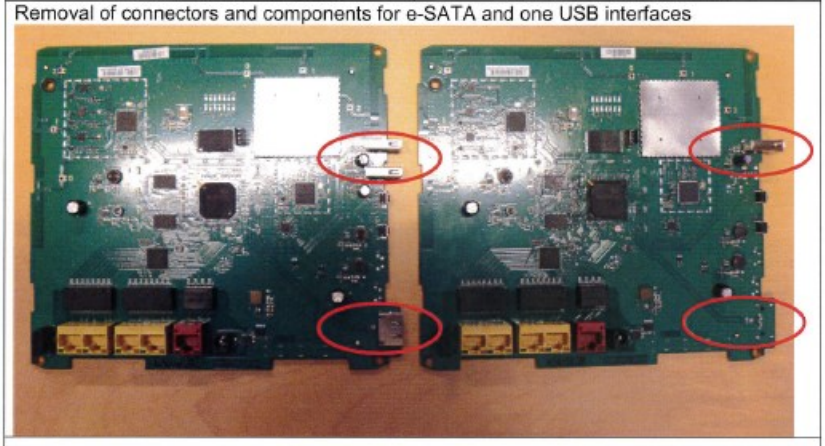

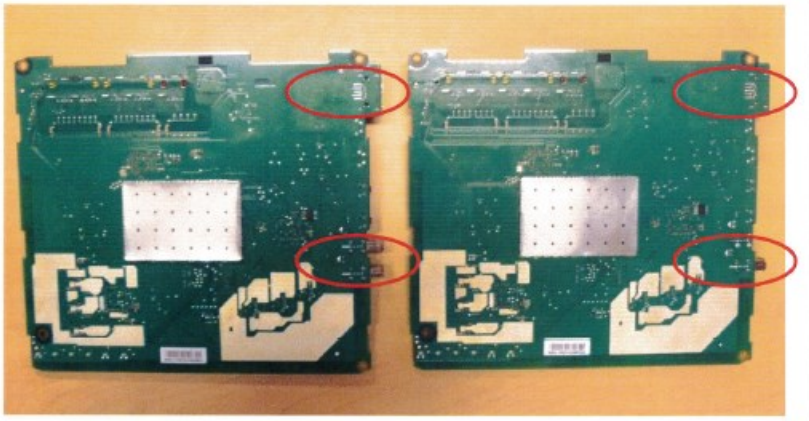

Sagemcom SAS
Siège social : 250, route de l'Empereur - 92848 RUEIL-MALMAISON CEDEX - FRANCE
Tél. +33(0)1 57 61 10 00 - Fax : +33 (0)1 57 61 10 01
S.A.S. au capital de 158 291 895 € - 440 296 510 RCS Nanterre
www.sagemcom.com

3

Sagemcom

Variant Fast 5260

List and location of removed components

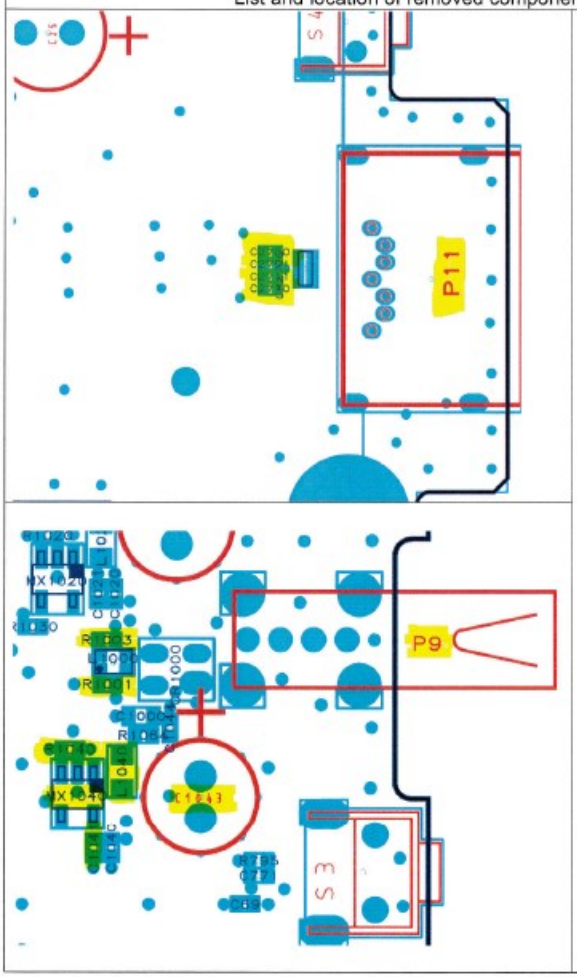

Components in yellow color are removed
P9
P11
C1041
C1043
C2700
C2701
C2710
C2711
L1040
R1001
R1003
R1040
MX1040

Sagemcom SAS
Siège social : 250, route de l'Empereur - 92848 RUEIL-MALMAISON CEDEX - FRANCE
Tél. +33(0)1 57 61 10 00 - Fax +33 (0)1 57 61 10 01
S.A.S. au capital de 138 293 895 € - 440 294 510 RCS Nanterre
www.sagemcom.com

4

13. UNCERTAINTIES CHART

47 CFR Part 15.209 & 15.207 Kind of test	Wide uncertainty laboratory (k=2) ±x(dB) / (Hz)/ ms	Uncertainty limit
Measurement of conducted disturbances in voltage on the AC power port (9 kHz – 150 kHz)	2,67	3.8
Measurement of conducted disturbances in voltage on the AC power port (150 kHz – 30 MHz)	2,67	3.4
Measurement of conducted disturbances in voltage on the telecommunication port. (AAN)	3,67	5.0
Measurement of conducted disturbances in current (current clamp)	2,73	2.9
Measurement of disturbance power	2,67	4.5
Measurement of radiated magnetic field from 10kHz to 30MHz in SAC V01	4,48	/
Measurement of radiated magnetic field from 10kHz to 30MHz in SAC C01	4,48	/
Measurement of radiated electric field from 30 to 1000MHz in horizontal position on the OATS (Ecuelles)	4,88	6.3
Measurement of radiated electric field from 1 to 18GHz on the Ecuelles site	5.16	/
Measurement of radiated electric field from 30 to 1000MHz in vertical position on the OATS (Ecuelles)	4,99	6.3
Measurement of radiated electric field from 30 to 1000MHz in horizontal position in SAC C01	5,08	6.3
Measurement of radiated electric field from 30 to 1000MHz in vertical position in SAC C01	5,16	6.3
Measurement of radiated electric field from 30 to 1000MHz in horizontal position in SAC V01	5,08	6.3
Measurement of radiated electric field from 30 to 1000MHz in vertical position in SAC V01	5,15	6.3
Measurement of radiated electric field from 1 to 6 GHz C01	5,1	5.2
Measurement of radiated electric field from 1 to 6 GHz V01	4,85	5.2
Measurement of radiated magnetic field from 10kHz to 30MHz on the OATS (Ecuelles)	4,48	/

The uncertainty values calculated by the laboratory are lower than limit uncertainty values defined by the CISPR. The conformity of the sample is directly established by the applicable limits values. This table includes all uncertainties maximum feasible for testing in the laboratory, whether or not made in this report