PEGATRON 5G

Antenna measurement report for project HH5K

Pegatron BU6

2025/03/25

This file may contain confidential and/or privileged information. Any unauthorized copying, disclosure or distribution of the material in this file is strictly forbidden.

Antenna proposal and specification

Antenna Proposal		
Wireless Function	■Wi-Fi 2.4G antenna 4X4 ■Wi-Fi 5G Radio#1 antenna 4X4 ■Wi-Fi 6G Radio#2 antenna 4X4	
Antenna type	■On-board : 2G antenna*2 ■ On-board : 5G antenna*3 ■ On-board : 6G antenna*1 ■ Off-board : DB antenna*1 ■ Off-board : 2G antenna*1 ■ Off-board : 5G antenna*1 ■ Off-board : 6G antenna*2	
	Customer Spec	**Measurement data**
Return loss	< -13dB	< -13dB
Isolation	■ between 2.4G < -18 dB ■ between 5G/6G <-18 dB ■ 5G to 6G < -30 dB	■ between 2.4G < -25dB ■ between 5G & 6G <-20dB ■ 5G to 6G < -30 dB
Efficiency	■ 2.4G antenna > 65%. ■ 5G antenna > 60% ■ 6G antenna > 60 %	■ 2.4G antenna > 60%. ■ 5G antenna > 60 % ■ 6G antenna > 60 %

All rights reserved. Information in this leaflet is proprietary to Pegatron Corp.

Antenna proposal and specification

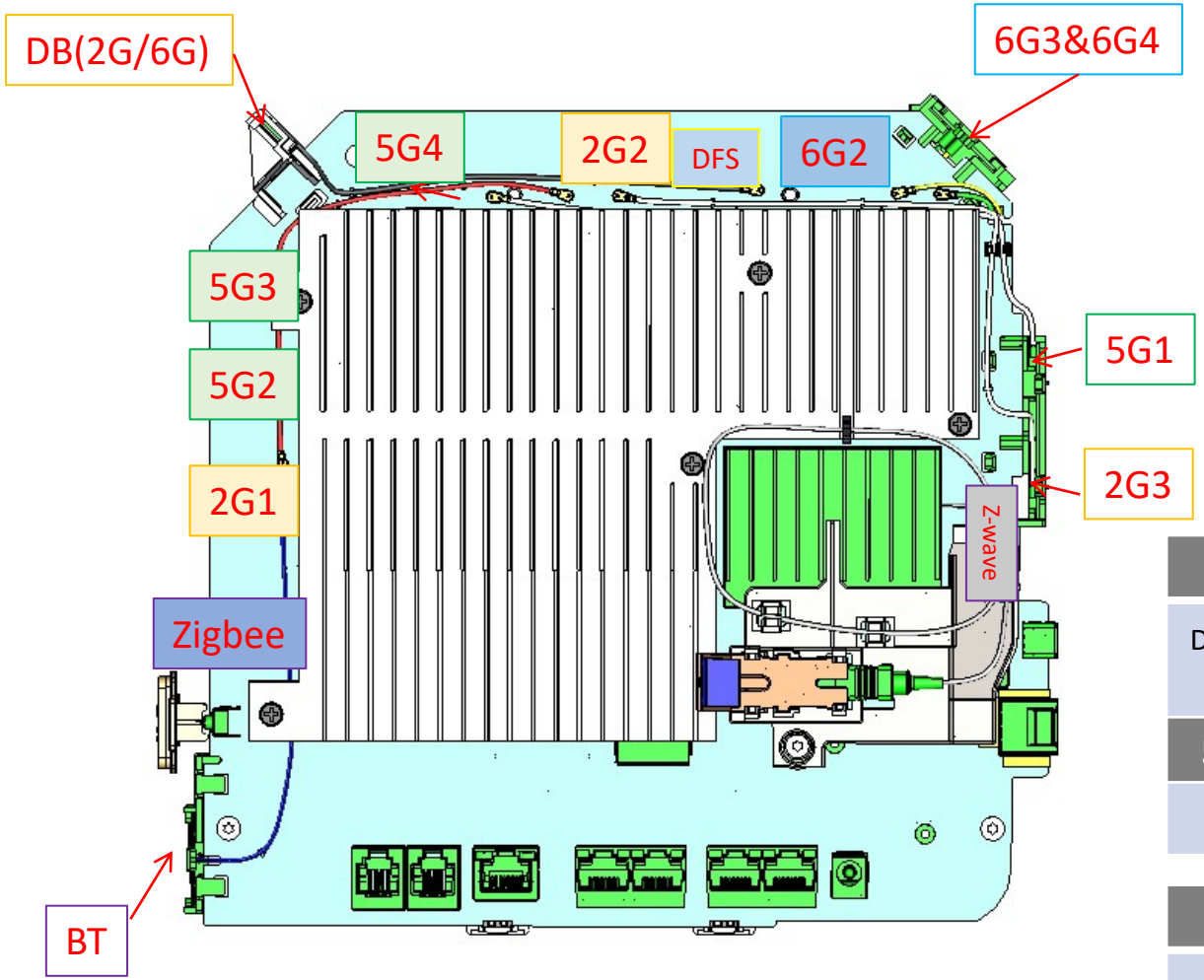

DB	2G1	2G2	2G3	5G1	5G2
Dipole	Dipole	Dipole	PIFA	Dipole	PIFA
5G3	**5G4**	**6G2**	**6G3**	**6G4**	
PIFA	PIFA	Dipole	Dipole	Dipole	

BT	Zigbee	DFS	Zwave
Dipole	Monopole	Monopole	PIFA

All rights reserved. Information in this leaflet is proprietary to Pegatron Corp.

Measurement data

- S-parameter : Return loss

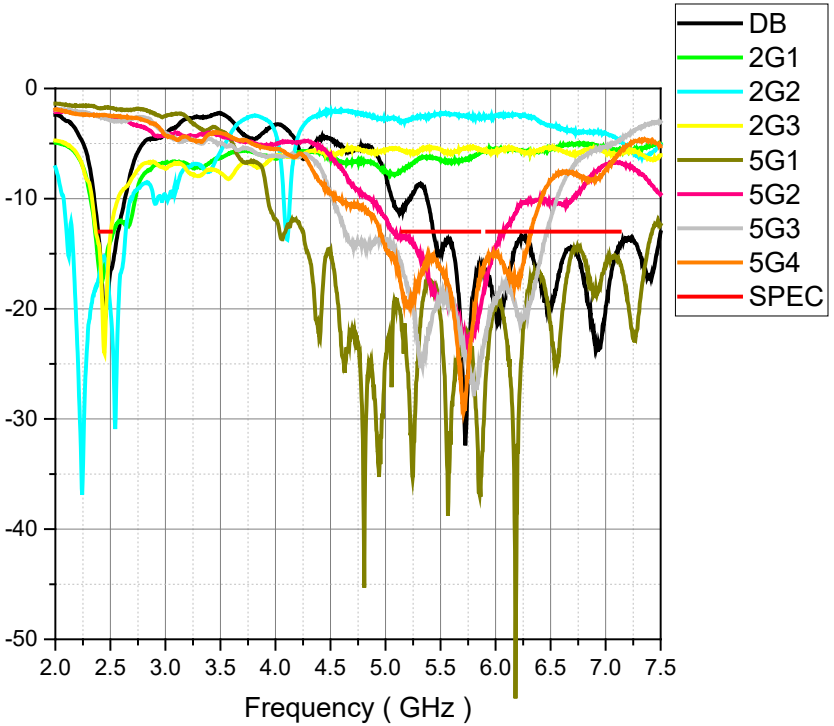

Frequency (MHz)	DB	2G1	2G2	2G3	5G1	5G2	5G3	5G4
2400	-13.91	-16.62	-16.97	-14.34	-	-	-	-
2450	-20.27	-16.30	-15.41	-24.01	-	-	-	-
2500	-16.60	-13.91	-19.96	-13.29	-	-	-	-
5150	-	-	-	-	-21.96	-13.50	-16.01	-18.23
5350	-	-	-	-	-18.85	-15.70	-24.89	-16.39
5500	-	-	-	-	-20.56	-18.70	-18.80	-16.28
5850	-	-	-	-	-36.61	-20.70	-25.28	-17.82
5925	-16.79	-	-	-	-	-	-	-
6125	-16.79	-	-	-	-	-	-	-
6500	-19.71	-	-	-	-	-	-	-
7125	-14.48	-	-	-	-	-	-	-

Unit:dB

CONFIDENTIAL

Measurement data

- S-parameter : Return loss

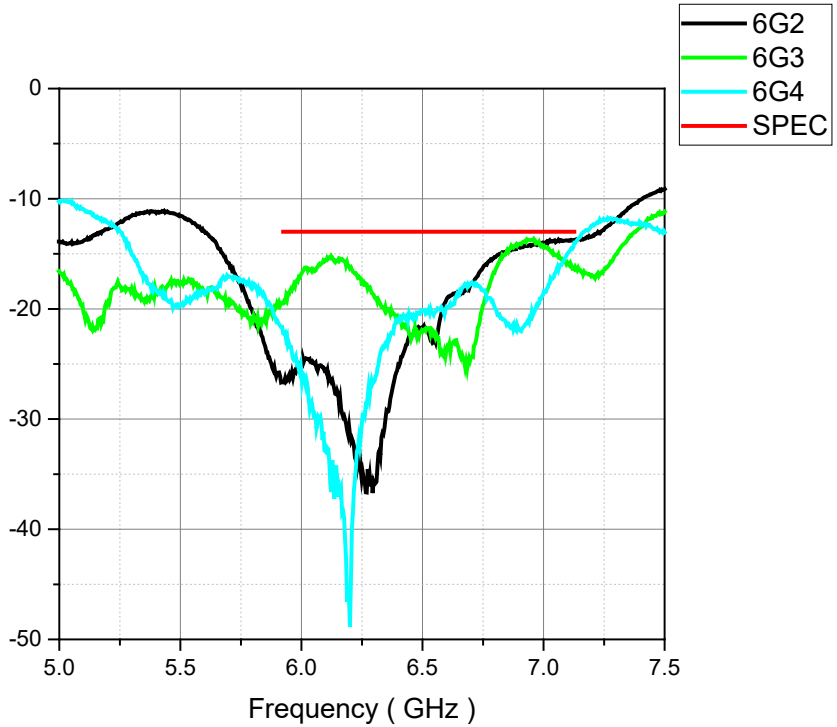

Frequency (MHz)	6G2	6G3	6G4
5925	-26.67	-19.48	-22.23
6125	-26.61	-15.20	-36.62
6500	-21.69	-21.92	-20.11
7125	-13.76	-16.30	-14.40

Unit:dB

Measurement data

- S-parameter : Return loss

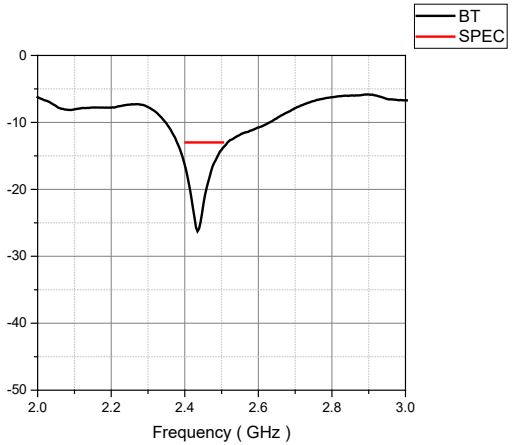

Frequency (MHz)	BT
2400	-16.00
2450	-23.60
2500	-13.80

Unit:dB

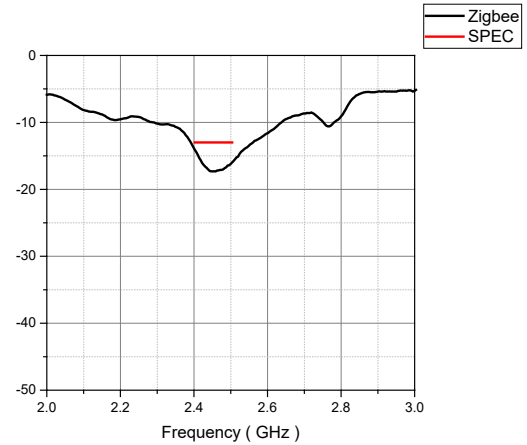

Frequency (MHz)	Zigbee
2400	-14.1
2450	-17.3
2500	-16.4

Unit:dB

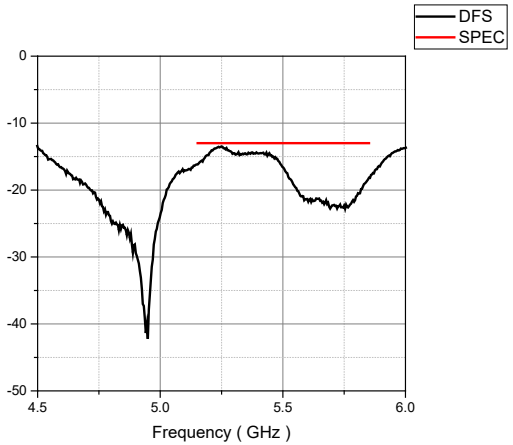

Frequency (MHz)	DFS
5150	-16.18
5350	-14.67
5500	-16.53
5850	-18.15

Unit:dB

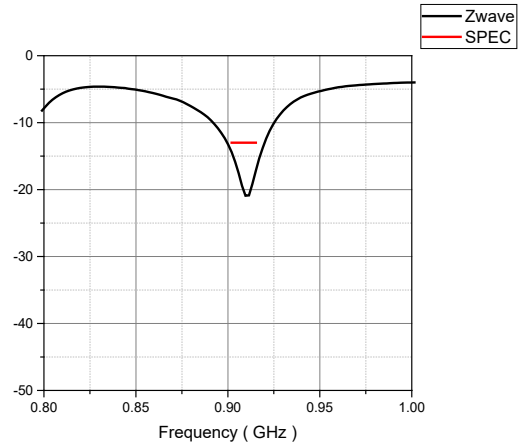

Frequency (MHz)	Zwave
902	-14.40
906	-17.53
912	-19.16
916	-17.18

Unit:dB

Measurement data

- S-parameter : Isolation

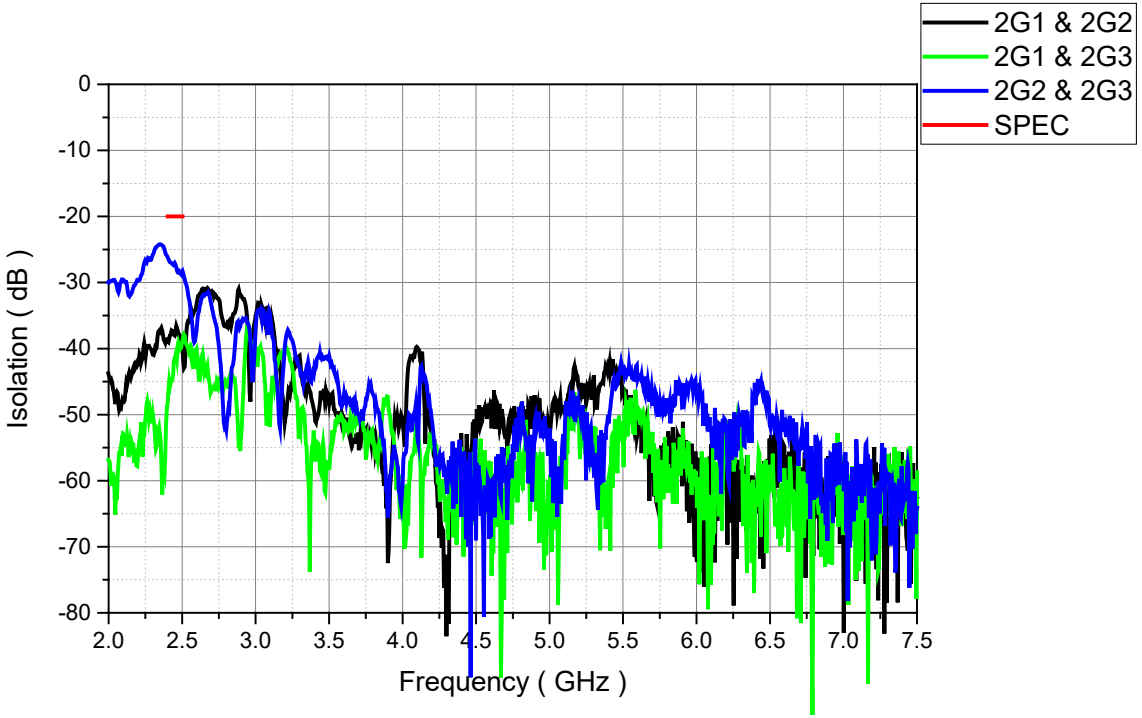

Frequency (MHz)	2G1 to 2G2	2G1 to 2G3	2G2 to 2G3
2400	-38.60	-48.91	-25.94
2450	-38.00	-41.48	-27.02
2500	-38.79	-39.36	-28.39

CONFIDENTIAL

Measurement data

- S-parameter : Isolation

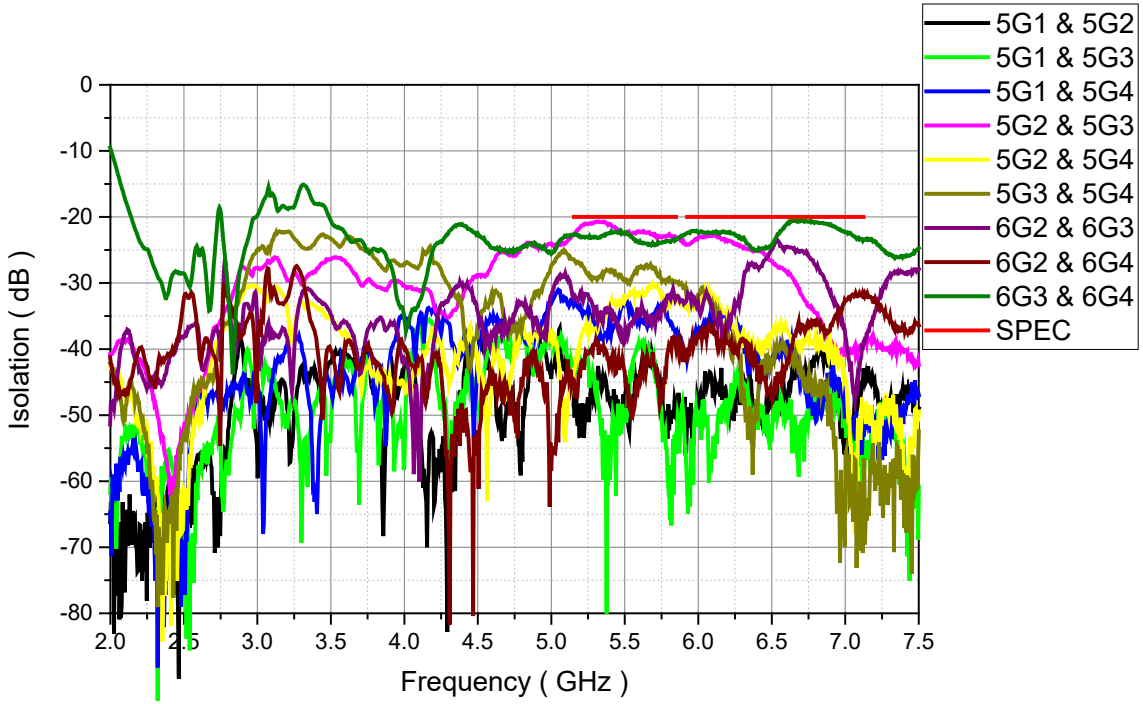

Frequency (MHz)	5G1 to 5G2	5G1 to 5G3	5G1 to 5G4	5G2 to 5G3	5G2 to 5G4	5G3 to 5G4
5150	-47.00	-43.50	-32.94	-22.80	-44.41	-26.42
5350	-44.35	-58.21	-38.47	-20.80	-35.48	-29.01
5500	-47.34	-50.57	-33.12	-22.40	-32.67	-29.65
5850	-49.73	-52.60	-37.52	-23.10	-32.22	-29.76

Frequency (MHz)	6G2 to 6G3	6G2 to 6G4	6G3 to 6G4
5925	-32.16	-41.80	-22.40
6125	-35.81	-37.71	-22.20
6500	-24.84	-47.89	-24.40
7125	-38.94	-31.92	-23.40

Measurement data

- S-parameter : Isolation

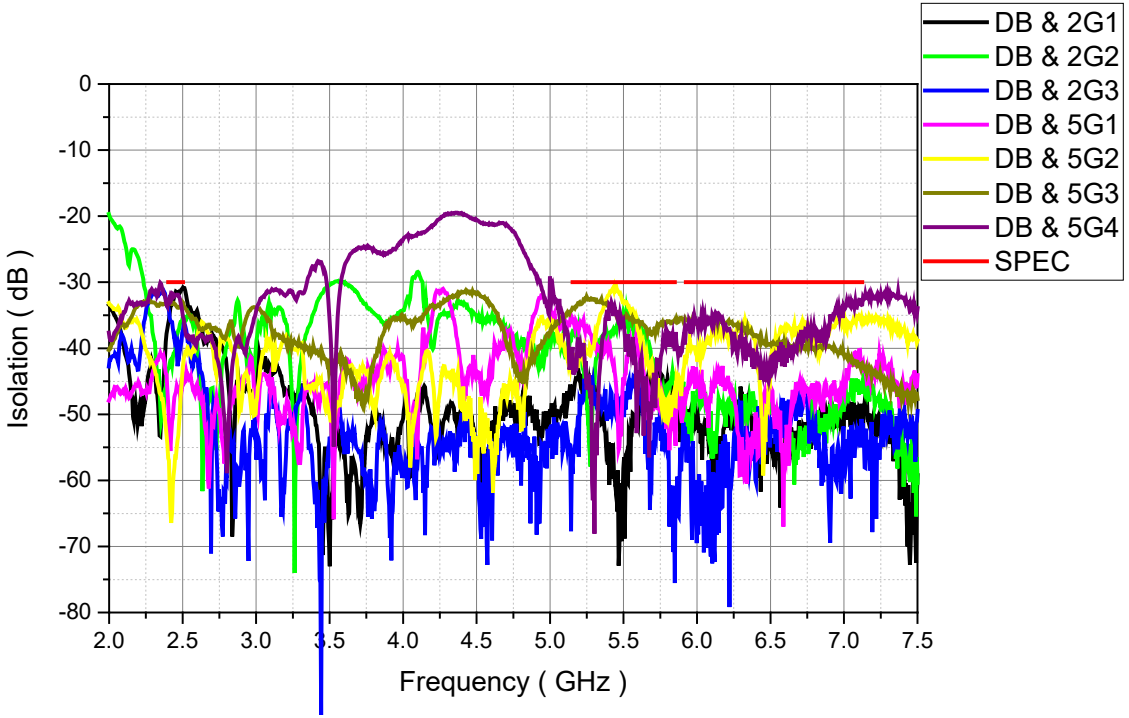

Frequency (MHz)	DB to 2G1	DB to 2G2	DB to 2G3	DB to 5G1	DB to 5G2	DB to 5G3	DB to 5G4
2400	-37.00	-43.30	-33.72	-46.42	-54.70	-33.12	-33.72
2450	-31.80	-40.62	-38.15	-46.97	-56.43	-33.33	-32.08
2500	-31.00	-35.70	-37.63	-45.76	-43.98	-32.92	-34.42
5150	-46.30	-37.83	-57.14	-35.35	-41.26	-34.15	-40.78
5350	-51.40	-38.29	-47.91	-41.66	-34.63	-32.52	-40.42
5500	-58.20	-34.80	-47.34	-44.42	-32.89	-35.33	-35.75
5850	-46.80	-45.41	-75.53	-52.88	-48.72	-35.66	-40.43
5925	-49.80	-50.58	-54.59	-45.86	-41.18	-35.75	-37.46
6125	-58.20	-52.57	-72.33	-46.05	-37.39	-36.04	-34.93
6500	-54.50	-47.98	-55.00	-46.57	-44.95	-39.45	-43.88
7125	-51.20	-45.12	-53.31	-42.30	-35.87	-42.23	-33.40

CONFIDENTIAL

Measurement data

- S-parameter : Isolation

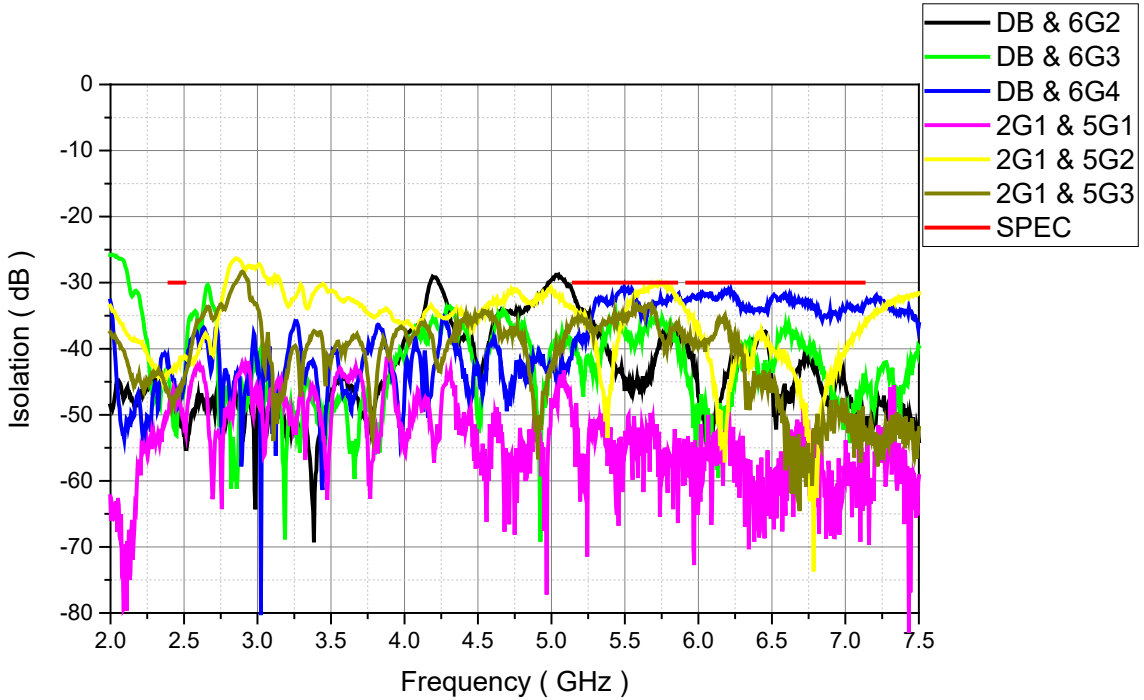

Frequency (MHz)	DB to 6G2	DB to 6G3	DB to 6G4	2G1 to 5G1	2G1 to 5G2	2G1 to 5G3
2400	-47.20	-45.36	-42.79	-48.25	-43.50	-47.39
2450	-49.50	-50.80	-48.37	-47.38	-42.40	-46.17
2500	-52.70	-44.90	-45.48	-51.90	-41.30	-44.35
5150	-32.10	-40.99	-38.77	-50.62	-34.00	-36.09
5350	-38.70	-39.49	-32.48	-50.45	-46.10	-35.97
5500	-44.50	-36.98	-31.01	-52.43	-34.30	-35.47
5850	-38.20	-39.10	-32.01	-56.41	-32.00	-36.46
5925	-40.00	-44.21	-32.42	-59.49	-34.50	-38.83
6125	-49.20	-56.00	-32.59	-56.47	-46.90	-37.26
6500	-46.00	-41.95	-32.14	-59.69	-40.10	-44.54
7125	-51.20	-43.77	-33.69	-55.65	-36.50	-54.02

CONFIDENTIAL

Measurement data

- S-parameter : Isolation

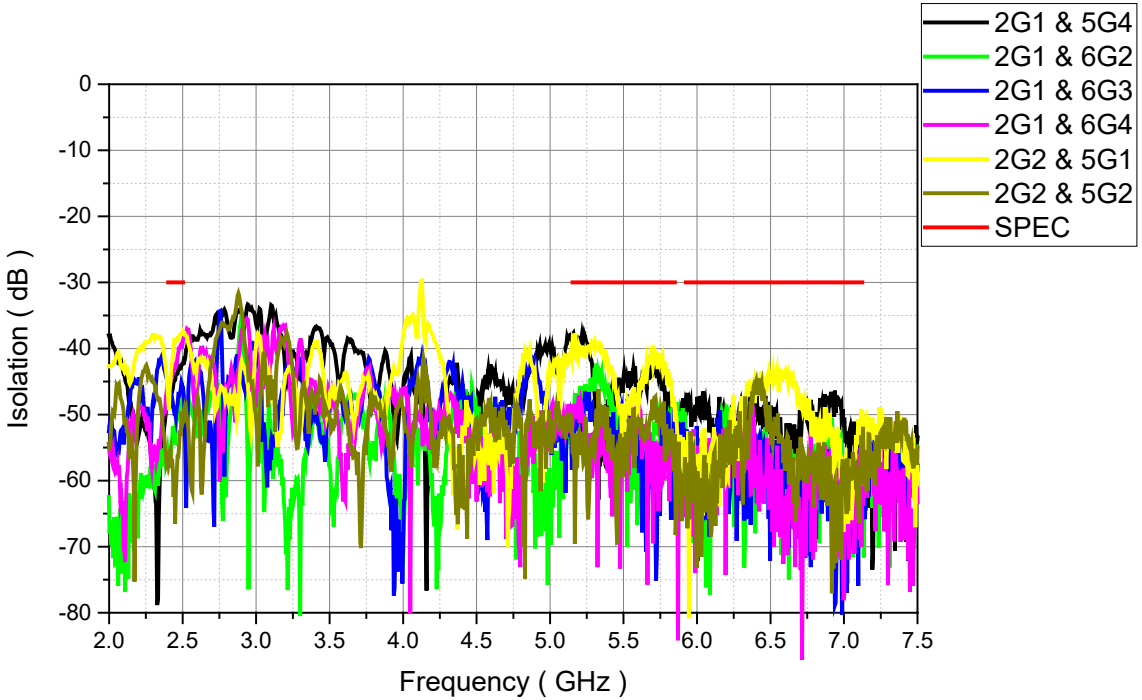

Frequency (MHz)	2G1 to 5G4	2G1 to 6G2	2G1 to 6G3	2G1 to 6G4	2G2 to 5G1	2G2 to 5G2
2400	-47.25	-56.90	-45.88	-45.39	-47.76	-57.59
2450	-43.91	-51.52	-50.47	-42.70	-38.88	-61.58
2500	-42.30	-48.01	-45.84	-38.71	-37.35	-50.57
5150	-37.85	-52.39	-51.32	-51.63	-38.99	-55.68
5350	-51.96	-43.63	-53.21	-49.52	-40.32	-49.76
5500	-43.57	-57.33	-48.45	-56.35	-54.58	-53.43
5850	-59.47	-52.06	-53.55	-59.77	-49.51	-68.23
5925	-47.87	-54.36	-55.78	-62.57	-54.78	-62.32
6125	-54.68	-58.89	-59.06	-52.70	-53.90	-55.55
6500	-48.65	-55.82	-59.65	-55.79	-44.04	-54.51
7125	-60.06	-54.04	-59.43	-56.45	-51.68	-57.65

CONFIDENTIAL

Measurement data

- S-parameter : Isolation

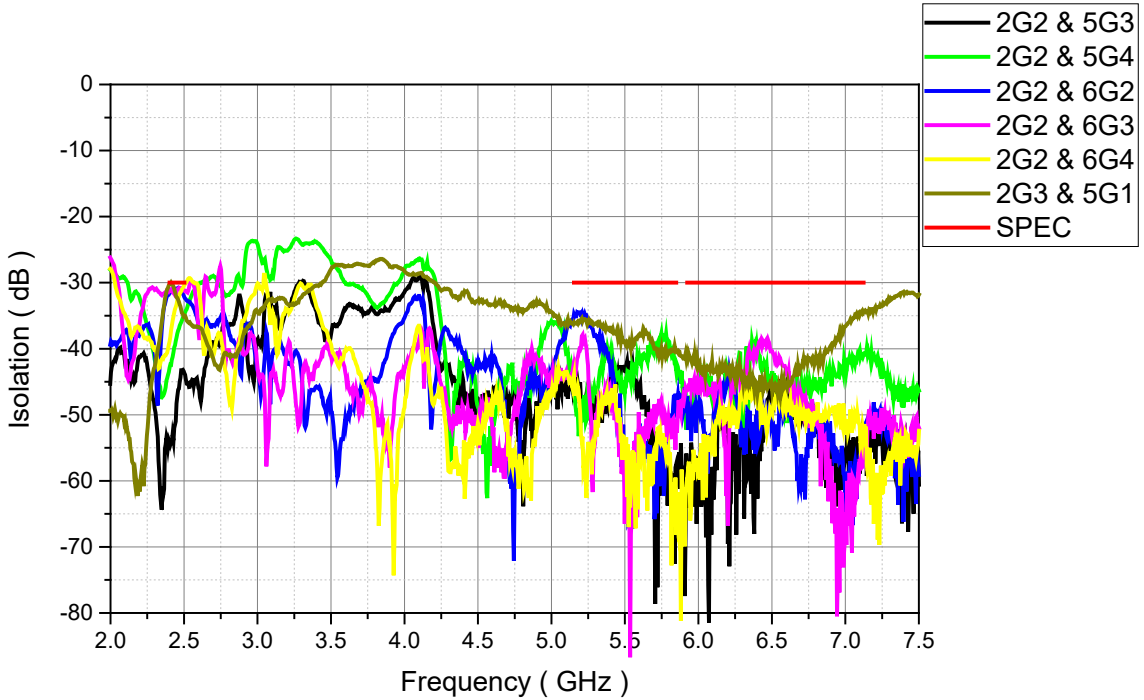

Frequency (MHz)	2G2 to 5G3	2G2 to 5G4	2G2 to 6G2	2G2 to 6G3	2G2 to 6G4	2G3 to 5G1
2400	-54.09	-42.87	-31.60	-31.10	-38.90	-30.20
2450	-47.27	-37.72	-30.90	-31.10	-32.70	-32.30
2500	-43.70	-34.73	-32.20	-31.20	-30.30	-35.00
5150	-44.88	-46.89	-34.80	-43.20	-43.90	-36.00
5350	-48.02	-43.15	-38.80	-47.10	-48.00	-36.50
5500	-43.45	-45.02	-65.30	-56.10	-56.40	-39.30
5850	-58.31	-42.36	-48.20	-52.70	-63.20	-40.40
5925	-60.93	-48.54	-47.20	-46.30	-59.50	-40.80
6125	-56.16	-47.36	-48.30	-45.70	-51.00	-43.50
6500	-44.76	-43.40	-51.00	-40.40	-49.70	-46.40
7125	-53.00	-40.91	-53.20	-54.40	-52.70	-34.50

CONFIDENTIAL

Measurement data

- S-parameter : Isolation

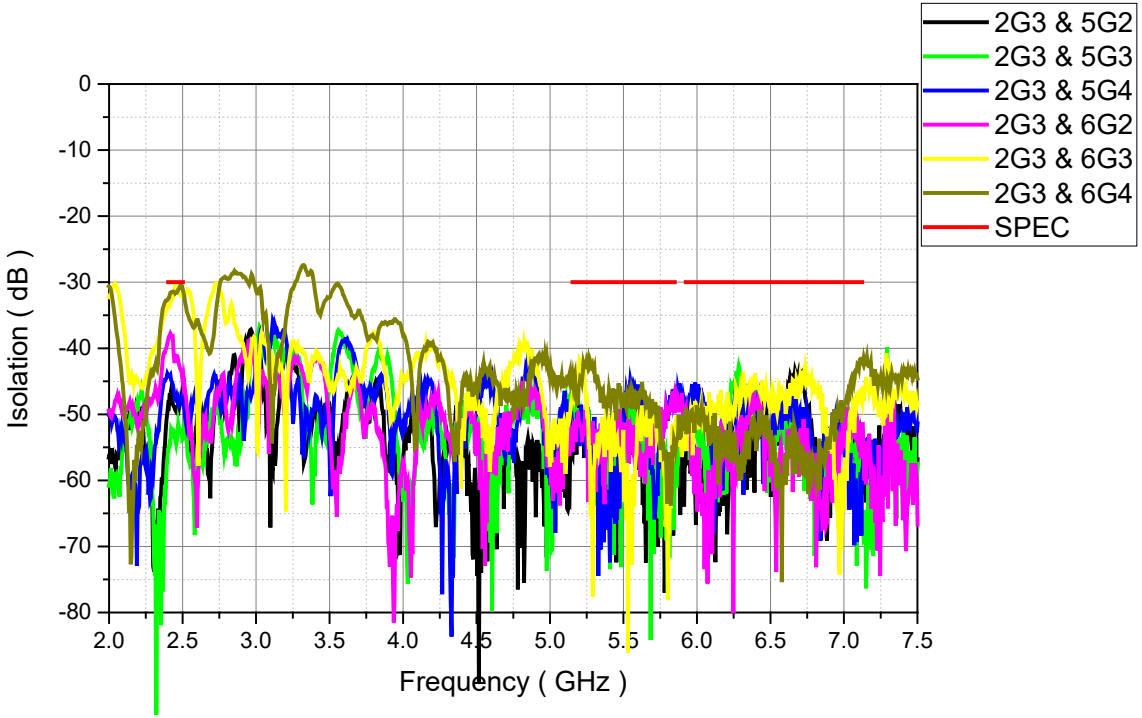

Frequency (MHz)	2G3 to 5G2	2G3 to 5G3	2G3 to 5G4	2G3 to 6G2	2G3 to 6G3	2G3 to 6G4
2400	-48.59	-55.35	-44.10	-38.67	-33.50	-32.50
2450	-49.49	-52.51	-47.87	-41.09	-30.72	-31.60
2500	-47.85	-53.57	-48.47	-45.25	-31.93	-31.20
5150	-56.34	-49.80	-51.43	-55.66	-47.05	-44.20
5350	-54.42	-54.82	-56.47	-55.59	-52.83	-47.20
5500	-53.39	-54.27	-48.75	-56.86	-63.28	-47.60
5850	-57.10	-53.65	-46.41	-48.16	-54.95	-55.30
5925	-57.55	-51.19	-48.24	-48.88	-53.86	-49.00
6125	-67.15	-58.26	-65.22	-62.83	-49.09	-49.80
6500	-62.50	-53.92	-55.55	-55.06	-47.76	-52.40
7125	-62.00	-68.10	-58.47	-52.44	-48.01	-42.00

CONFIDENTIAL

Measurement data

- S-parameter : Isolation

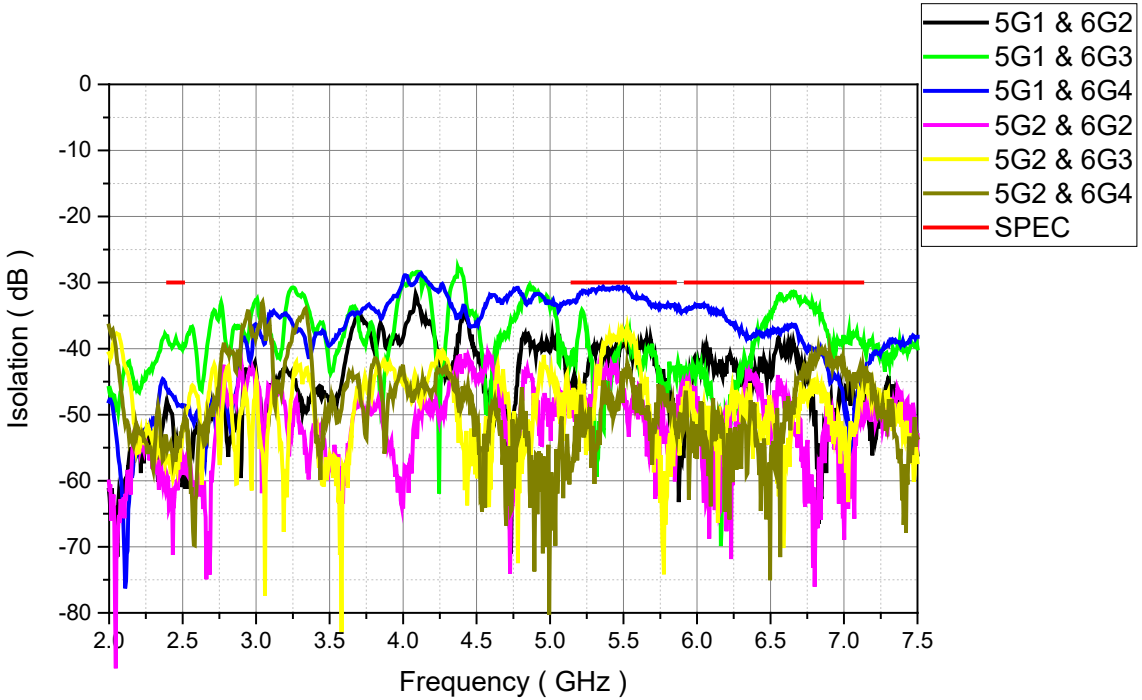

Frequency (MHz)	5G1 to 6G2	5G1 to 6G3	5G1 to 6G4	5G2 to 6G2	5G2 to 6G3	5G2 to 6G4
5150	-48.79	-40.31	-32.80	-48.61	-49.23	-57.60
5350	-40.67	-49.74	-31.00	-44.05	-40.75	-48.85
5500	-39.54	-37.78	-30.80	-46.06	-37.81	-43.80
5850	-51.32	-43.57	-33.40	-57.12	-52.65	-52.21
5925	-51.48	-44.42	-34.00	-45.09	-48.52	-46.38
6125	-43.47	-54.44	-34.40	-64.44	-53.28	-54.01
6500	-43.53	-34.76	-37.40	-53.62	-48.40	-56.01
7125	-46.68	-39.55	-43.70	-48.43	-46.32	-44.37

CONFIDENTIAL

Measurement data

- S-parameter : Isolation

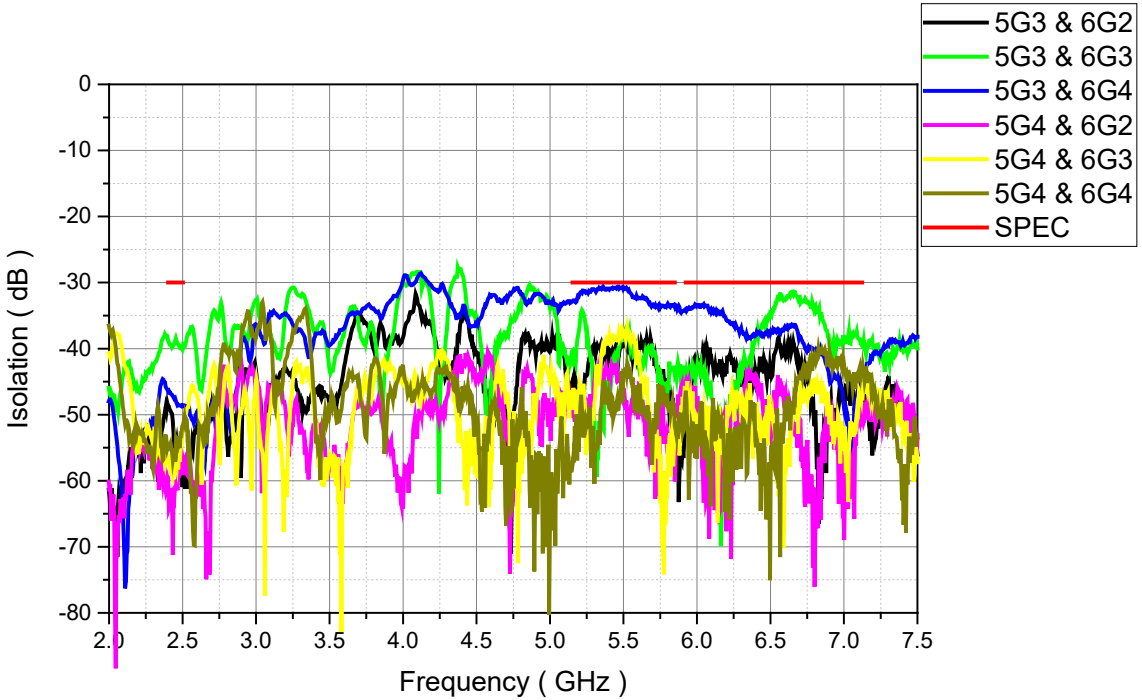

Frequency (MHz)	5G3 to 6G2	5G3 to 6G3	5G3 to 6G4	5G4 to 6G2	5G4 to 6G3	5G4 to 6G4
5150	-45.95	-49.81	-43.85	-37.69	-36.04	-33.91
5350	-74.56	-45.92	-37.79	-34.40	-33.75	-36.67
5500	-46.83	-41.84	-40.88	-37.59	-35.95	-36.28
5850	-40.39	-52.23	-40.69	-39.20	-38.46	-41.34
5925	-39.32	-53.39	-45.04	-38.43	-42.66	-41.25
6125	-52.97	-48.53	-42.53	-39.40	-38.42	-44.10
6500	-44.75	-46.09	-48.58	-36.53	-37.41	-43.48
7125	-52.25	-53.85	-53.81	-39.77	-43.87	-54.12

CONFIDENTIAL

Measurement data

- S-parameter : Isolation

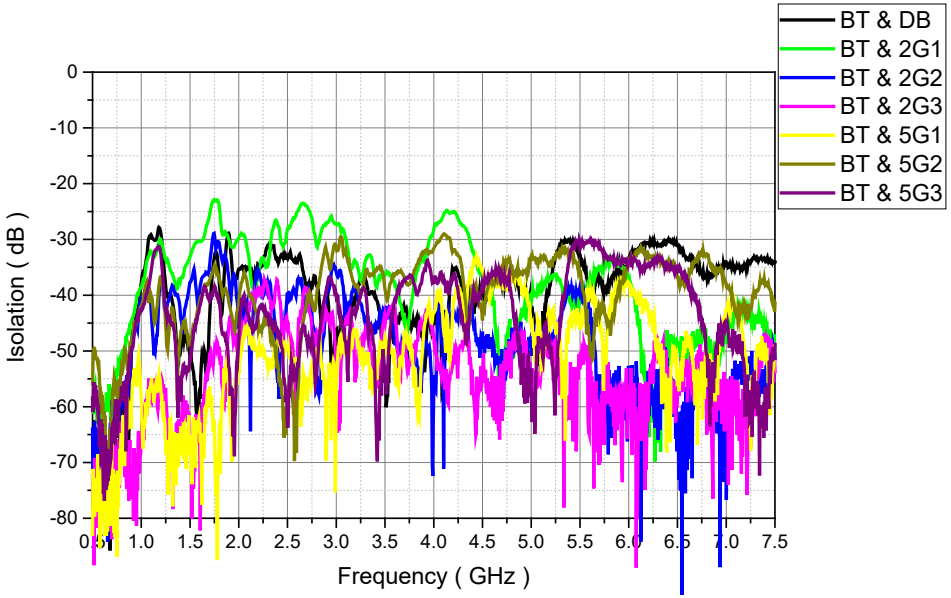

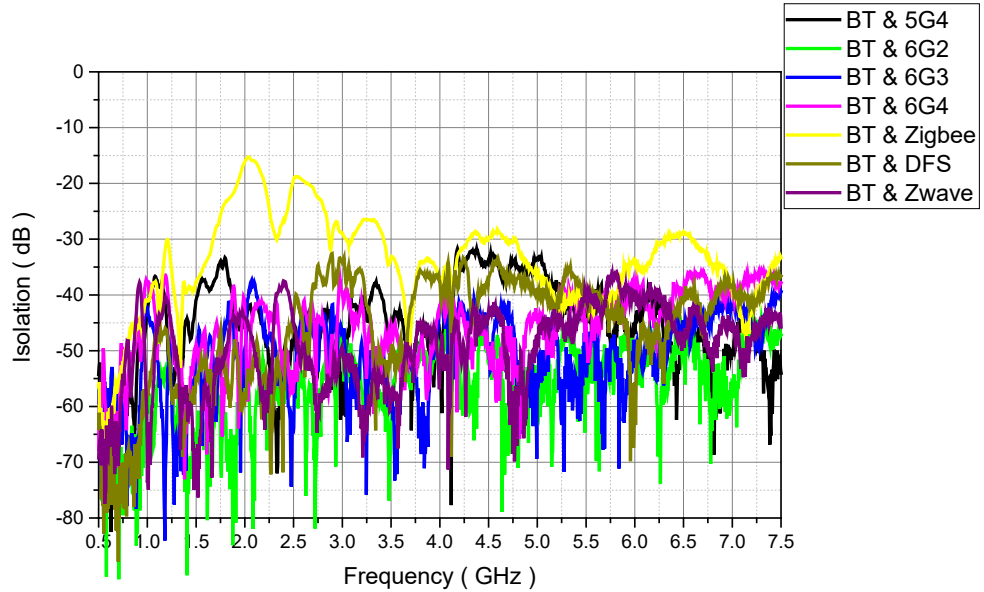

Measurement data

- S-parameter : Isolation

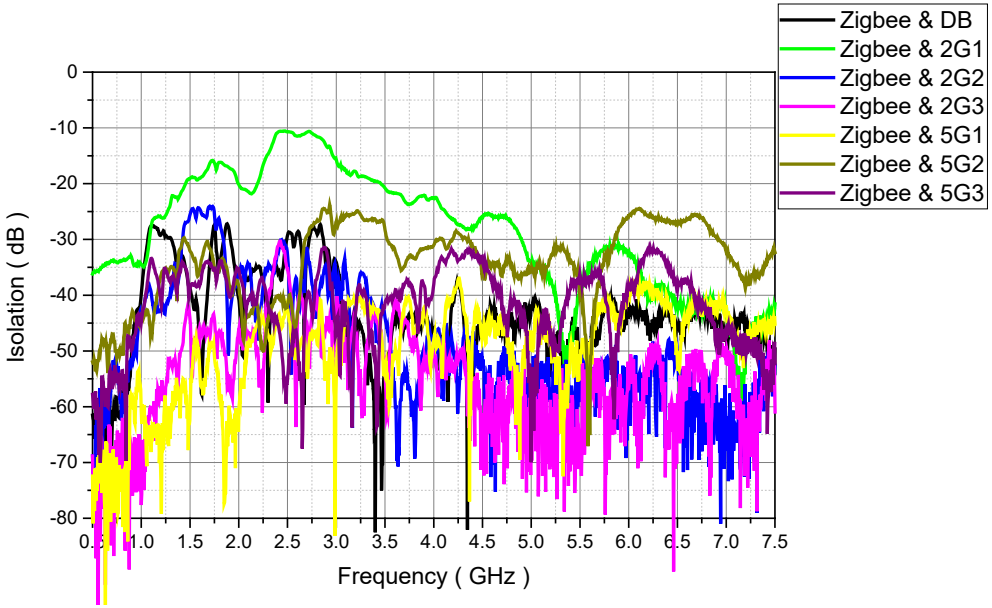

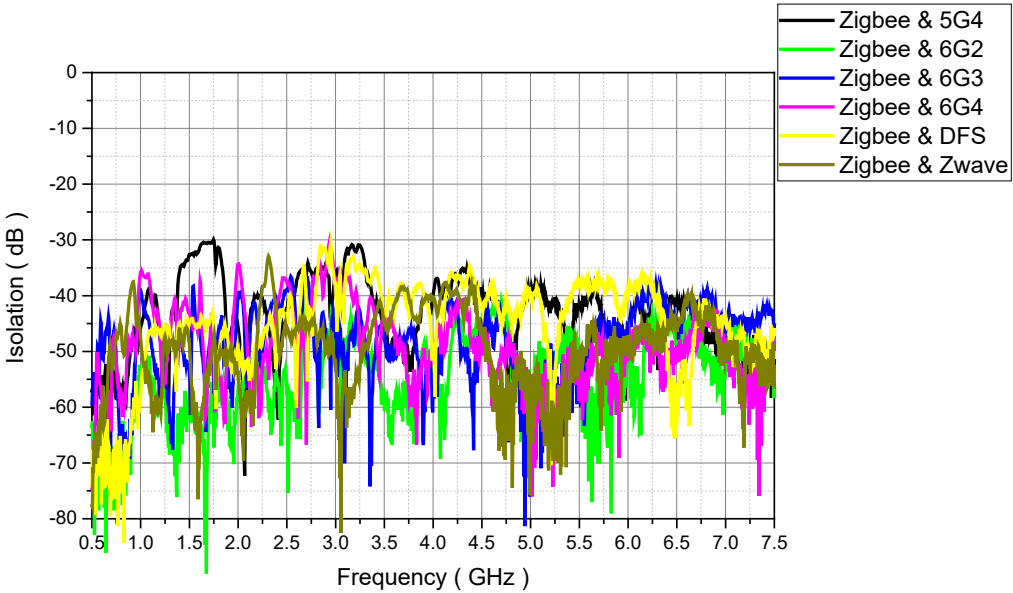

CONFIDENTIAL

Measurement data

- S-parameter : Isolation

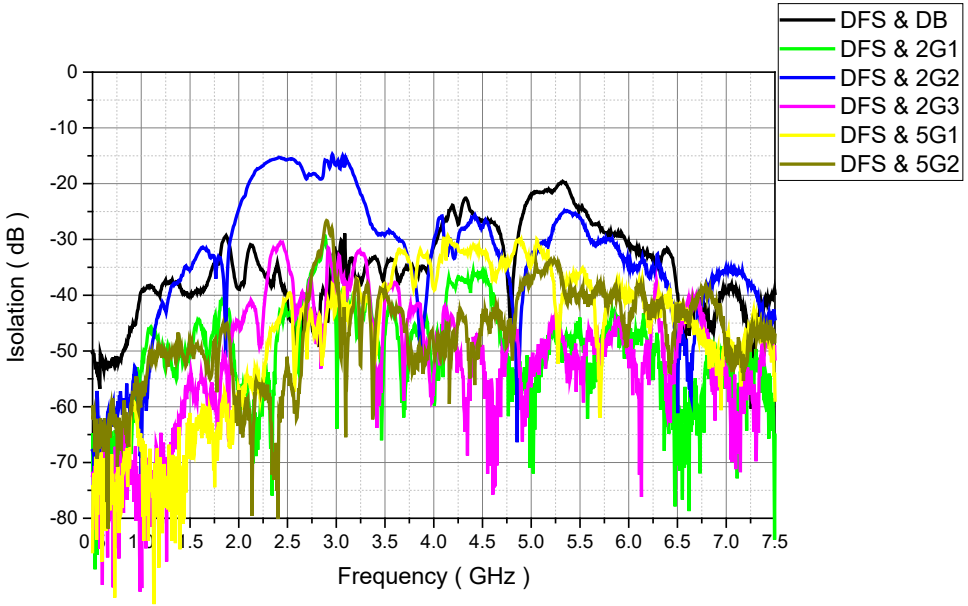

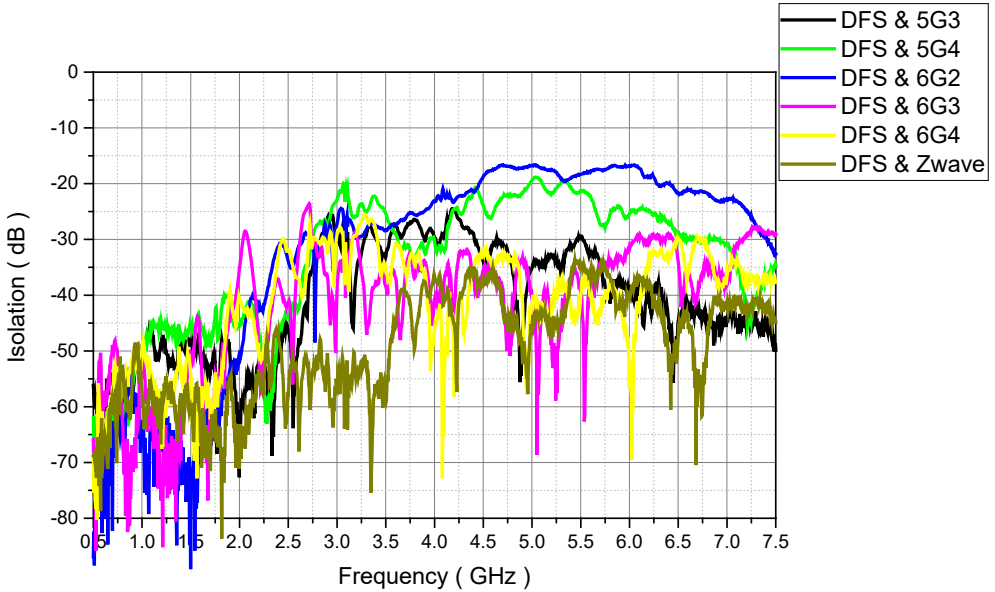

Measurement data

- S-parameter : Isolation

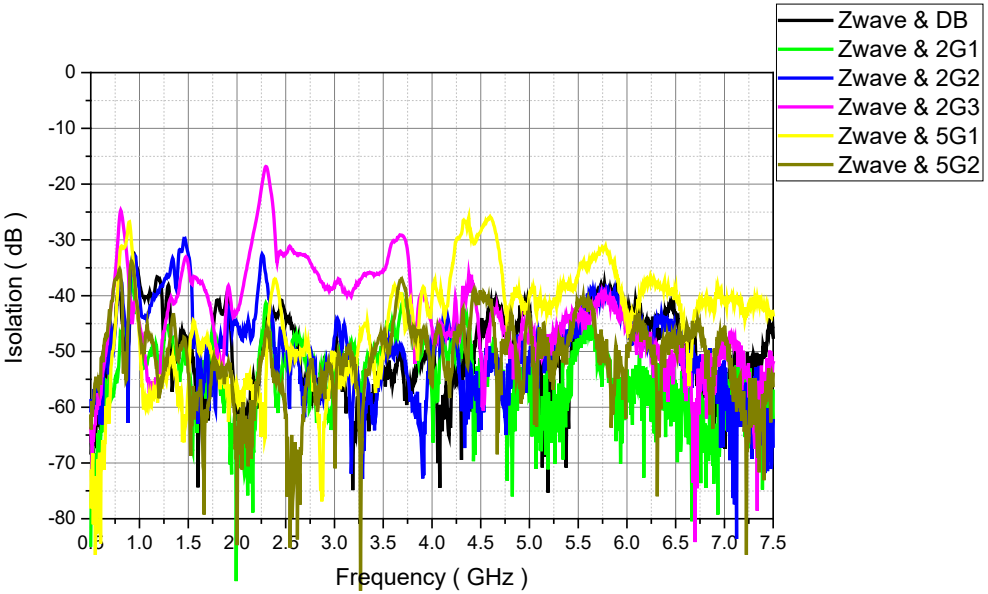

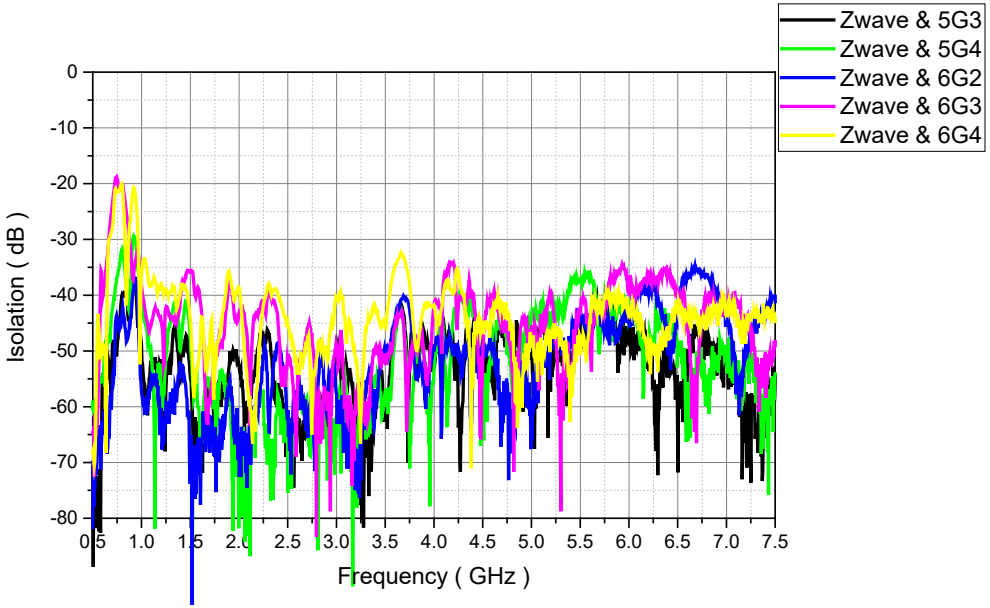

Measurement data

Radiation pattern – 2.45G

X-Z plane	Y-Z plane	X-Y plane
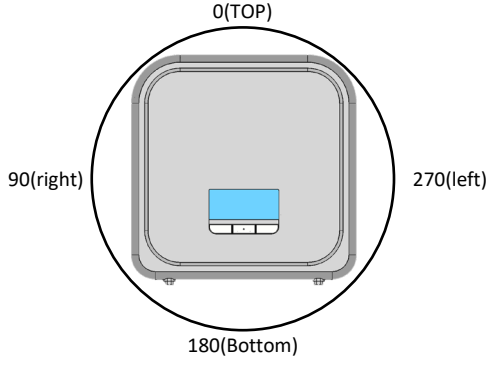	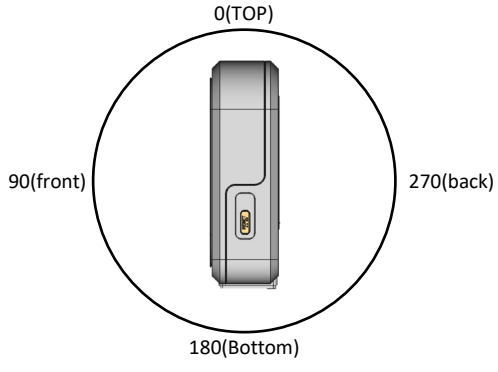	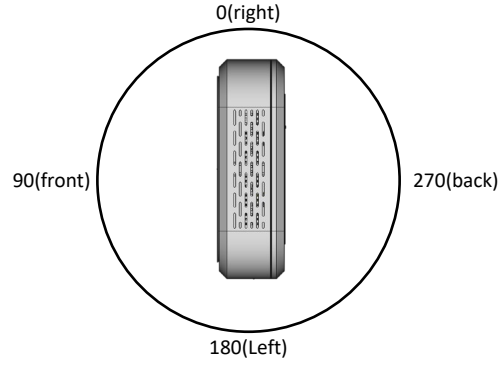
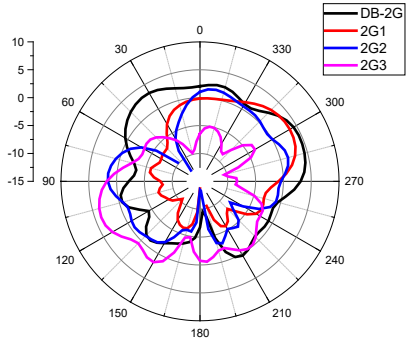	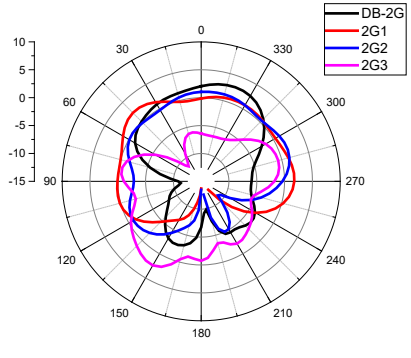	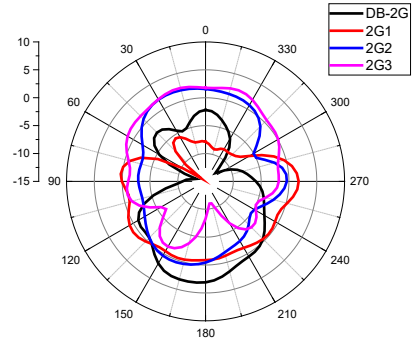

Measurement data

Radiation pattern – 5G

X-Z plane	Y-Z plane	X-Y plane
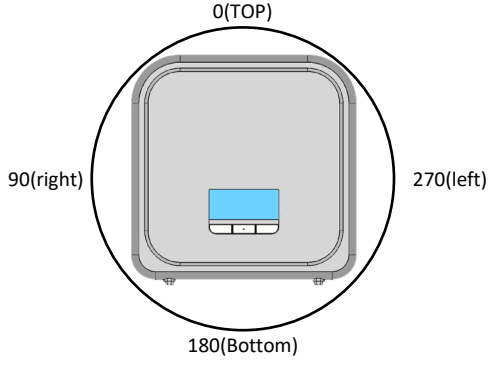	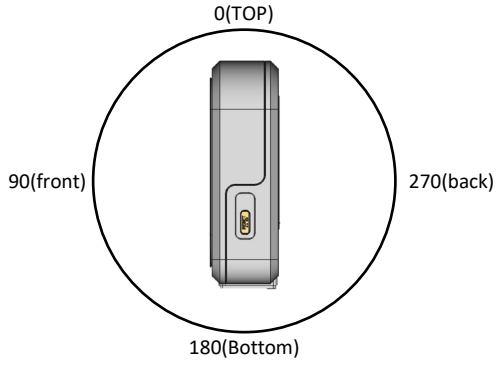	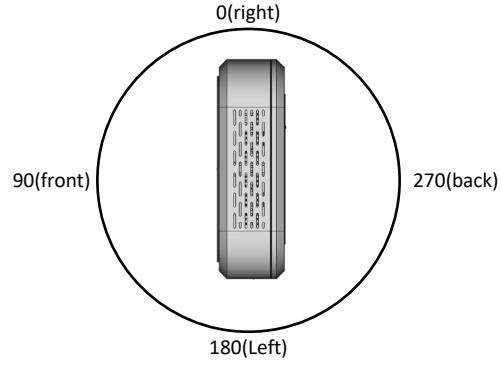
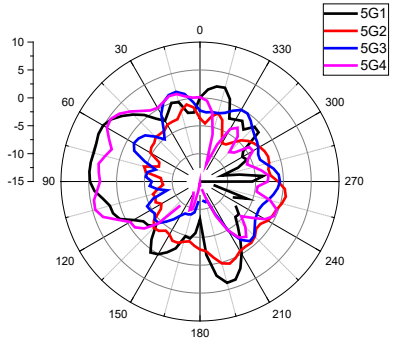	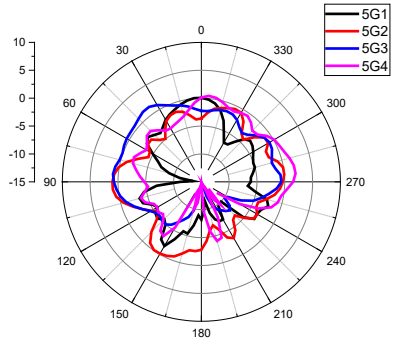	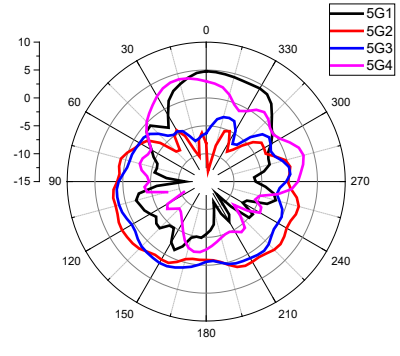

Measurement data

Radiation pattern – 6G

X-Z plane	Y-Z plane	X-Y plane
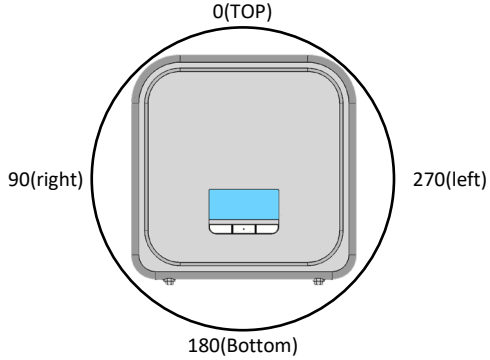	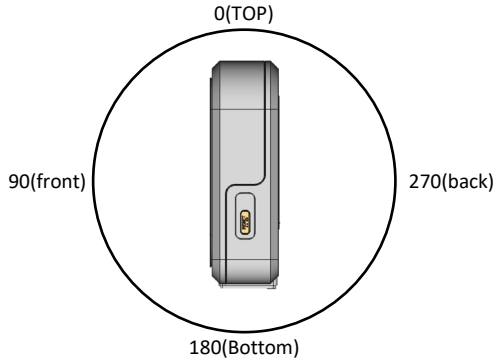	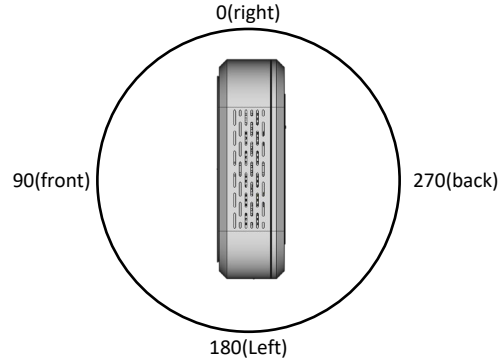
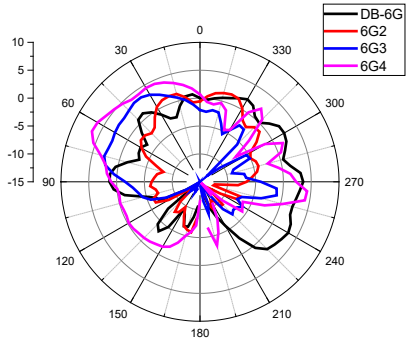	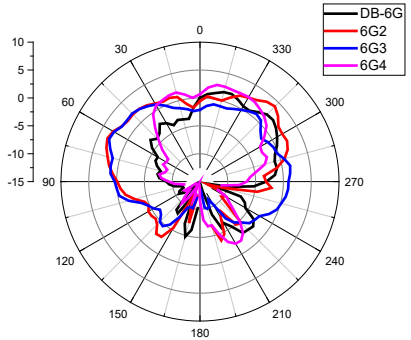	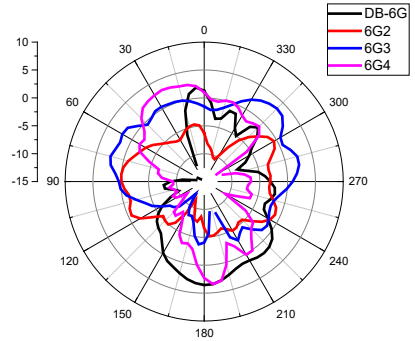

Measurement data

Radiation pattern – BT

X-Z plane	Y-Z plane	X-Y plane
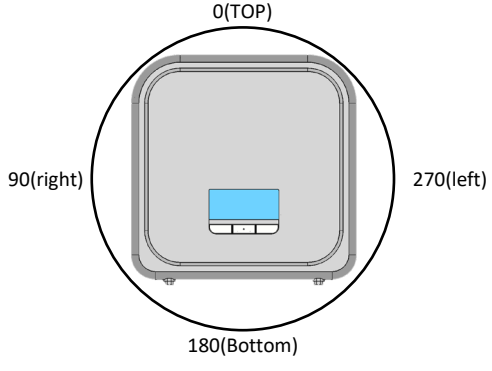	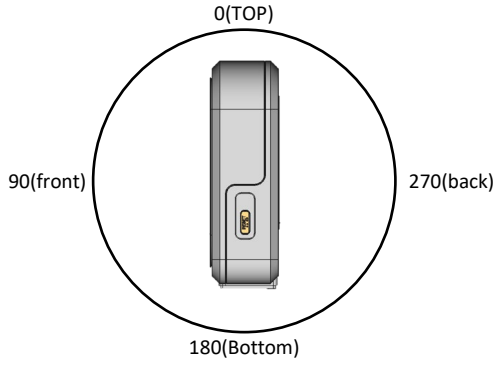	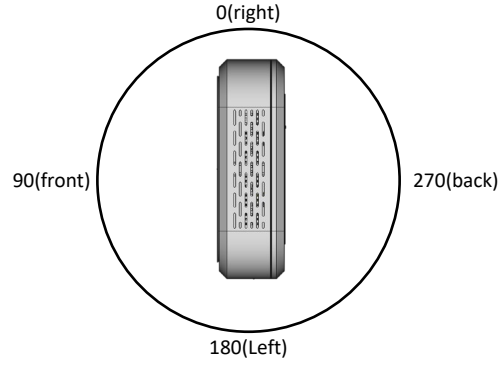
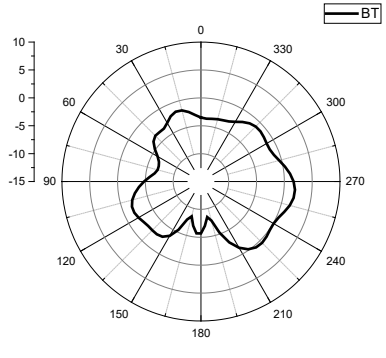	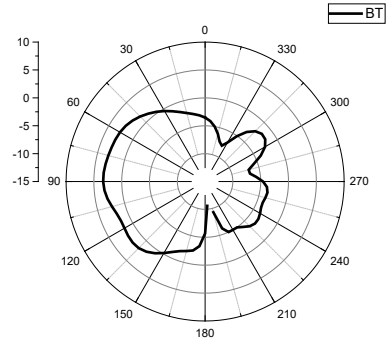	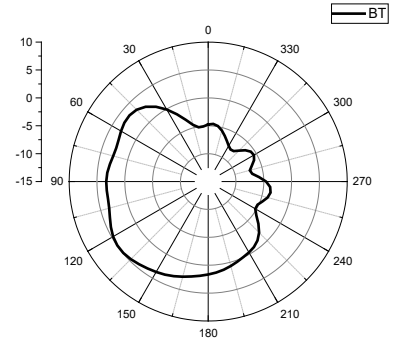

Measurement data

Radiation pattern – Zigbee

X-Z plane	Y-Z plane	X-Y plane
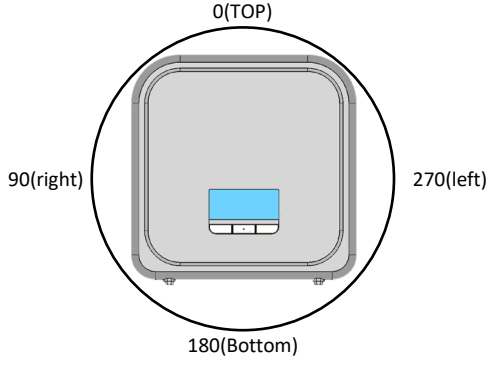	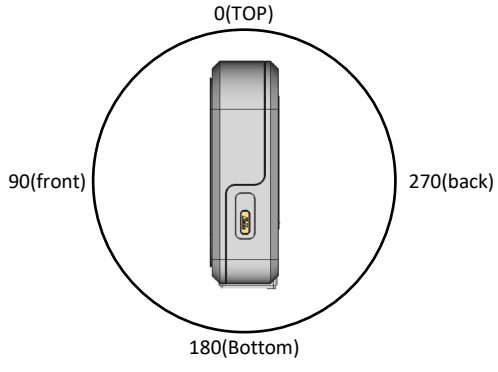	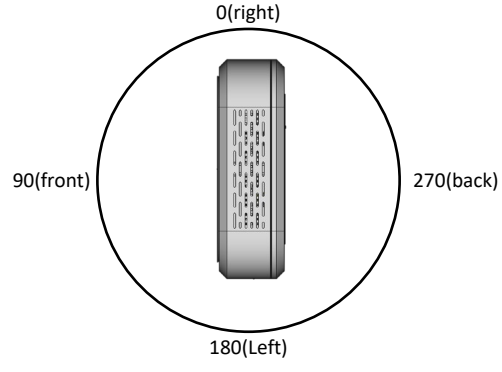
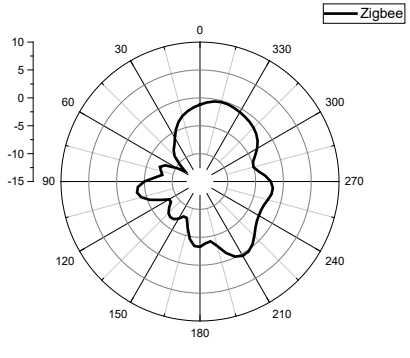	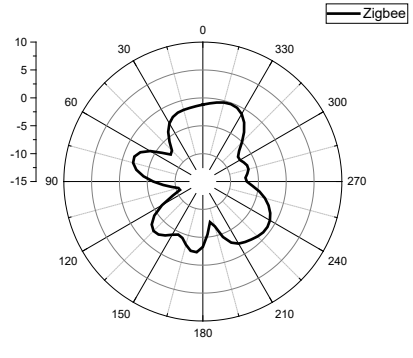	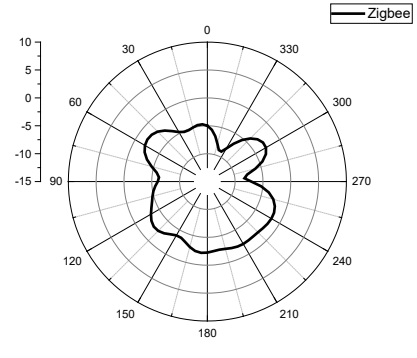

Measurement data

Radiation pattern – DFS

X-Z plane	Y-Z plane	X-Y plane
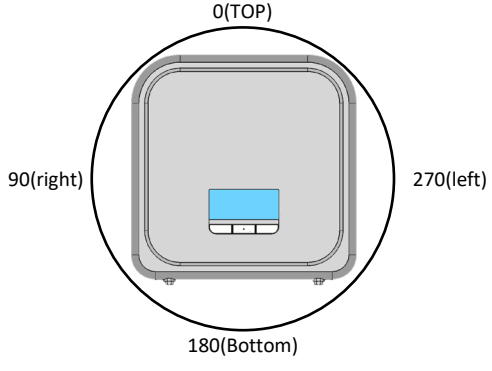	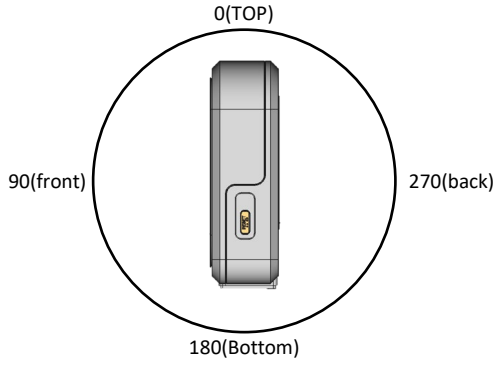	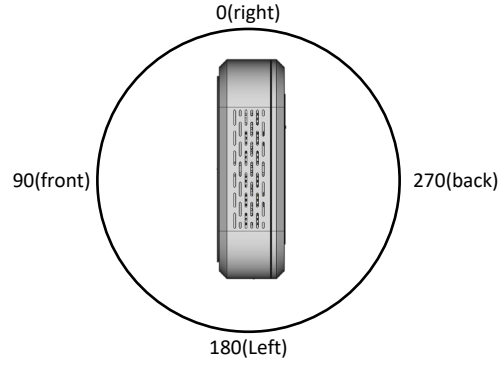
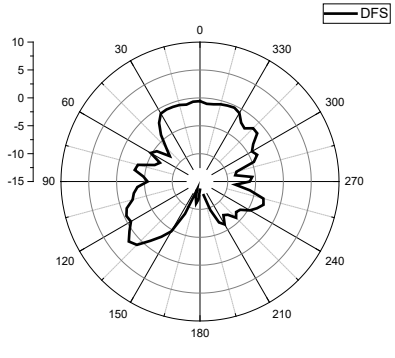	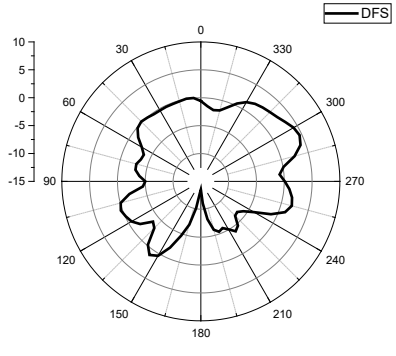	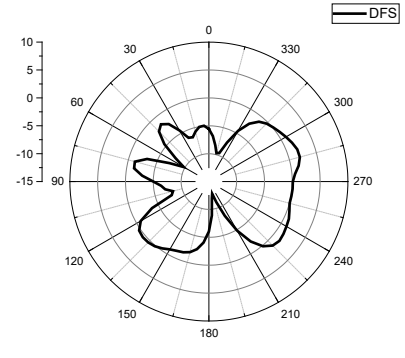

Measurement data

Radiation pattern – Zwave

X-Z plane	Y-Z plane	X-Y plane
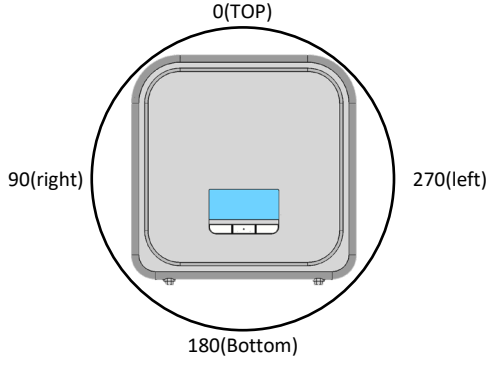	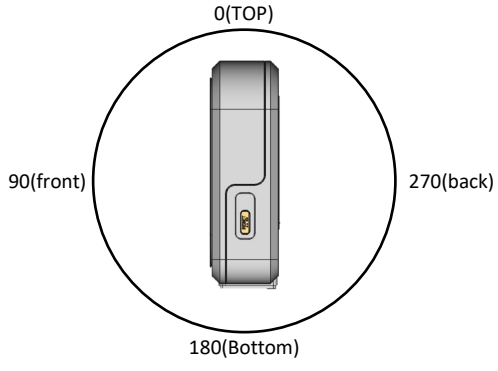	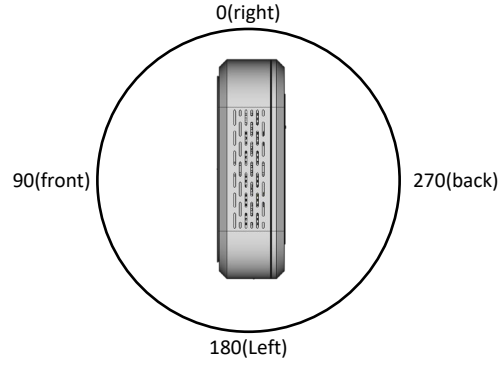
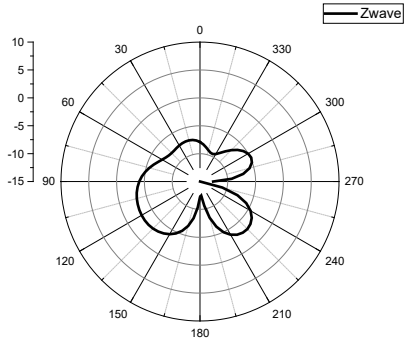	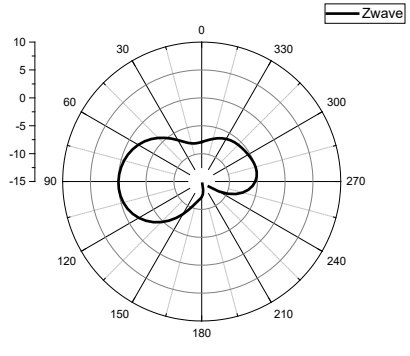	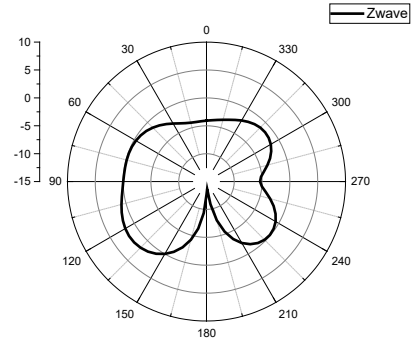

Measurement data

- Gain table 2G

Frequency (MHz)	DB(2G)		2G1		2G2		2G3	
	Phi (dBi)	Theta (dBi)	Phi (dBi)	Theta (dBi)	Phi (dBi)	Theta (dBi)	Phi (dBi)	Theta (dBi)
2400	3.79	2.80	-2.68	3.36	0.92	0.78	-0.11	2.93
2450	4.53	2.87	0.04	3.50	1.25	1.33	-0.89	3.62
2500	4.59	2.77	-0.42	2.74	1.67	2.28	-1.44	3.06

All rights reserved. Information in this leaflet is proprietary to Pegatron Corp.

Measurement data

- Gain table 5G

Frequency (MHz)	5G1		5G2		5G3		5G4	
	Phi (dBi)	Theta (dBi)	Phi (dBi)	Theta (dBi)	Phi (dBi)	Theta (dBi)	Phi (dBi)	Theta (dBi)
5150	4.78	0.84	-0.64	4.31	2.73	2.44	-0.30	5.45
5350	5.62	1.74	0.49	4.48	0.57	3.08	-0.05	4.44
5500	4.99	1.02	0.23	3.27	1.61	1.31	0.89	5.12
5850	5.19	1.45	-0.56	4.69	1.86	2.80	2.62	4.51

All rights reserved. Information in this leaflet is proprietary to Pegatron Corp.

Measurement data

- Gain table 6G

Frequency (MHz)	DB(6G)		6G2		6G3		6G4	
	Phi (dBi)	Theta (dBi)	Phi (dBi)	Theta (dBi)	Phi (dBi)	Theta (dBi)	Phi (dBi)	Theta (dBi)
5925	4.75	-0.05	3.54	2.09	1.87	4.23	5.93	2.77
6125	4.57	0.71	4.39	3.22	1.71	3.87	5.26	4.10
6500	3.73	0.89	4.05	1.65	3.07	4.30	6.84	3.29
7125	4.08	1.72	3.71	2.35	2.99	3.50	5.00	3.05

All rights reserved. Information in this leaflet is proprietary to Pegatron Corp.

Measurement data

- Gain table

Frequency (MHz)	DFS	
	Phi (dBi)	Theta (dBi)
5150	1.56	3.81
5350	1.79	3.27
5500	1.47	3.01
5850	2.15	2.49

Frequency (MHz)	Z-wave	
	Phi (dBi)	Theta (dBi)
902	1.47	0.21
908	1.37	-0.32
916	0.98	-1.01

Frequency (MHz)	Zigbee		BT	
	Phi (dBi)	Theta (dBi)	Phi (dBi)	Theta (dBi)
2400	-0.13	1.02	-2.28	3.80
2450	-1.15	1.20	-2.16	4.07
2500	-1.28	1.79	-2.03	3.79

All rights reserved. Information in this leaflet is proprietary to Pegatron Corp.

Measurement data

- Directional gain table _ Correlated

Frequency (MHz)	2G(DB/2G1/2G2/2G3)		5G(5G1/5G2/5G3/5G4)		6G(DB/6G2/6G3/6G4)	
	E-Phi	E-Theta	E-Phi	E-Theta	E-Phi	E-Theta
2400	4.02	3.91	-	-		
2450	4.31	4.71	-	-		
2500	4.40	5.00	-	-		
5150	-	-	5.08	5.48		
5350	-	-	4.74	5.78		
5500	-	-	5.04	5.78		
5850	-	-	4.98	6.64		
5925	-	-			5.83	6.41
6125	-	-			6.63	5.46
6500	-	-			6.26	5.57
7125	-	-			6.01	5.99

Unit:dB

All rights reserved. Information in this leaflet is proprietary to Pegatron Corp.

Antenna Information

Ant.	2.4G port	5G port	6G port	IoT Port (Z-WAVE)	IoT Port (BT/Zigbee)	Brand Name	Model Name	Ant. Type	Connector	Support	Radio
1	2G0		6G3			Pegatron	DB(2/6G)	Dipole	I-Pex	2.4G+6G	Radio1+Radio3
2	2G2					Pegatron	2G-1	PCB(on board)	N/A	2.4G	Radio1
3	2G1					Pegatron	2G-2	PCB(on board)	N/A	2.4G	Radio1
4	2G3					Pegatron	2G-3	Dipole	I-Pex	2.4G	Radio1
5		5G0				Pegatron	5G-1	Dipole	I-Pex	5G	Radio2
6		5G3				Pegatron	5G-2	PCB(on board)	N/A	5G	Radio2
7		5G2				Pegatron	5G-3	PCB(on board)	N/A	5G	Radio2
8		5G1				Pegatron	5G-4	PCB(on board)	N/A	5G	Radio2
9			6G2			Pegatron	6G-2	PCB(on board)	N/A	6G	Radio3
10			6G1			Pegatron	6G-3	Dipole	I-Pex	6G	Radio3
11			6G0			Pegatron	6G-4	Dipole	I-Pex	6G	Radio3
12				1		Pegatron	Z-wave	PCB(on board)	N/A	Z-wave	Radio4
13					1	Pegatron	Zigbee	PCB(on board)	N/A	Zigbee	Radio5
14					1	Pegatron	BT	Dipole	I-Pex	BT	Radio5

All rights reserved. Information in this leaflet is proprietary to Pegatron Corp.