2.4GHz Miniature PIGTail Antenna

Features

- 1/4 Wave Monopole Antenna
- 21mm long
- 50mm PIGtail to IPEX (ufl)
- Rugged Flexible Plastic Finish.
- VSWR <=2.0
- Omni-Directional Design
- 50ohm Impedance
- Nominal Gain 0dBi
- Omni-Directional Design
- Operating Temp –40 to +70°C
- Insulation resistance 500MÝ @500Vdc
- Custom Cables on request

Applications

- WiFi Applications
- General Low Power Radio
- M2M Applications

Ordering Information

PART No	Description
ANT-24G-S21-P5FL	Stubby Antenna straight 50mm RG178 to iPEX (ufl)

Custom Versions

Custom versions are available, for example, alternative cable type and length (RG178 with varying OD)
Alternative connectors e.g. MMCX, MCX, SMA etc or open ended

Mechanical Data

Mounting Thread is M4.5 x 0.5P, Length 6mm

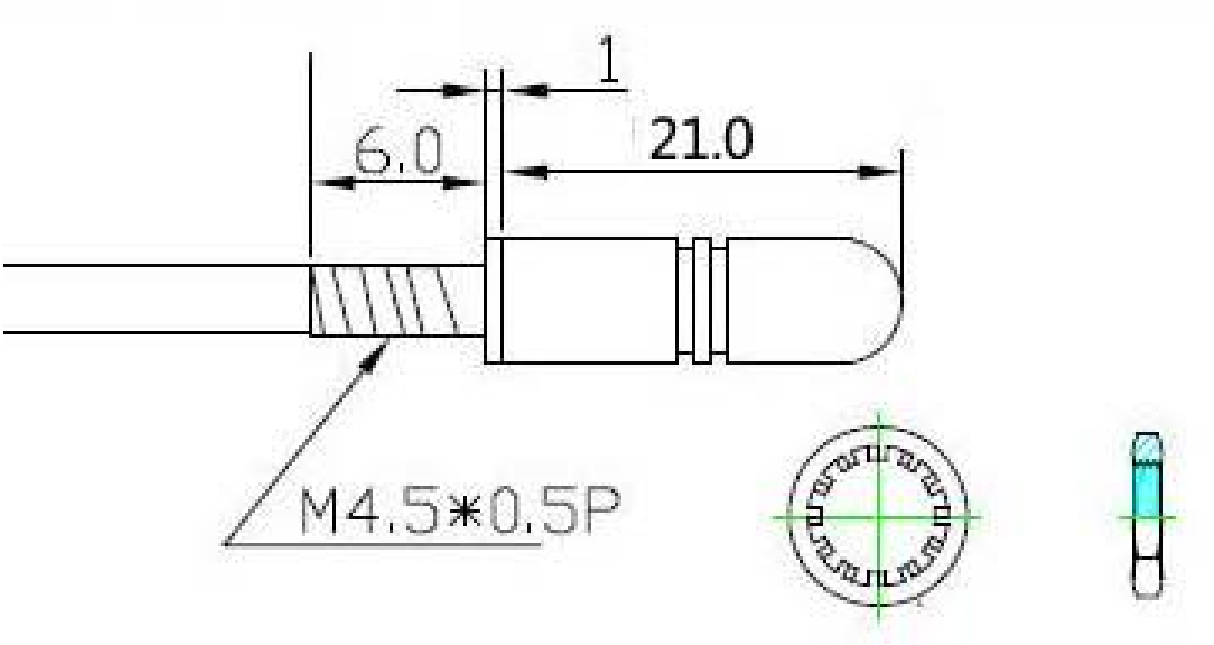

Test Setup for Measurements

Characteristics for this antenna were taken with the following conditions:

1. Antenna mounted on a ground plane 100x100mm.
2. Measurement Equipment: HP 8753ET 300KHZ~6 GHZ
3. Cable: CFD200, 500mm, SMA(M) to SMA(M)

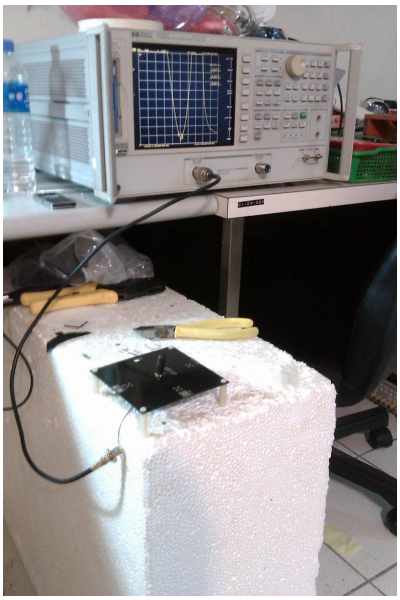

DS-24GS21P-1

VSWR

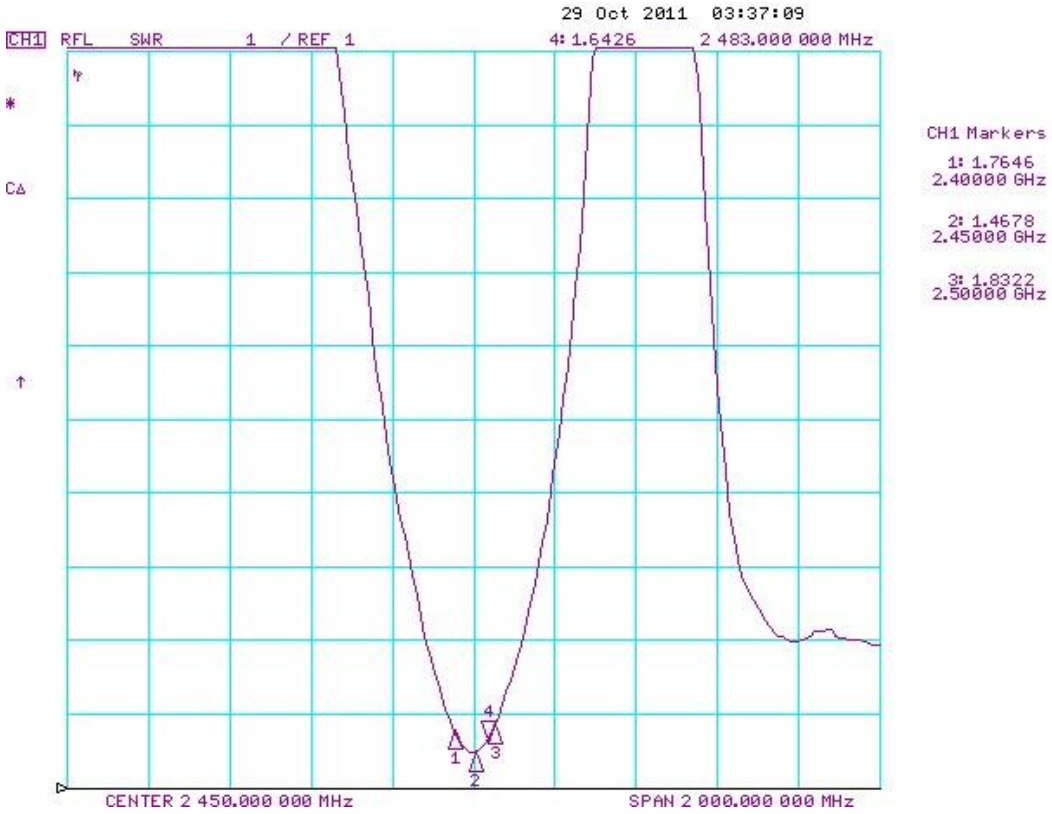

Return Loss

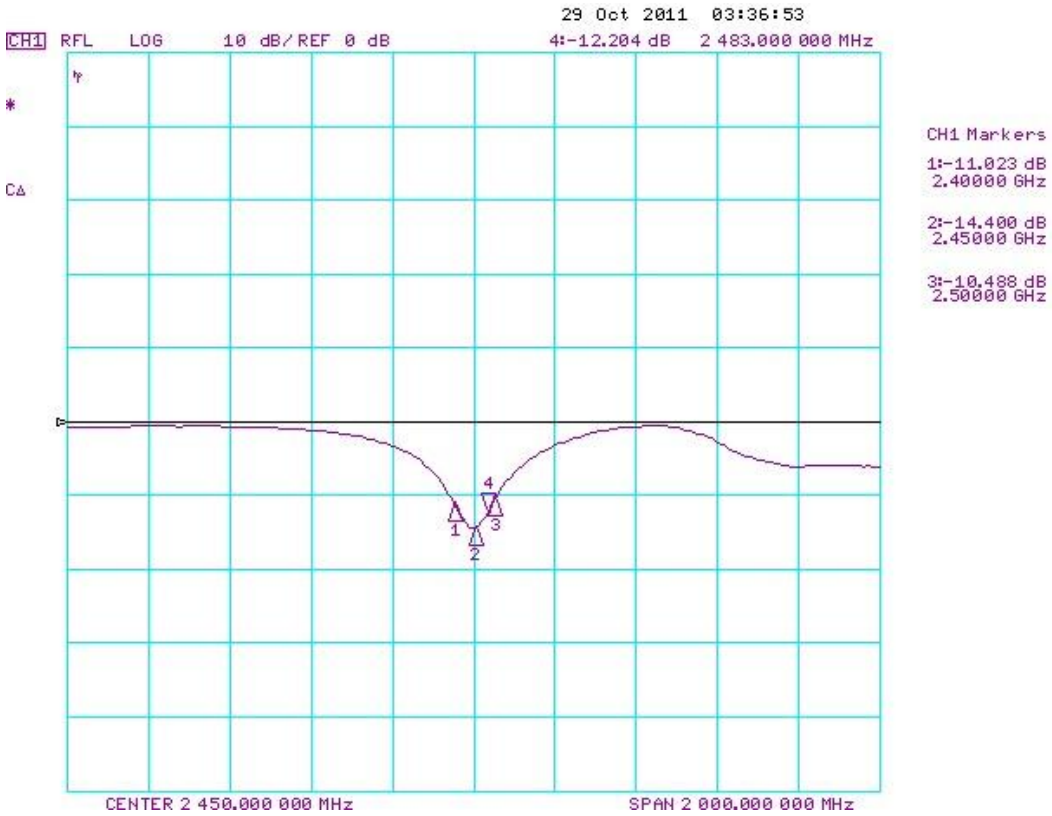

RF Solutions Ltd. Recycling Notice

Meets the following EC Directives:

DO NOT
Discard with normal waste, please recycle.

ROHS Directive 2002/95/EC
Specifies certain limits for hazardous substances.

WEEE Directive 2002/96/EC
Waste electrical & electronic equipment. This product must be disposed of through a licensed WEEE collection point. RF Solutions Ltd., fulfils its WEEE obligations by membership of an approved compliance scheme.

Disclaimer:
Whilst the information in this document is believed to be correct at the time of issue, R.F.Solutions Ltd does not accept any liability whatsoever for its accuracy, adequacy or completeness. No express or implied warranty or representation is given relating to the information contained in this document. R.F.Solutions Ltd reserves the right to make changes and improvements to the product(s) described herein without notice. Buyers and other users should determine for themselves the suitability of any such information or products for their own particular requirements or specification(s). R.F.Solutions Ltd shall not be liable for any loss or damage caused as a result of user's own determination of how to deploy or use R.F.Solutions Ltd's products. Use of R.F.Solutions Ltd products or components in life support and/or safety applications is not authorised except with express written approval. No licences are created, implicitly or otherwise, under any of R.F.Solutions Ltd's intellectual property rights. Liability for loss or damage resulting or caused by reliance on the information contained herein or from the use of the product (including liability resulting from negligence or where R.F.Solutions Ltd was aware of the possibility of such loss or damage arising) is excluded. This will not operate to limit or restrict R.F.Solutions Ltd's liability for death or personal injury resulting from its negligence.

www.rfsolutions.co.uk

RF Solutions Ltd
Unit 21 Cliffe Industrial Estate, Lewes, East Sussex, United Kingdom, BN8 6JL
Tel. Sales: +44 (0)1273 898 000 • Tech. Support: +44 (0)1273 898 007