ARISTOTLE ENTERPRISES INC.

Specifications

Antenna Type：Dipole

RFA-25-AP152R-70B360

Specifications

Frequency	2400-2500 MHz	5150-5875 MHz
Peak gain	2.55 dBi	2.34 dBi
Average gain	-3.87 dBi	-3.84 dBi
Efficiency	41 %	41.3 %
VSWR	3.5 : 1 Max.	3.0 : 1 Max.
Polarization	Linear, vertical	
Impedance	50 Ω	
Connector	IPEX	
Cable	Ø1.13 L:360mm	

Environment & Mechanical Characteristics

Temperature	- 10℃ to +55℃
Humidity	95% @ 25℃

VSWR

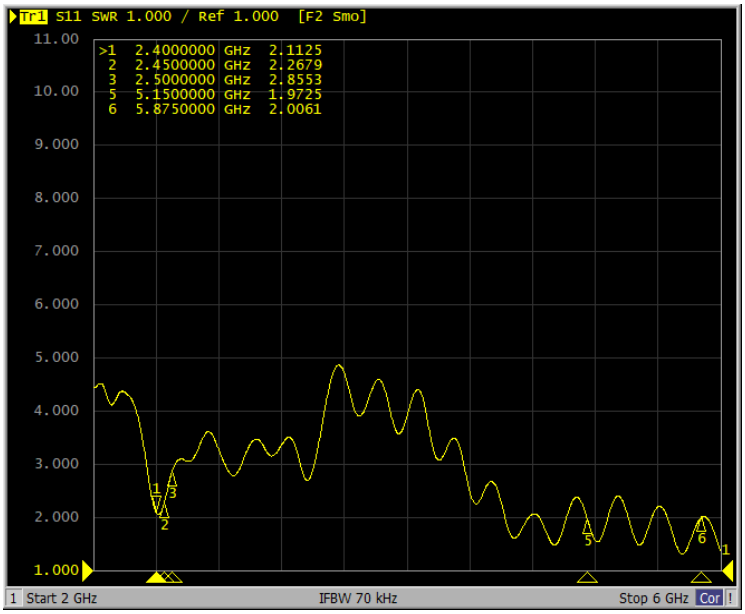

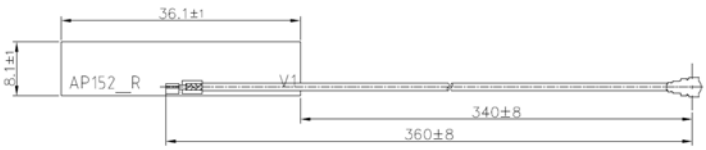

ARISTOTLE

8F, No.63, Juguang Rd, Zhonghe Dist, New Taipei City 235, Taiwan, R.O.C.
Tel : +886-2-2225-8209 Fax: +886-2-2225-7523 www.aristotle.com.tw

Radiation Pattern

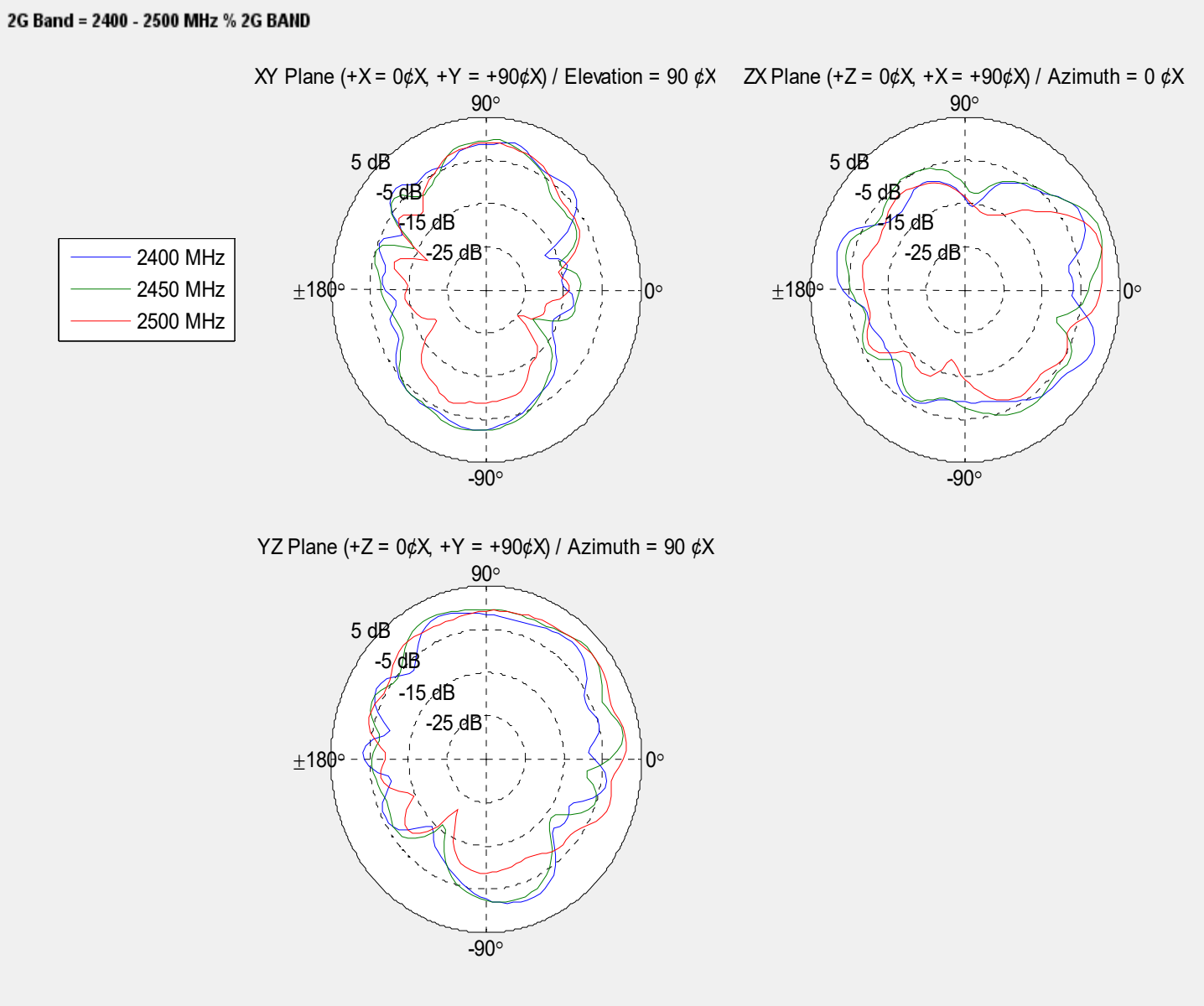

Radiation Pattern

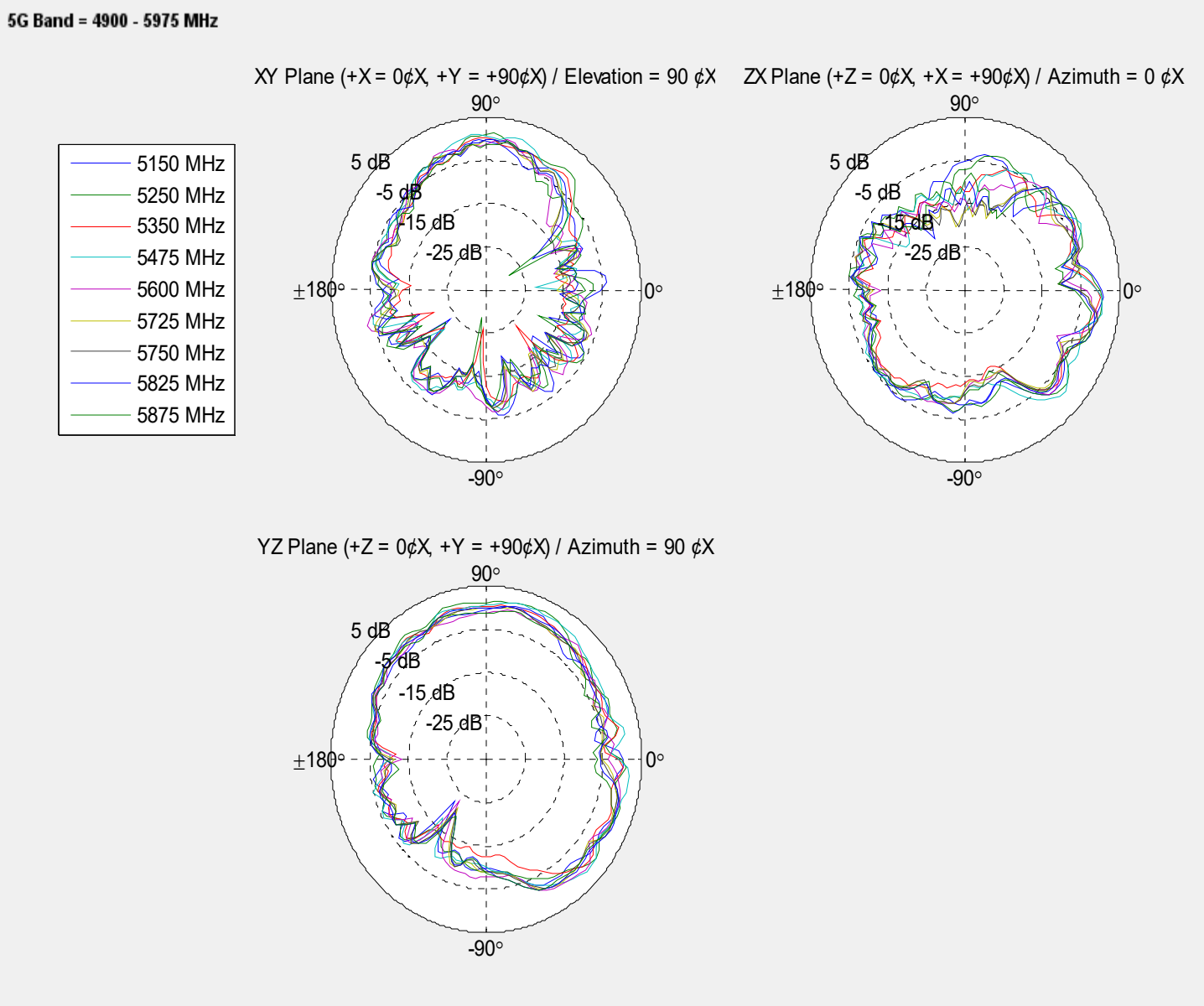

ARISTOTLE
ENTERPRISES INC.

Specifications

Equipment Description	Manufacturer	Identification no.	Current calibration date	Next calibration date
Universal Radio Communication tester	Anritsu	MT8821C	2022/07/19	2023/07/18
Network Analyzer	Keysight	E5063A	2021/12/02	2024/12/01
Sleeve Dipole	MVG	SD740	2022/05/23	2025/05/22
Dual Ridge Horn	MVG	SH600-25	2022/05/23	2025/05/22
Wideband Dipole	MVG	WD6000-20	2022/05/23	2025/05/22
StarLab probe array	MVG	StarLab	2022/05/23	2023/05/22
Measurement software	MVG	Wave Studio 2020.2.7	N/A	N/A
Wireless protocol tester	Anritsu	MT8862A	2022/07/19	2023/07/18

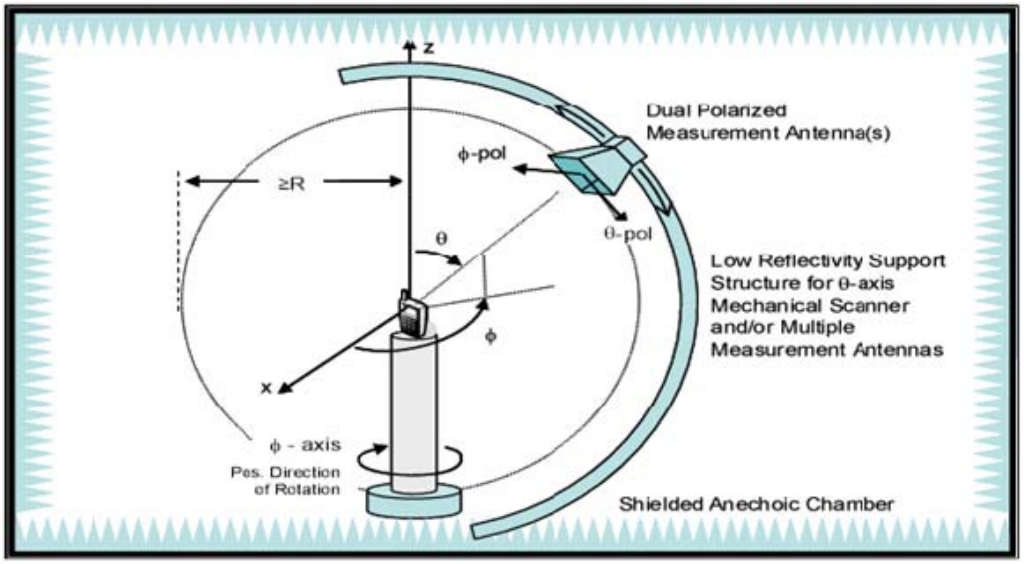

測試人員：Jerry

測試日期：2022/11/18

ARISTOTLE
8F, No.63, Juguang Rd, Zhonghe Dist, New Taipei City 235, Taiwan, R.O.C.
Tel : +886-2-2225-8209 Fax: +886-2-2225-7523 www.aristotle.com.tw