iControl Incorporated
http://www.iControl-Inc.com

iCHIME™Module
Operational Manual

Background.

The iCHIME™Module (iCHIME™for short) is 2.4GHz bi-directional radio transceiver. A User may configure the device to operate as a Radio Frequency Identification Device (RFID) to support tracking shipping containers in a worldwide supply chain using the Marine Asset Tag Tracking System (MATTS) communication protocol. An iCHIME™module utilizes a low power, wireless, radio operating in the 2.4 GHz band as its primary mode of communication. The wireless radio operates in compliance with IEEE Standard 802.15.4-2006. The iCHIME™utilizes the same radio, processor, and User interface software as iControl's iTAG™. The iCHIME™also supports the same command list as iControl's iTAG™. The iCHIME™ is User configurable to periodically transmit the iCHIME™s status via the MATTSradio network. The module may operate as stand alone device or may be used as a radio transceiver for devices that communicate data as a part of a larger system.

The User interface for the module is a twenty (20) pin connector on the bottom of the module.

Figure 1 iCHIME™ and Network Related Devices (Left to right: iCHIME™ Module, iTAG™ repeater for iCHIME™s, iCHIME™ and iTAG™ reader)

iCHIME™Module Radio Operation.

This section intentionally blank for long-term confidentiality purposes.

Other Features.

In addition to the wireless radio, the iCHIME™provides other features for system integration.

1. Two RS-232 serial UARTs are available for the User to communicate to the module from secondary systems to transmit data via the radio transceiver. The User has complete control for setting the baud rate, data interval and packet format for data transmission.
2. The iCHIME™hosts eight channels of 13 bit resolution Analog to Digital conversion. These inputs can be used to monitor external sensors attached to the iCHIME™(temperature, pressure, vibration, etc.). The iCHIME™user interface includes command and data handling support to issue alarms or automate behavior based on thresholds for these input.
3. There is an onboard temperature sensor integrated with iCHIME™. The default iCHIME™data packet includes the temperature data.
4. iCHIME™provide date time stamps for all data. The onboard clock for the iCHIME™is set to UTC by readers in the network or from an iTAG™GPS by commands.

Functional Block Diagram.

The iCHIME™module integrates a low power microprocessor and a 2.4Ghz radio The iCHIME™module also includes a software User interface for radio control and data transmission. Additionally, the iCHIME™can retrieve User data via the two serial UARTs or provide up to 8 channels of analog to digital data.

Please note that the iCHIME™uses the same command list as the iTAG™**command list**. For iCHIME™ command and control, please refer to the *iTAG™Command List* for a complete description of commands that control the iCHIME™module.

The iCHIME™module is equipped with an integrated trace antenna rated at 3.5 dBi. All mobile applications will utilize the integral antenna provided with the iCHIME™module.

Optionally, a micro coax connector may be utilized to connect external antenna to the iCHIME™module. iControl can provide iCHIME™modules with external antenna connectors that are certified and licensed for external antenna operations.

NOTE: Users may not modify the antenna or its connection in anyway or risk violating radio law.

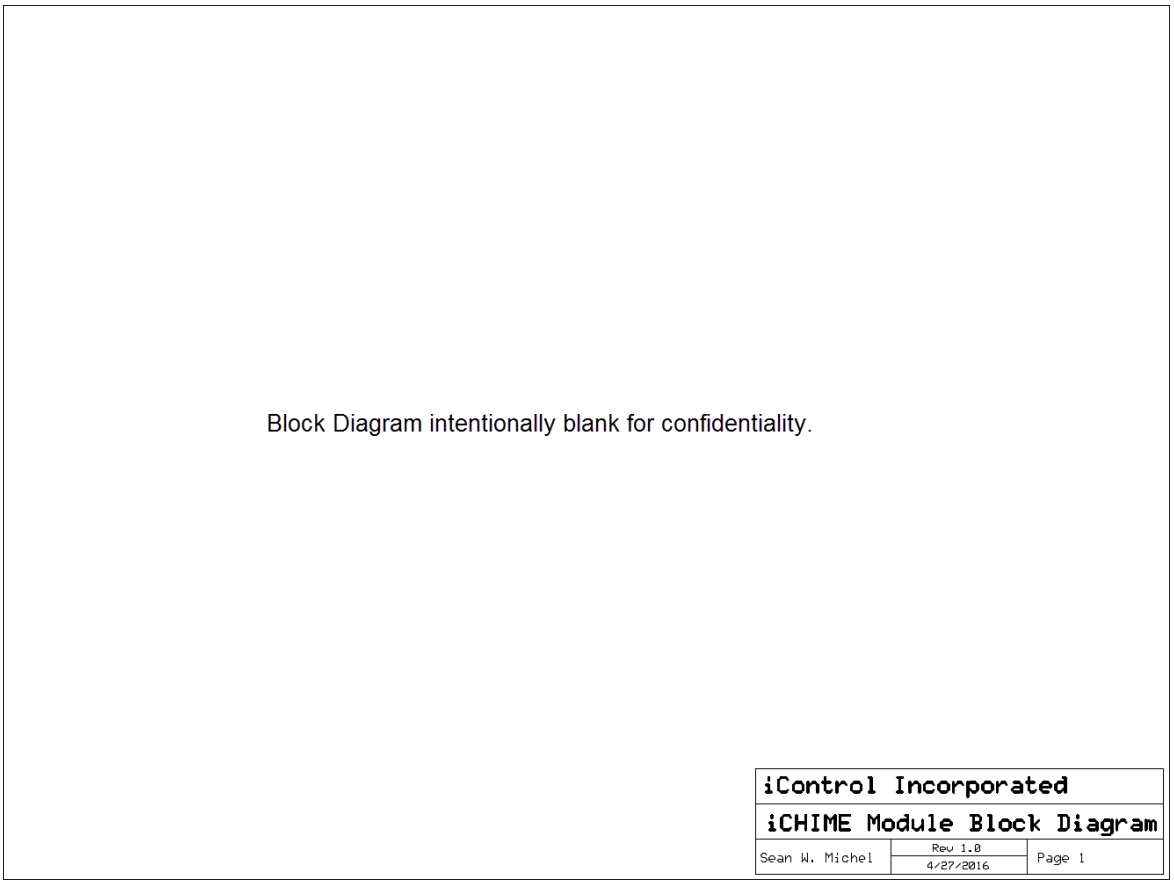

Figure 2 iCHIME™ Module Block Diagram

Absolute Maximum Ratings.

Under no circumstances must the absolute maximum ratings giving in this table be violated. Stress exceeding one or more of the limiting values may cause permanent damage to the device.

Parameter	Min	Max	Units	Condition
Supply Voltage	-0.3	5.5	V	All supply pins must have same voltage
Voltage on any digital pin	-0.3	3.6	V	N/A
Input RF level		10	dBm	
Storage temperature range	-50	150	C	
Operating ambient temperature	-40	85	C	

Figure 3 Maximum Ratings

Caution! *ESD sensitive device. Precaution should be used when handling the device in order to prevent permanent damage.*

General Characteristics.

PARAMETER	TEST CONDITIONS	MIN	TYP	MAX	UNIT
Power mode 1 → active	Digital regulator on, 16-MHz RCOSC and 32-MHz crystal oscillator off. Start-up of 16-MHz RCOSC		4		µs
Power mode 2 or 3 → active	Digital regulator off, 16-MHz RCOSC and 32-MHz crystal oscillator off. Start-up of regulator and 16-MHz RCOSC		0.1		ms
Active → TX or RX	Initially running on 16-MHz RCOSC, with 32-MHz XOSC OFF		0.5		ms
	With 32-MHz XOSC initially on			192	µs
RX/TX and TX/RX turnaround				192	µs
RADIO PART					
RF frequency range (1)	Programmable in 1-MHz steps, 5 MHz between channels for compliance with [1]	2394		2507	MHz
Radio baud rate	As defined by [1]		250		kbps
Radio chip rate	As defined by [1]		2		MChip/s
Flash erase cycles				20	k cycles
Flash page size			2		KB

(1) Programmable in 5MHz steps starting at 2405MHz per IEEE 802.15.4

iCHIME™Radio Specification (Transmit).

PARAMETER	TEST CONDITIONS	MIN	TYP	MAX	UNIT
Nominal output power	Delivered to a single-ended 50-Ω load through a balun using maximum-recommended output-power setting [1] requires minimum −3 dBm	7.3	20	21.9	dBm
Programmable output power range			32		dB
Spurious emissions Measured conducted according to stated regulations. Only largest spurious emission stated within each band.	Max recommended output power setting(1) 25 MHz–1000 MHz (outside restricted bands) 25 MHz–2400 MHz (within FCC restricted bands) 25 MHz–1000 MHz (within ETSI restricted bands) 1800–1900 MHz (ETSI restricted band) 5150–5300 MHz (ETSI restricted band) At 2 × f_c and 3 × f_c (FCC restricted band) At 2 × f_c and 3 × f_c (ETSI EN 300-440 and EN 300-328)(2) 1 GHz–12.75 GHz (outside restricted bands) At 2483.5 MHz and above (FCC restricted band) f_c= 2480 MHz(3)		 –60 –60 –60 –57 –55 –42 –31 –53 –42		dBm
Optimum load impedance	Differential impedance as seen from the RF port (RF_P and RF_N) towards the antenna		69 + j29		Ω

Parameter	Condition		Typical	Unit
Emission with TXPOWER = 0xE5	Conducted 2•RF (FCC restricted band) Conducted 3•RF (FCC restricted band)		–51.8 –49.5	dBm
Max Error Vector Magnitude (EVM)	IEEE 802.15.4 requires max. 35% Measured as defined by IEEE 802.15.4	TXPOWER = 0xF5, f = IEEE 802.15.4 channels	17	%
		TXPOWER = 0xE5, f = IEEE 802.15.4 channels	12.5	
		TXPOWER = 0xD5, f = IEEE 802.15.4 channels	7.8	
		TXPOWER = 0xC5 f = IEEE 802.15.4 channels	4.4	

iCHIME™Radio Specification (Receive).

Parameter	Condition	Typical	Unit
Receive Sensitivity HGM	1 % PER, IEEE 802.15.4 requires -85 dBm	–99	dBm
Receive Sensitivity LGM	1 % PER, IEEE 802.15.4 requires -85 dBm	–95.5	
Saturation HGM	IEEE 802.15.4 requires -20 dBm	–2	
Saturation LGM	IEEE 802.15.4 requires -20 dBm	–1	

PARAMETER	TEST CONDITIONS	MIN	TYP	MAX	UNIT
Adjacent-channel rejection, 5-MHz channel spacing	Wanted signal –82 dBm, adjacent modulated channel at 5 MHz, PER = 1 %, as specified by [1]. [1] requires 0 dB		49		dB
Adjacent-channel rejection, –5-MHz channel spacing	Wanted signal –82 dBm, adjacent modulated channel at –5 MHz, PER = 1 %, as specified by [1]. [1] requires 0 dB		49		dB
Alternate-channel rejection, 10-MHz channel spacing	Wanted signal –82 dBm, adjacent modulated channel at 10 MHz, PER = 1%, as specified by [1] [1] requires 30 dB		57		dB
Alternate-channel rejection, –10-MHz channel spacing	Wanted signal –82 dBm, adjacent modulated channel at –10 MHz, PER = 1 %, as specified by [1] [1] requires 30 dB		57		dB
Channel rejection ≥ 20 MHz ≤ –20 MHz	Wanted signal at –82 dBm. Undesired signal is an IEEE 802.15.4 modulated channel, stepped through all channels from 2405 to 2480 MHz. Signal level for PER = 1%.		57 57		dB
Co-channel rejection	Wanted signal at –82 dBm. Undesired signal is 802.15.4 modulated at the same frequency as the desired signal. Signal level for PER = 1%.		–3		dB
Blocking/desensitization 5 MHz from band edge 10 MHz from band edge 20 MHz from band edge 50 MHz from band edge –5 MHz from band edge –10 MHz from band edge –20 MHz from band edge –50 MHz from band edge	Wanted signal 3 dB above the sensitivity level, CW jammer, PER = 1%. Measured according to EN 300 440 class 2.		 –33 –33 –32 –31 –35 –36 –34 –34		dBm
Spurious emission. Only largest spurious emission stated within each band. 30 MHz–1000 MHz 1 GHz–12.75 GHz	Conducted measurement with a 50-Ω single-ended load. Suitable for systems targeting compliance with EN 300 328, EN 300 440, FCC CFR47 Part 15 and ARIB STD-T-66.		< –80 –57		dBm
Frequency error tolerance(1)	[1] requires minimum 80 ppm		±150		ppm
Symbol rate error tolerance(2)	[1] requires minimum 80 ppm		±1000		ppm

(1) Difference between center frequency of the received RF signal and local oscillator frequency.
(2) Difference between incoming symbol rate and the internally generated symbol rate

OEM Installation Instruction:

An OEM integrator utilizes the 2x10 x2mm pin header connector on the bottom of the iCHIME™. To apply power, utilize serial data, and connect to analog interfaces, the OEM must provide a 2x10 x 2mm pin socket on their integrating electronics.

Interface Specification.

The interface diagram noted below is for the mating connector on the User's electronics. All interfaces to the radio are buffered to prevent User interface electronics from interfering with the operation of the radio.

(Top View) Users Mating Connector for iCHIME™ Module

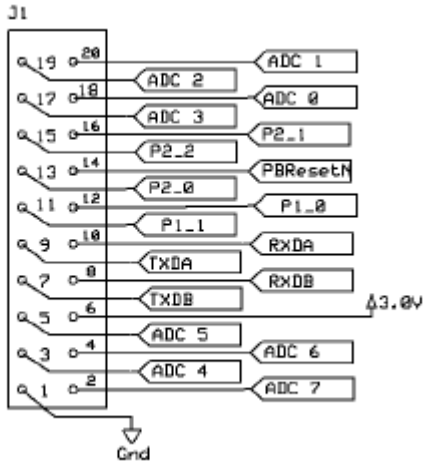

PIN	Name	Type	Description
1	GND	PWR	Ground
2	Analog 7	I	Analog Channel 7 (0-3.3 V input)
3	Analog 4	I	Analog Channel 4 (0-3.3 V input)
4	Analog 6	I	Analog Channel 6 (0-3.3 V input)
5	Analog 5	I	Analog Channel 5 (0-3.3 V input)
6	VIN	PWR	3.3-6.0 V input
7	TXDB	Output	Serial Port B transmit output (0-3.3V)
8	RXDB	Input	Serial Port B receive input (0-3.3V)
9	TXDA	Output	Serial Port A transmit output (0-3.3V)
10	RXDA	Input	Serial Port A receive input (0-3.3V)
11	P1_1	I/O	General Purpose I/O (0-3.3 V input)
12	P1_0	I/O	General Purpose I/O (0-3.3 V input)
13	P2_0	I/O	General Purpose I/O (0-3.3 V input)
14	PBReset	Input	Reset Pin, Active low, if not used keep float
15	P2_2	I/O	General Purpose I/O (0-3.3 V input)
16	P2_1	I/O	General Purpose I/O (0-3.3 V input)
17	Analog 3	I	Analog Channel 3 (0-3.3 V input)
18	Analog 0	I	Analog Channel 0 (0-3.3 V input)
19	Analog 2	I	Analog Channel 2 (0-3.3 V input)
20	Analog 1	I	Analog Channel 2 (0-3.3 V input)

Module Mechanical Specification.

The iCHIME™module is manufactured on a 0.062" thick FR4 PCB substrate. There are four 0.10" mounting holes which may be used to secure the module in an enclosure or to mount on a host motherboard. All radio components are integrated under a mechanically secure, tamperproof RF shield.

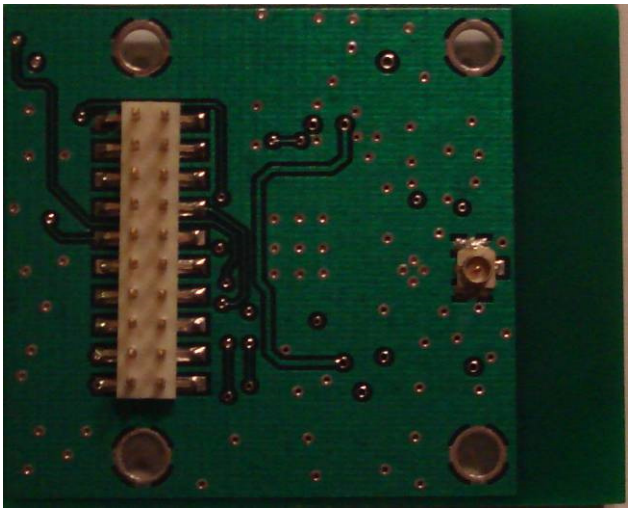

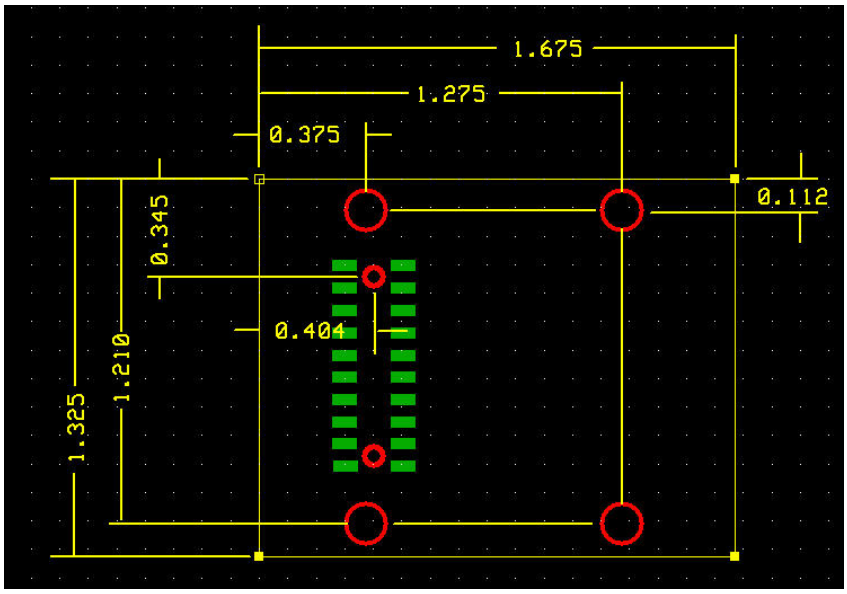

iCHIME™ Module Mechanical Dimensions (in inches)

Module Unique Address Identification.

Each iCHIME™module is assigned a unique 8 byte MAC address by iControl Incorporated. The MAC address is used for radio network address identification. The MAC address can not be modified by the User and is located in protected flash memory. Figure 5 depicts the communication protocol between iControl iCHIME™and the iGATE™reader. The communication protocol utilizes a unique 8 byte MAC address defined by the IEEE 802.15.4 standard.

In Figure 5,

The iCHIME™address is (0x0035A92300000002).

The iGATE™address is (0x0035A9230A010203).

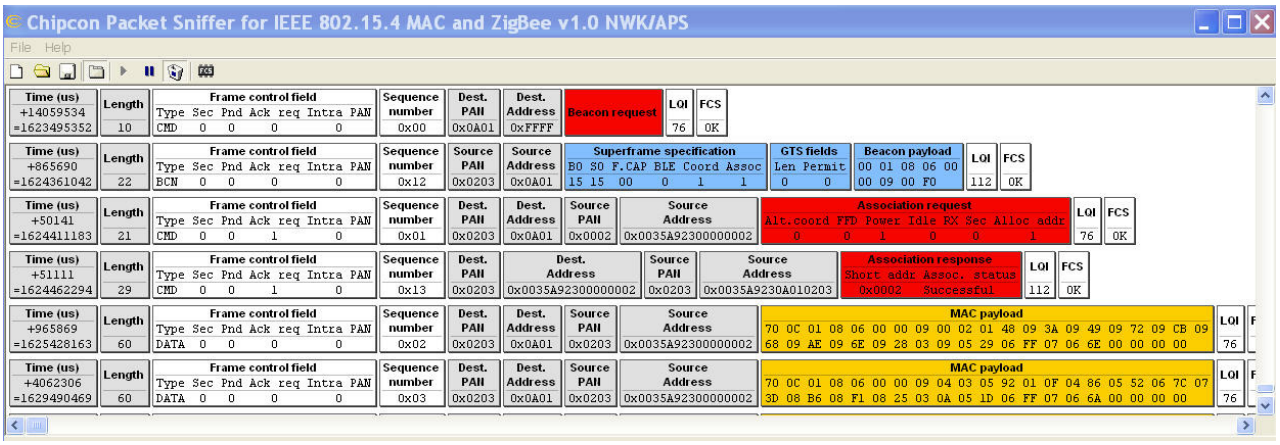

Figure 5

FCC Compliance:

This equipment has been tested and found to comply with the limits for a Class B digital device, pursuant to Part 15 of the FCC rules. These limits are designed to provide reasonable protection against harmful interference in a residential installation. This equipment generates, uses, and can radiate radio frequency energy and, if not installed and used in accordance with the instructions, may cause harmful interference to radio communications. However, there is no guarantee that interference will not occur in a particular installation.

The iCHIME™ Module is not sold to customers or third parties as a stand-alone product at this time. Any use of the module or system it is integrated into is controlled solely by iControl Incorporated employees. As such, any system utilizing an iCHIME™ Module and an antenna with gain higher than 7dBi will be configured by an iControl Incorporated employee to disable radio channel 26. Channel 26 will only be allowed for use in systems which have antennas with 7dBi or less gain and are configured by an iControl Incorporated employee to reduce radio transmit power to FCC acceptable levels.

Troubleshooting:

If this equipment does cause harmful interference to radio or television reception, which can be determined by turning the equipment off and on, the user is encouraged to try to correct the interference by one or more of the following measures:

1. Reorient or relocate the receiving antenna.
2. Increase the separation between the equipment and receiver.
3. Connect the equipment to an outlet on a circuit different from that to which the receiver is connected.
4. Consult the dealer or an experienced radio/TV technician.

Conditions:

Operation is subject to the following two conditions:
1. This device may not cause harmful interference
2. This device must accept any interference received, including interference that may cause undesired operation.

Markings:

To satisfy FCC exterior labeling requirements the following text must be placed on the exterior of the product. FCC ID: **W2E-ICHIME-M10**

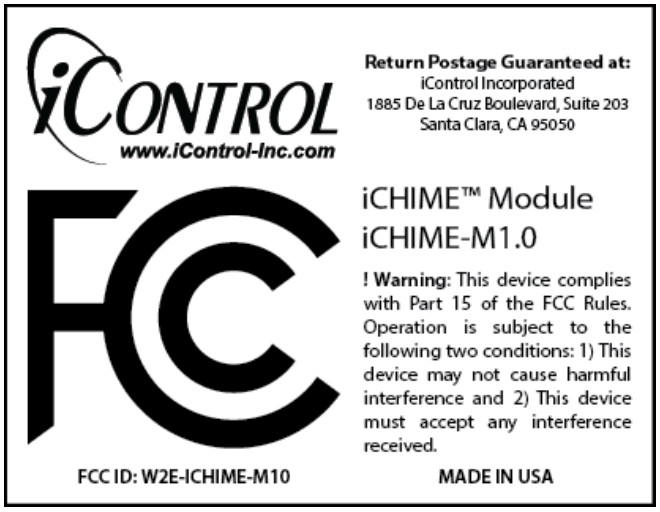

Figure 7 Example FCC Label

Figure 8 iCHIME™ FCC Label Position

FCC Warnings:

Modifications: Modifications not expressly approved by the manufacturer could void the user's authority to operate the equipment under FCC Rules.

Radio Frequency Exposure:

Notes:

1) For mobile or fixed location transmitters the minimum separation distance is 20cm, even if calculators indicate the MPE distance is less.

2) This equipment has been evaluated in accordance with the FCC bulletin 56 "Hazards of radio frequency and electromagnetic fields" and bulletin 65 " Human exposure to radio frequency and electromagnetic fields.

3) Safe operation in an uncontrolled environment will result if the following distances from the device are maintained as a minimum.

Use of Modular Certification:

For a host manufacture's using a certified modular, if (1) the module's FCC ID is not visible when installed in the host, or (2) if the host is marketed so that end users do not have straightforward commonly used methods for access to remove the module so that the FCC ID of the module is visible; then an additional permanent label referring to the enclosed module: "Contains Transmitter Module FCC ID: XYZMODEL1" or "Contains FCC ID: XYZMODEL1" must be used.

NCC 警語

- 減少電磁波影響，請妥適使用
(For Reducing RF Influence, Use Properly)

- 為維護隱私權，請妥適使用
(For protect individual privacy, Use Properly)

- 本器材須經專業工程人員安裝及設定，始得設置使用，且不得直接販售給一般消費者。
(This device must be installed by expert and will not be sold directly to the general public through retail store)

- 低功率電波輻射性電機管理辦法
第十二條
經型式認證合格之低功率射頻電機，非經許可，公司、商號或使用者均不得擅自變更頻率、加大功率或變更原設計之特性及功能。
第十四條
低功率射頻電機之使用不得影響飛航安全及干擾合法通信；經發現有干擾現象時，應立即停用，並改善至無干擾時方得繼續使用。
前項合法通信，指依電信法規定作業之無線電通信。
低功率射頻電機須忍受合法通信或工業、科學及醫療用電波輻射性電機設備之干擾。

WARNING
Administrative Regulations on Low Power Radio Waves Radiated Devices warning:
Article 12
Without permission granted by the NCC, any company, enterprise, or user is not allowed to change frequency, enhance transmitting power or alter original characteristic as well as performance to an approved low power radio-frequency devices.
Article 14
The low power radio-frequency devices shall not influence aircraft security and interfere legal communications; If found, the user shall cease operating immediately until no interference is achieved.
The said legal communications means radio communications is operated in compliance with the Telecommunications Act.
The low power radio-frequency devices must be susceptible with the interference from legal communications or ISM radio wave radiated devices.