FUJIFILM

instax WIDE Evo™

EN

FR

ES

HYBRID INSTANT CAMERA
[INSTANT PRINT + DIGITAL TECHNOLOGIES]

APPAREIL INSTANTANÉ HYBRIDE
[IMPRESSION INSTANTANÉE + TECHNOLOGIES NUMÉRIQUES]

Quick Start Guide/Safety precautions
Guide de démarrage rapide/Précautions de sécurité
Guía de inicio rápido/Precauciones de seguridad

model number/numéro de modèle/número de modelo: FI028 BO28A33001-300

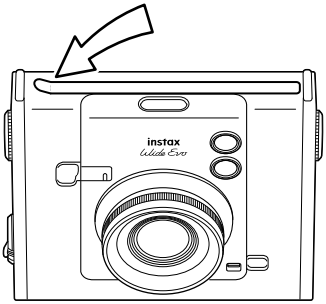

EN Please peel off the protective covers before use.

FR Veuillez retirer la feuille de protection avant utilisation.

ES Retire la lámina protectora antes de usar.

Independent JPEG Group (IJG) Licenses
This software is based in part on the work of the Independent JPEG Group.

© 2025 FUJIFILM Corporation. All rights reserved.

BO28-300_QM_NA.indb 2 2024/07/25 14:07

Note when Handling the instax™ WIDE instant film pack

EN Do not open the back cover until you have used up the film; otherwise, the rest of the film is exposed and turns white. The film can no longer be used.

BO28-300_QM_NA.indb 3 2024/07/25 14:07

Removing a memory card

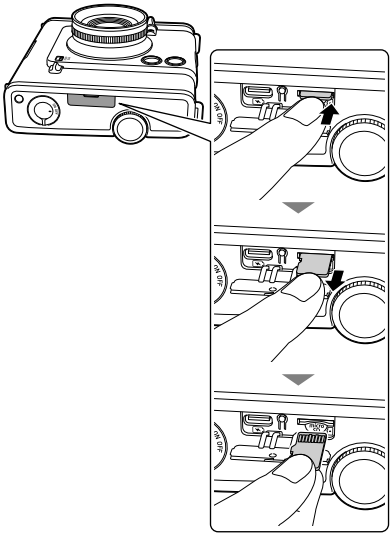

EN To remove a memory card, press down on it with your finger, then gently release the pressure on the card to eject from the card slot.

BO28-300_QM_NA.indb 4 2024/07/25 14:07

Before Use

Before using the camera, check you have the following.

Supplied Accessories

• USB Type C cable (BO38A34001) (1)

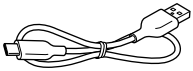

• Shoulder strap (1)

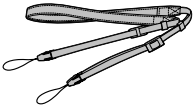

• Lens cap (1)

• Quick Start Guide (1)

- Use the strap over your shoulder, not around your neck.
- Make sure the shoulder strap does not hang over the film ejection slot.
- The battery is not fully charged at the factory, be sure to charge the battery before using the camera.

This book provides a quick guide to the use of the "instax WIDE Evo"™.
For a comprehensive guide of the "instax WIDE Evo™", please access the following web site and download the digital User's Guide (Full version).
https://instax.com/wide_evo/support/manuals/
You can also scan the following QR Code to download the digital User's Guide (Full version).

The text QR Code itself is a registered trademark and wordmark of Denso Wave Incorporated.

Notes on Disposing of the Camera

A built-in lithium ion battery is used in this camera.

When you dispose of the camera, follow your local regulations and dispose of it properly.
Please refer to the supplied CONTACT INFORMATION sheet for disposal advice.
If your country or region is not included in the sheet, please contact your local distributor.

CAUTION

Do not remove the built-in battery by yourself; this may cause you injury.

Disposal of Electrical and Electronic Equipment in Private Households
Disposal of used Electrical & Electronic Equipment (Applicable in the European Union and European countries with separate collection systems)

This symbol on the product, or in the manual and in the warranty, and/or on its packaging indicates that this product should not be treated as household waste. Instead it should be taken to an appropriate collection point for the recycling of electrical and electronic equipment.
By ensuring this product is disposed of correctly, you will help prevent potential negative consequences to the environment and human health, which could otherwise be caused by inappropriate waste handling of this product.
The recycling of materials will help to conserve natural resources. For more detailed information about recycling of this product, please contact your local city office, your household waste disposal service or the shop where you purchased the product.
In Countries outside of EU: If you wish to discard this product, please contact your local authorities and ask for the correct method of disposal.

This Symbol on the batteries or accumulators indicates that those batteries should not be treated as household waste.

For customers in Turkey:

EEE Complies with Directive.

EN

Part Names

Front

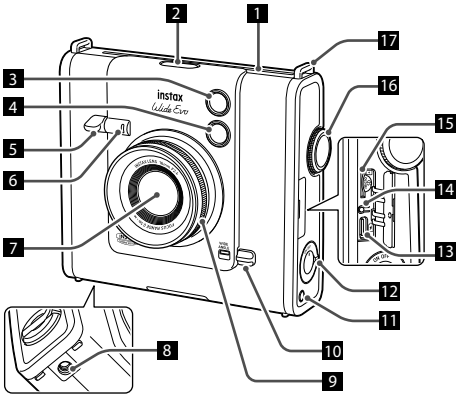

Rear

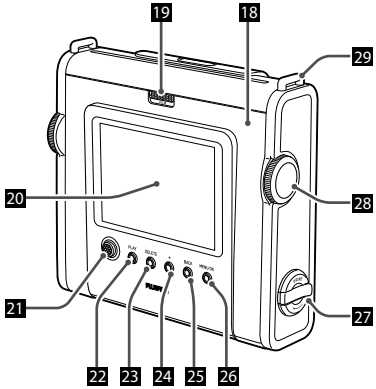

1 Film ejection slot

2 Film style button
Switches between six film styles.

3 Flash
The flash operates depending on the setting. You can also set the flash to not operate.

4 Selfie mirror
You can see yourself in the selfie mirror to check the composition of the photo, and ensure you are in the shot.

5 Shutter lever
Press the shutter lever halfway to focus on the subject. Keeping the shutter lever pressed halfway, press it fully to operate the camera shutter and take a photo. Press the shutter lever in playback mode to switch to shooting mode.

6 Self timer lamp/Charging lamp
The self timer lamp/charging lamp blinks when you take a photo with the self-timer. It also lights up during charging and turns off when charging is complete.

7 Lens

8 Tripod hole
You can attach a tripod by using this hole.

9 Degree control dial
Adjusts the degree of lens effect.

10 Wide angle switch
Sliding the switch upwards shoots in wide-angle mode.

11 Effect reset button
Returns both the lens and film effects to normal.

12 Power switch
Turns the power on or off.

13 USB Type C port
This is the USB port for charging the camera. The USB port cannot be used for data transfer.

14 Reset button *1
If the camera is not operating properly, press this button to force the camera to turn off. After pressing the reset button,

turn the power switch off and then on again to start the camera. Do not use the reset button while the camera is operating normally. Doing so may cause the photo data to be erased.

15 Micro SD card slot
Inserts a micro SD card.

16 Lens dial
Switches between ten lens effects.

17 Strap hook
Pass the cord on the strap through the strap hook to attach the strap to the camera.

18 Film door
When loading/unloading a film pack, slide the film door lock to unlock the film door and lift it open. Do not open the film door until you have used up the film.

19 Film door lock
Slide the film door lock to unlock the film door so that it can be lifted open.

20 LCD monitor
You can see the subject to be photographed during shooting and check photos you have taken on the LCD monitor. You can also view and select the menus on the LCD monitor.

21 Select button
Use the select button to select menu items and to use the functions displayed on the LCD monitor.

22 PLAY button
Press the PLAY button to display the photos you have taken on the LCD monitor. When in shooting mode, this button is also used to switch to playback mode.

23 DELETE button
Deletes the image displayed on the LCD monitor.

24 +(Function) button
Press the +(Function) button in shooting mode to check the current effect on the LCD monitor. You can also save and recall effects.

25 BACK button
Press the BACK button to return to the previous screen.

26 MENU/OK button
During shooting or playback, press the MENU/OK button to display the menu on the LCD monitor. This button is also used to select menu items.

27 Print crank
Prints the image displayed on the LCD monitor.

28 Film dial
Switches between ten film effects.

29 Strap hook
Pass the cord on the strap through the strap hook to attach the strap to the camera.

*1 If the camera is not working properly, press the reset button to reset it.

EN

BO28-300_QM_NA.indb 7 2024/07/25 14:07

EN

About This Camera

Main Features

- **Versatile expressiveness with 10 lens effects and 10 film effects, as well as lens effect degree adjustment and 6 film styles. (*As of January 2025)**
- **You can take wide-angle photos with the widest lens in instax™ history. (*As of January 2025)**
- **You can take photos while looking at the LCD monitor and save them to either the main unit or the micro SD card.**
- **You can select and output your photos to instax™ prints.**
- **A classic design with an authentic feel.**
- **Analog-style operation with lens dial, film dial, degree control dial, and print crank.**
- **Features a selfie mirror for easy selfies.**

Functions Available with the Smartphone App

● **Direct Print**
Transfer a photo from your smartphone to the camera, and print it with the instax™ Direct Print feature. Before printing the photo, you can use the smartphone app to move, rotate, or zoom in/out the photo.
● **Remote Shooting**
Control the camera with your smartphone for remote shooting of photos.
● **Print Photo Save**
You can save printed photos taken with the camera to the smartphone app. You can add instax™ frames to your photos and save them on your smartphone.

Charging the Battery

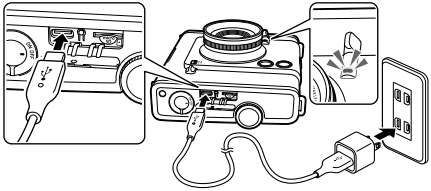

Connect the camera using the supplied USB Type C cable to a USB AC adapter (supplied with your smartphone) then connect the USB AC adapter to an indoor power outlet.

- Charging time is approximately 2 to 3 hours.
- The power delivered by the charger must be between min 1.3 Watts required by the radio equipment, and max 2.5 Watts in order to achieve the maximum charging speed.

Charging Status Indication when the camera is turned off

While charging	Self timer/charging lamp lights up.
Charging finished	Self timer/charging lamp goes off.
Charging error	Self timer/charging lamp flashes.

Loading the instax™ WIDE Film Pack

1 **Slide the film door lock and open the film door.**

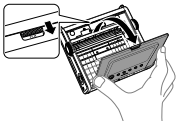

2 **Insert a film pack by aligning the yellow marks.**

3 **Close the film door.**

4 **Remove the black protective film cover that is ejected, automatically.**

BO28-300_QM_NA.indb 8 2024/07/25 14:07

Power On/Off

To turn the camera on, turn the power switch clockwise.

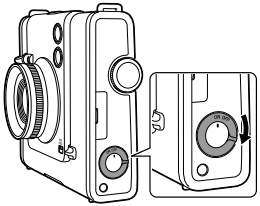

To turn the camera off, turn the power switch anticlockwise.

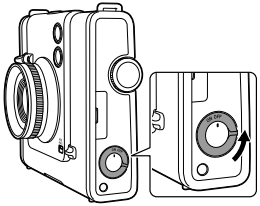

- If you do not operate the camera for a certain period of time, it will automatically turn off. If the camera turns off automatically, turn the power switch off and then on again to turn it on.

Taking Photos

The camera is equipped with a film style that can be combined to create an even greater variety of photographic expressions. Wide-angle photography is also available.
For more information, visit the instax™ Website.

1 Select your desired effect.

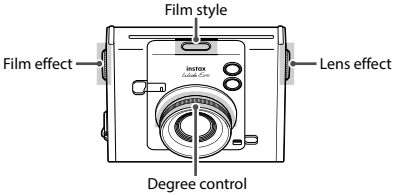

2 Press the shutter lever halfway to focus on the subject.
Check the composition on the LCD monitor.

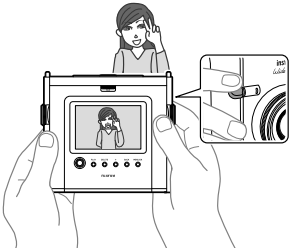

3 Press the shutter button down fully to take a photo.
The shutter is released and the photo is taken.

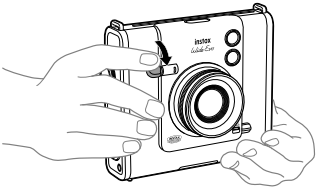

- Do not place your fingers or other objects on the lens when taking photos.

EN

BO28-300_QM_NA.indb 9 2024/07/25 14:07

EN

Outputting Photos

You can output photos. Image rotation, zoom, quality and brightness can be adjusted for output.

1 Press the PLAY button.
The camera switches to the playback mode.

2 Move the select button to right or left to select the photo you want to output.

3 Rotate, zoom, adjust image quality and brightness as required
Press the MENU/OK button to display the setup menu. Move the select button up or down to select an item and press the MENU/OK button to enter.
• For more information, visit the instax™ website.

4 Lift the lever on the print crank and rotate it in a clockwise direction to output.

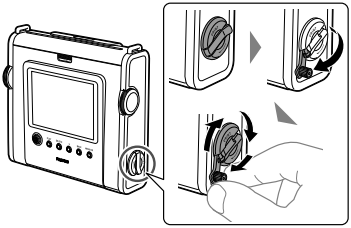

5 After the sound of the film ejecting stops, hold the tip of the ejected film and remove it.

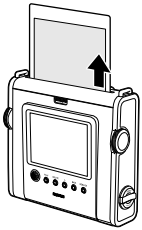

• Be careful not to let your fingers or the camera strap get caught in the film ejection slot.

• Paired with a smartphone app, you can also add different frames to your photos. For more information, visit the instax™ website.

Unloading the instax™ WIDE Film Pack

1 Slide the film door lock and open the film door.

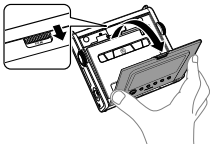

2 Grasp the rectangular holes on the film pack, then pull the film pack out from the camera.

Removing the Battery

- Dispose of the battery according to the instructions of the discharge cooperation store and local government.

1 **Remove the bottom cover using a screwdriver (sold separately).**

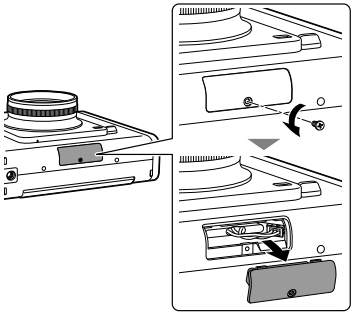

2 **Pull out the wiring, remove the connector, and pull the battery out.**

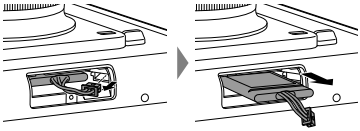

EN

IMPORTANT SAFETY NOTICE

This product has been designed with safety in mind and to also provide safe service when handled correctly in accordance with the Quick Start Guide and the instructions provided. It is important that both the product and the instax™ WIDE film are handled properly and used only to print photos as instructed in the Quick Start Guide and in the instax™ WIDE film instructions. For your ease and safety, please follow what is written in the Quick Start Guide. It is also a good idea to keep the Quick Start Guide in a safe, easy to find place where you can refer to it if needed.

⚠ WARNING

This symbol indicates danger, which could result in injury or death. Please follow these instructions.

⚠ WARNING

⚠If one of the following cases occur, immediately unplug the supplied USB Type C cable, turn the camera off and refrain from using the camera.

- **The camera becomes hot, emits smoke, has a burnt smell, or otherwise seems abnormal.**
- **The camera is dropped into water, or foreign objects like water or metal get inside the camera.**

⚠As the battery is built inside the camera, do not subject it to heat, throw it into an open fire, attempt to drop it, or apply impact to it. Doing so could cause the camera to explode.

⚠ WARNING

⚠Never attempt to take this product apart. You may be injured.

⚠If anything is wrong with the camera, never attempt to repair it by yourself. You may be injured.

⚠If this product is dropped or damaged so that the inside is showing, do not touch it. Contact your FUJIFILM dealer.

⚠Do not touch any parts or projecting parts inside the back cover. You may be injured.

⚠Never get this product wet or handle it with wet hands. Doing so may result in an electric shock.

⚠Promptly unplug the supplied USB Type C cable once the battery is fully charged.

⚠Keep out of the reach of small children. This product could cause injury in the hands of a child.

⚠Do not cover or wrap the camera or the AC power adapter in a cloth or blanket. This can cause heat to build up and distort the casing or cause a fire.

CE	The "CE" mark certifies that this product satisfies the requirements of the EU (European Union) regarding safety, public health, environment and consumer protection. ("CE" is the abbreviation of Conformité Européenne.)

Simple Camera Care

■ **Camera Care**

1. **Do not open the film door until you have used up the film; otherwise, the rest of the film is exposed and turns white and the film can no longer be used.**
2. Your camera is a fragile object. Do not expose it to water, sand or gritty materials and do not drop.
3. Do not use a strap made for cellular phones or other similar electronic products. These straps are usually too weak to hold your camera securely. For safety, only use straps designed for your camera, and use only as specifically intended and instructed.
4. Do not use solvent such as thinner or alcohol to remove dirt.
5. Do not leave your camera in direct sunlight, or hot places such as a car. Do not leave it in damp places for long periods.
6. Moth repellent gas such as naphthalene may affect your camera and prints. Be careful to keep your camera and prints in a safe, dry place.
7. Note that the temperature range within which your camera can be used is +5 °C to +40 °C.
8. Take great care to ensure that printed materials do not violate copyright, image rights, privacy or other personal rights and do not offend public decency. Actions that violate the rights of others, are contrary to public decency or constitute a nuisance may be punishable by law or otherwise legally actionable.
9. This camera is for general household use. It is not suitable for commercial photography and other applications where a large number of prints are used.

■ **Handling the LCD Monitor**

As the LCD monitor can be easily scratched or damaged by sharp or solid objects, we recommend you attach a protective sheet (commercially available) onto the monitor.

■ **Charging the Battery**

The battery is not charged at shipment. Charge the battery completely before use.

Charge the battery using the supplied USB Type C cable. Charging times will increase at ambient temperatures below +10 °C or above +35 °C. Do not attempt to charge the battery at temperatures above +40 °C or at temperatures below +5 °C as the battery will not charge.

■ **Battery Life**

At normal temperatures, the battery can be recharged about 300 times. A noticeable decrease in the length of time

BO28-300_QM_NA.indb 12 2024/07/25 14:07

the battery will hold a charge indicates that it has reached the end of its service life.

■ **Caution: When battery is in use**
The battery and camera body may become warm to the touch after extended use. This is normal.

■ **Certification marks acquired by the camera are located inside the film chamber.**

■ **Caution: When printing photos**

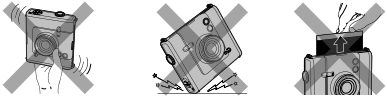

■ **instax™ WIDE Film and Print Care**
See FUJIFILM Instant Film instax™ WIDE for film use instructions. Follow all instructions for safe and proper use.

1. Keep the film in a cool place. Do not leave the film in a place where the temperature is extremely high (e.g., in a closed car) for many hours.
2. Do not puncture, tear, or cut instax™ WIDE film. If film becomes damaged, do not use.
3. When you load a film pack, use the film as soon as possible.
4. If the film has been kept in a place where the temperature is extremely high or low, bring it to room temperature before starting to print photos.
5. Be sure to use the film before the expiration or "Use Before" date.
6. Avoid airport checked luggage inspection and other strong X-ray illumination. The effect of fogging, etc. may appear on unused film. We recommend that you carry the camera and/or the film onto the aircraft as carry-on luggage. (Check with each airport for more information.)
7. Avoid strong light, and keep the developed prints in a cool and dry place.
8. Do not puncture or cut this film as it contains a small amount of caustic paste (high alkaline). Never let children or animals put the film into their mouth. Also pay attention so that the paste does not come into contact with skin or clothes.
9. In case the paste inside the film comes into contact with skin or clothes, immediately wash off with plenty of water. If the paste comes into contact with the eyes or mouth, immediately wash the area with plenty of water and contact a doctor. Note that the alkaline inside the film remains active for about 10 minutes after the photo has been printed.
10. Do not store photos in a sealed bag, as this may cause discoloration.
11. Do not touch the image during development time.

■ **Cautions on Handling the Film and Photo Prints**
For details, refer to the instructions and warnings on FUJIFILM Instant Film instax™ WIDE.

EN

Bluetooth® Devices: Cautions

IMPORTANT: Read the following notices before using the product's built-in Bluetooth transmitter.

■ **Use only as part of a Bluetooth network.**
FUJIFILM does not accept liability for damages resulting from unauthorized use. Do not use in applications requiring a high degree of reliability, for example in medical devices or other systems that may directly or indirectly impact human life. When using the device in computer and other systems that demand a greater degree of reliability than Bluetooth networks, be sure to take all necessary precautions to ensure safety and prevent malfunction.

■ **Use only in the country in which the device was purchased.**
This device conforms to regulations governing Bluetooth devices in the country in which it was purchased. Observe all location regulations when using the device. FUJIFILM does not accept liability for problems arising from use in other jurisdictions.

■ **Wireless data (images) may be intercepted by third parties.**
The security of data transmitted over wireless networks is not guaranteed.

■ **Do not use the device in locations subject to magnetic fields, static electricity, or radio interference.**
Do not use the transmitter in the vicinity of microwave ovens or in other locations subject to magnetic fields, static electricity, or radio interference that may prevent reception of wireless signals. Mutual interference may occur when the transmitter is used in the vicinity of other wireless devices operating in the 2.4 GHz band.

BO28-300_QM_NA.indb 13 2024/07/25 14:07

EN

- **The Bluetooth transmitter operates in the 2.4 GHz band. The maximum radio-frequency power is 4.613 mW.**
- **This device operates on the same frequency as commercial, educational, and medical devices and wireless transmitters.**
  It also operates on the same frequency as licensed transmitters and special unlicensed low-voltage transmitters used in radio-frequency identification tracking systems for assembly lines and in other similar applications.
- **To prevent interference with the above devices, observe the following precautions.**
  Confirm that the radio-frequency identification transmitter is not in operation before using this device. If you notice that this device causes interference in low-voltage radio-frequency identification tracing systems, contact a FUJIFILM representative.
- **The following may be punishable by law:**
  – Disassembly or modification of this device.
  – Removal of device certification labels.
- **Trademark Information**
  The Bluetooth® word mark and logos are registered trademarks owned by the Bluetooth SIG, Inc., and any use of such marks by FUJIFILM is under license.

For customers in the USA

FCC ID : W2Z-03000013

FCC Statement

This device complies with part 15 of the FCC Rules. Operation is subject to the following two conditions: (1) This device may not cause harmful interference, and (2) this device must accept any interference received, including interference that may cause undesired operation.
For more information, access the website below.
https://instax.com/wide_evo/en/spec.html

CAUTION

This equipment has been tested and found to comply with the limits for a Class B digital device, pursuant to Part 15 of the FCC Rules. These limits are designed to provide reasonable protection against harmful interference in a residential installation. This equipment generates, uses, and can radiate radio frequency energy and, if not installed and used in accordance with the instructions, may cause harmful interference to radio communications. However, there is no guarantee that interference will not occur in a particular installation. If this equipment does cause harmful interference to radio or television, which can be determined by turning the equipment off and on, the user is encouraged to try to correct the interference by one or more of the following measures:

- Reorient or relocate the receiving antenna.
- Increase the separation between the equipment and receiver.
- Connect the equipment into an outlet on a circuit different from that to which the receiver is connected.
- Consult the dealer or an experienced radio/TV technician for help.

Changes or modifications not expressly approved by FUJIFILM responsible for compliance could void the user's authority to operate the equipment.
This transmitter must not be co-located or operated in conjunction with any other antenna or transmitter.
The available scientific evidence does not show that any health problems are associated with using low power wireless devices. There is no proof, however, that these low power wireless devices are absolutely safe. Low power wireless devices emit low levels of radio frequency energy (RF) in the microwave range while being used. Whereas high levels of RF can produce health effects (by heating tissue), exposure of low-level RF that does not produce heating effects causes no known adverse health effects. Many studies of low-level RF exposures have not found any biological effects. Some studies have suggested that some biological effects might occur, but such findings have not been confirmed by additional research. This device has been tested and found to comply with FCC radiation exposure limits set forth for an uncontrolled environment and meets the FCC radio frequency (RF) Exposure Guidelines.

Notes on the Grant

To comply with Part 15 of the FCC Rules, this product must be used with a FUJIFILM-specified dedicated charging cable.

For customers in Canada :

IC : 7736B-03000012

ISED statement:

This device complies with Innovation, Science and Economic Development Canada's licence-exempt RSS(s). Operation is subject to the following two conditions:
(1) This device may not cause interference, and
(2) This device must accept any interference, including interference that may cause undesired operation of the device.

CAN ICES-003(B) / NMB-003 (B)

This device contains licence-exempt transmitter(s)/receiver(s) that comply with Innovation, Science and Economic Development Canada's licence-exempt RSS(s). Operation is subject to the following two conditions:

1. This device may not cause interference.
2. This device must accept any interference, including interference that may cause undesired operation of the device.

The available scientific evidence does not show that any health problems are associated with using low power wireless devices. There is no proof, however, that these low power wireless devices are absolutely safe. Low power wireless devices emit

BO28-300_QM_NA.indb 14 2024/07/25 14:07

low levels of radio frequency energy (RF) in the microwave range while being used. Whereas high levels of RF can produce health effects (by heating tissue), exposure of low-level RF that does not produce heating effects causes no known adverse health effects. Many studies of low-level RF exposures have not found any biological effects. Some studies have suggested that some biological effects might occur, but such findings have not been confirmed by additional research. This device has been tested and found to comply with ISED radiation exposure limits set forth for an uncontrolled environment and meets RSS-102 of the ISED radio frequency (RF) exposure rules.

Proper Disposal

Disposal of Electric and Electronic Equipment in Private Households
Disposal of used Electrical & Electronic Equipment
(Applicable in the European Union and other European countries with separate collection systems)

This symbol on the product, or in the manual and in the limited product warranty, and/or on its packaging indicates that this product shall not be treated as household waste.
Instead it should be taken to an applicable collection point for the recycling of electrical and electronic equipment.
By ensuring this product is disposed of correctly, you will help prevent potential negative consequences to the environment and human health, which could otherwise be caused by inappropriate waste handling of this product.
The recycling of materials may help to conserve natural resources. For more detailed information about recycling of this product, please contact your local city recycling office, your household waste disposal service or the authorized FUJIFILM dealer from which you purchased the product or contact FUJIFILM at the address below.
For proper disposal in the United States at product end-of-life, please contact 1-800-800-3854 Option #1 Help Desk.
In Countries outside of the US: If you wish to discard this product, please contact your local authorities and ask for the correct way of disposal.

Information for FUJIFILM in the United States
FUJIFILM North America Corp.
200 Summit Lake Drive
Valhalla, New York 10595, USA

Information for FUJIFILM in Canada
FUJIFILM Canada Inc.
600 Suffolk Court, Mississauga, Ontario L5R 4G4, Canada

EN If you have any inquiries about this product, please contact a FUJIFILM authorized Dealer, or access the website below.

FR Si vous avez des questions sur ce produit, veuillez vous adresser à un distributeur FUJIFILM autorisé, ou consultez le site web ci-dessous.

ES Si tiene alguna pregunta sobre este producto, consulte la información en la tarjeta de servicio adjunto o visite el siguiente sitio web.

https://global.fujifilm.com/

FUJIFILM

FUJIFILM Corporation
7-3, AKASAKA 9-CHOME, MINATO-KU, TOKYO 107-0052, JAPAN